National Semiconductor

PRELIMINARY
February 1995

PC87303VUL SuperI/O™ Sidewinder Lite Floppy Disk Controller, Keyboard Controller, Real-Time Clock, Dual UARTs, IEEE 1284 Parallel Port, and IDE Interface

General Description

The PC87303VUL is a single chip solution incorporating a Keyboard and PS/2® Mouse Controller (KBC), Real Time Clock (RTC) and most commonly used I/O peripherals in ISA, EISA and MicroChannel® based computers. In addition to the KBC and RTC, a Floppy Disk Controller (FDC), two full featured UARTs, an IEEE 1284 compatible parallel port and all the necessary control logic for an IDE interface provides support for most commonly used I/O peripherals. Standard PC-AT® address decoding for all the peripherals, a set of configuration registers, and two user selectable chip selects are also implemented in this highly integrated member of the SuperI/O family. The advanced features and high integration of the PC87303 result in several benefits for low cost, high performance systems. Printed circuit board space savings, fewer components on the motherboard and compatibility with the latest industry standard peripherals are only a few of the benefits of using a PC87303.

The KBC is fully software compatible with the 8042AH microcontroller. It contains system timing, control logic, custom ROM program memory, RAM data memory and 18 programmable I/O lines necessary to implement dedicated control functions. It is an efficient controller which uses predominantly single byte instructions with support for binary and BCD arithmetic and extensive bit handling capabilities.

(Continued)

Features

- The Floppy Disk Controller:
  - — Software compatible with the DP8477, the 765A and the N82077
  - — 16-byte FIFO (disabled by default)
  - — Burst and Non-Burst modes
  - — Perpendicular Recording drive support
  - — High performance internal analog data separator (no external filter components required)
  - — Low power CMOS with power-down mode
  - — Automatic media-sense support with full IBM TDR (Tape Drive Register) implementation for PC-AT and PS/2 floppy drive types
- The Keyboard Controller:
  - — 8042AH and PC87911 software compatible
  - — 8-bit Microcomputer with 2 kbytes custom ROM and 256 bytes data RAM
  - — Asynchronous access to two data registers and one status register during normal operation
  - — Dedicated open drain outputs for keyboard controller application
  - — Supports both interrupt and polling
  - — Supports DMA handshake
  - — 18 programmable I/O pins
  - — 4 dedicated open-drain outputs
  - — 8-bit Timer/Counter
  - — Binary and BCD arithmetic
  - — Expandable I/O

(Continued)

Block Diagram

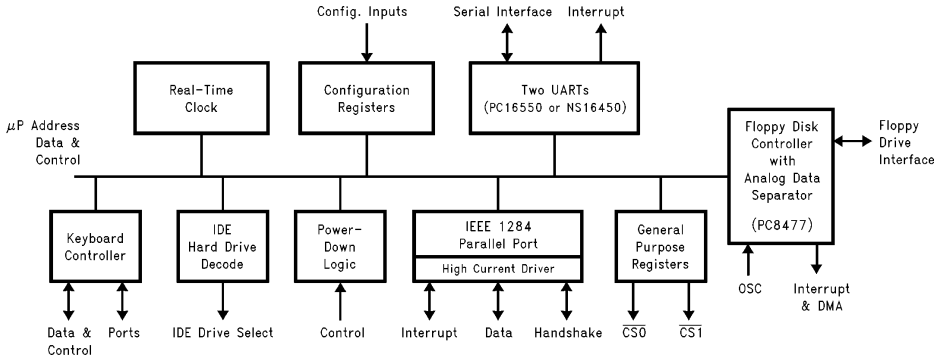

TL/C/12074–1

TRI-STATE® is a registered trademark of National Semiconductor Corporation.
SuperI/O™ is a trademark of National Semiconductor Corporation.
MicroChannel®, PC-AT® and PS/2® are registered trademarks of International Business Machines Corporation.

©1995 National Semiconductor Corporation TL/C/12074

RRD-B30M75/Printed in U. S. A.

General Description (Continued)

The RTC is a low-power design that provides a time-of-day clock, a 100-year calendar, several alarm features and 242 bytes of general purpose RAM. An external battery is used to maintain the time and contents of the general purpose RAM, when power is removed from the PC87303. The PC87303 RTC is compatible with the DS1287 and MC146818 RTC devices.

The PC87303 FDC uses a high performance analog data separator eliminating need for any external filter components. The FDC is fully compatible with the PC8477 and incorporates a superset of DP8473, NEC μPD765 and N82077 floppy disk controller function. All popular 5.25″ and 3.5″ floppy drives, including 2.88 MB 3.5″ floppy drive, are supported. Full TDR support for PC-AT and PS/2 floppy drive types is also provided.

The two UARTs are fully NS16450 and NS16550 compatible.

The parallel port is fully IEEE 1284 level 2 compatible. The SPP (Standard Parallel Port) is fully compatible with ISA, EISA and MicroChannel parallel ports. In addition to the SPP, EPP (Enhanced Parallel Port) and ECP (Extended Capabilities Port) modes are supported by the parallel port.

All IDE control signals with DMA support, including support for Type F DMA are provided by the PC87303. Only external signal buffers are required to implement a complete IDE interface.

A set of fourteen configuration registers are provided to control various functions of the PC87303. These registers are accessed using two 8-bit wide index and data registers. The ISA I/O address of the register pair can be relocated using a power-up strapping option.

Two general purpose user programmable chip selects are available. These chip selects can be used to decode game port addresses.

Features (Continued)

- The Real-Time Clock:
  - DS1287, MC146818 and PC87911 compatible
  - 242 bytes battery backed-up CMOS RAM in two banks
  - Selective lock mechanism locks any half of the RTC RAM
  - Calendar in days, day of the week, months and years with automatic leap-year adjustment
  - Time of day in seconds, minutes and hours:
    - 12 or 24 hour format
    - Optional daylight savings adjustment
  - BCD or binary format for time keeping
  - Three individually maskable interrupt event flags:
    - Periodic rates from 122 μs to 500 ms
    - Time-of-day alarm once per second to once per day
  - Separate battery pin, 2.4V operation
  - 2 μA power consumption
  - Double buffer time registers
- The UARTs:
  - Software compatible with the PC16550A and NS16450
- Parallel Port:
  - EPP, ECP compatible with ECP level 2 support
  - ISA, EISA and MicroChannel compatible architecture
  - Bi-directional data transfer under software or hardware control
  - Includes protection circuit to prevent damage to the parallel port when a connected printer is powered up or is operated at a higher voltage
- IDE:
  - All IDE control signals, with DMA and support for Type F DMA. Only external signal buffers are required to implement the full IDE interface
- The Programmable Chip Selects:
  - Separater pins for two user programmable chip select decoders provide ability to control a game port
- The address decoder:
  - Provides selection of all primary and secondary ISA addresses including COM1–4
- General:
  - Low power CMOS technology
  - Ability to stop clocks to all modules
  - The PC87303 is a drop-in replacement for the PC87323VUL
  - Reduced pin leakage current
  - Special configuration register for power-down
  - Disable bit for RTC
  - 160-pin PQFP package

Table of Contents

1.0 PIN DESCRIPTION 10

2.0 CONFIGURATION REGISTERS 16

2.1 Overview 16
2.2 Software Configuration 16
2.3 Hardware Configuration 19
2.4 Index and Data Registers 19
2.5 Base Configuration Registers 21
2.5.1 Function Enable Register 21
2.5.2 Function Address Register 22
2.5.3 Power and Test Register 22
2.5.4 Function Control Register 23
2.5.5 Printer Control Register 23
2.5.6 KBC and BTC Control Register 24
2.5.7 Power Management Control Register 24
2.5.8 Tape, UARTs and Parallel Port Configuration Register 25
2.5.9 SIO Identification Register 25
2.5.10 Advanced SIO Configuration Register 25
2.5.11 Chip Select 0 Configuration Register 0 25
2.5.12 Chip Select 0 Configuration Register 1 25
2.5.13 Chip Select 1 Configuration Register 0 26
2.5.14 Chip Select 1 Configuration Register 1 26
2.6 Power-Down Options 26
2.7 Power-Up Procedure and Considerations 26
2.7.1 Crystal Stabilization 26
2.7.2 UART Power-Up 26
2.7.3 FDC Power-Up 26

3.0 FDC REGISTER DESCRIPTION 27

3.1 FDC Control Registers 28
3.1.1 Status Register A (SRA) 28
3.1.2 Status Register B (SRB) 28
3.1.3 Digital Output Register (DOR) 29
3.1.4 Tape Drive Register (TDR) 29
3.1.5 Main Status Register (MSR) 31
3.1.6 Data Rate Select Register (DSR) 31
3.1.7 Data Register (FIFO) 32
3.1.8 Digital Input Register (DIR) 32
3.1.9 Configuration Control Register (CCR) 33
3.2 Result Phase Status Registers 33
3.2.1 Status Register 0 (ST0) 33
3.2.2 Status Register 1 (ST1) 33
3.2.3 Status Register 2 (ST2) 34
3.2.4 Status Register 3 (ST3) 34

4.0 FDC COMMAND SET DESCRIPTION 34

4.1 Command Descriptions 34
4.1.1 Configure Command 34
4.1.2 Dumpreg Command 35
4.1.3 Format Track Command 35
4.1.4 Invalid Command 38
4.1.5 Lock Command 38
4.1.6 Mode Command 38
4.1.7 NSC Command 39
4.1.8 Perpendicular Mode Command 40
4.1.9 Read Data Command 41
4.1.10 Read Deleted Data Command 43
4.1.11 Read ID Command 43
4.1.12 Read A Track Command 43
4.1.13 Recalibrate Command 44
4.1.14 Relative Seek Command 44
4.1.15 Scan Commands 45
4.1.16 Seek Command 46
4.1.17 Sense Drive Status Command 46
4.1.18 Sense Interrupt Command 46
4.1.19 Set Track Command 47
4.1.20 Specify Command 47
4.1.21 Verify Command 48
4.1.22 Version Command 49
4.1.23 Write Data Command 50
4.1.24 Write Deleted Data Command 50
4.2 Command Set Summary 51
4.3 Mnemonic Definitions for FDC Commands 56

5.0 FDC FUNCTIONAL DESCRIPTION 57

5.1 Microprocessor Interface 57
5.2 Modes of Operation 57
5.3 Controller Phases 57
5.3.1 Command Phase 57
5.3.2 Execution Phase 57
5.3.2.1 DMA Mode—FIFO Disabled 58
5.3.2.2 DMA Mode—FIFO Enabled 58
5.3.2.3 Interrupt Mode—FIFO Disabled 59
5.3.2.4 Interrupt Mode—FIFO Enabled 59
5.3.2.5 Software Polling 59
5.3.3 Result Phase 59
5.3.4 Idle Phase 59
5.3.5 Drive Polling Phase 60
5.4 Data Separator 60
5.5 Crystal Oscillator 62
5.6 Perpendicular Recording Mode 62
5.7 Data Rate Selection 64
5.8 Write Precompensation 64
5.9 FDC Low Power Mode Logic 64
5.10 Reset Operation 64

Table of Contents (Continued)

6.0 SERIAL PORTS 65
6.1 Serial Port Registers 65
6.2 Line Control Register 65
6.3 Programmable Baud Rate Generator 68
6.4 Line Status Register 69
6.5 FIFO Control Register 70
6.6 Interrupt Identification Register 70
6.7 Interrupt Enable Register 70
6.8 MODEM Control Register 70
6.9 MODEM Status Register 72
6.10 Scratchpad Register 72

7.0 PARALLEL PORT 72
7.1 Introduction 72
7.2 Data Register (DTR) 73
7.3 Status Register (STR) 73
7.4 Control Register (CTR) 74
7.5 Enhanced Parallel Port Operation 74
7.6 Extended Capabilities Parallel Port 79
7.6.1 Introduction 79
7.6.2 Software Operation 80
7.7 Register Definitions 80
7.8 Software Controlled Data Transfer 82
7.9 Automatic Data Transfer 82
7.9.1 Forward Direction 82
7.9.2 ECP Forward Write Cycle 82
7.9.3 Backward Direction 82
7.9.4 ECP Backward Read Cycle 82
7.10 FIFO Test Access (Mode 110) 83
7.11 Configuration Registers Access 83
7.12 Interrupt Generation 83

8.0 INTEGRATED DEVICE ELECTRONICS INTERFACE (IDE) 83
8.1 Introduction 83
8.2 IDE Signals 83

9.0 KEYBOARD CONTROLLER AND REAL-TIME CLOCK 85
9.1 PC87303 KBC Function 85
9.1.1 Host System Interface 86
9.1.2 Program Memory 87
9.1.3 Data Memory and Registers 87
9.1.4 I/O Interface 88
9.1.5 Timer/Counter 89
9.1.6 Interrupts 89
9.1.7 Oscillator and Instruction Timing 90
9.2 Real Time Clock Function 91
9.2.1 Memory Map 91
9.2.2 Bus Interface 91
9.2.3 Time Generation 91
9.2.4 Time Keeping 92
9.2.5 RAM 93
9.2.6 Power Management 93
9.2.7 System Bus Lock Out and Power-Up Detection 93
9.2.8 Oscillator 93
9.2.9 Interrupt Handling 93
9.2.10 Control Registers 94

10.0 ELECTRICAL CHARACTERISTICS 96
10.1 DC Electrical Characteristics 96
10.1.1 Microprocessor, Parallel Port, and IDE Interface Pins 97
10.1.2 Disk Interface Pins 97
10.1.3 Oscillator Pins 97
10.1.4 Parallel Port Pins 97
10.1.5 Keyboard Controller and Real-Time Clock Pins 98
10.2 AC Electrical Characteristics 98
10.2.1 AC Test Conditions 98
10.2.2 Clock Timing 99
10.2.3 Microprocessor Interface Timing 100
10.2.4 Baud Out Timing 102
10.2.5 Transmitter Timing 102
10.2.6 Receiver Timing 103
10.2.7 MODEM Control Timing 104
10.2.8 DMA Timing 105
10.2.9 Reset Timing 107
10.2.10 FDC Write Data Timing 107
10.2.11 FDC Read Data Timing 108
10.2.12 Drive Control Timing 108
10.2.13 IDE Timing 108
10.2.14 Parallel Port Timing 109
10.2.15 Enhanced Parallel Port Timing 110
10.2.16 Extended Capabilities Port Timing 111
10.2.17 RTC 112
10.2.18 Programmable Chip Select Timing 113

List of Figures

FIGURE 2-1 PC87303 Configuration Registers . . . 17
FIGURE 2-2 PC87303 Four Floppy Drive Circuit . . . 21
FIGURE 3-1 FDC Functional Block Diagram . . . 27
FIGURE 4-1 FDC Command Structure . . . 34
FIGURE 4-2 IBM, Perpendicular, and ISO Formats Supported by Format Command . . . 37
FIGURE 5-1 FDC Data Separator Block Diagram . . . 61
FIGURE 5-2 PC87303 Dynamic Window Margin Performance . . . 62
FIGURE 5-3 Read Data Algorithm—State Diagram . . . 63
FIGURE 5-4 Perpendicular Recording Drive R/W Head and Pre-Erase Head . . . 63
FIGURE 6-1 PC87303 Composite Serial Data . . . 65
FIGURE 6-2 Receiver FIFO Trigger Level . . . 70
FIGURE 7-1 EPP 1.7 Address Write . . . 76
FIGURE 7-2 EPP 1.7 Address Read . . . 76
FIGURE 7-3 EPP Write with ZWS . . . 77
FIGURE 7-4 EPP 1.9 Address Write . . . 77
FIGURE 7-5 EPP 1.9 Address Read . . . 78
FIGURE 7-6 ECP Forward Write Cycle . . . 82
FIGURE 7-7 ECP Backward Read Cycle . . . 82
FIGURE 8-1 IDE Interface Signal Equations (Non-DMA) . . . 84
FIGURE 9-1 Keyboard Controller Functional Block Diagram . . . 84
FIGURE 9-2 Keyboard Controller to Host System Interface . . . 86
FIGURE 9-3 Status Register . . . 86
FIGURE 9-4 PSW Register Bits . . . 87
FIGURE 9-5 Keyboard Controller Data Memory Map . . . 87
FIGURE 9-6 Keyboard Controller Stack Organization . . . 87
FIGURE 9-7 Active Pull-Up I/O Port Structure . . . 88
FIGURE 9-8 Using Port Pins as Inputs . . . 88
FIGURE 9-9 Timing Generation and Timer Circuit . . . 89
FIGURE 9-10 Internal Clock Connection . . . 90
FIGURE 9-11 External Clock Connection . . . 90
FIGURE 9-12 Instruction Cycle Timing . . . 90
FIGURE 9-13 Oscillator Internal and External Circuitry . . . 92
FIGURE 9-14 Interrupt/Status Timing . . . 92
FIGURE 9-15 Typical Battery Configuration . . . 93
FIGURE 9-16 Typical Battery Current During Battery Backed Mode . . . 93
FIGURE 10-1 Clock Timing . . . 99
FIGURE 10-2 Microprocessor Read Timing . . . 101
FIGURE 10-3 Microprocessor Write Timing . . . 101
FIGURE 10-4 Read after Write Operation to All Registers and RAM Timing . . . 101
FIGURE 10-5 Baud Out Timing . . . 102
FIGURE 10-6 Transmitter Timing . . . 102
FIGURE 10-7 Sample Clock Timing . . . 103
FIGURE 10-8 Receiver Timing . . . 103
FIGURE 10-9 FIFO Mode Receiver Timing . . . 103
FIGURE 10-10 Timeout Receiver Timing . . . 104
FIGURE 10-11 MODEM Control Timing . . . 104
FIGURE 10-12a FDC DMA Timing . . . 105
FIGURE 10-12b ECP DMA Timing . . . 106

List of Figures (Continued)

FIGURE 10-13 Reset Timing 107
FIGURE 10-14 Write Data Timing 107
FIGURE 10-15 Read Data Timing 108
FIGURE 10-16 Drive Control Timing 108
FIGURE 10-17 IDE Timing 108
FIGURE 10-18 Compatible Mode Parallel Port Interrupt Timing 109
FIGURE 10-19 Extended Mode Parallel Port Interrupt Timing 109
FIGURE 10-20 Typical Parallel Port Data Exchange 109
FIGURE 10-21 Enhanced Parallel Port Timing 110
FIGURE 10-22 ECP Parallel Port Forward Timing Diagram 111
FIGURE 10-23 ECP Parallel Port Backward Timing Diagram 111
FIGURE 10-24 $\overline{IRQ}$ Release Delay 112
FIGURE 10-25 PWRGOOD V_{CC} Timing 112
FIGURE 10-26 PWRGOOD MR Timing 112
FIGURE 10-27 Chip Select Timing 113

List of Tables

TABLE 1-1 Pin Descriptions (Alphabetical) 10
TABLE 2-1 Default Configurations Controlled by Hardware 19
TABLE 2-2 Index and Data Register Optional Locations 19
TABLE 2-3 Encoded Drive and Motor Pin Information 21
TABLE 2-4 Primary and Secondary Drive Address Selection 22
TABLE 2-5 Parallel Port Addresses 22
TABLE 2-6 COM Port Selection for UART1 22
TABLE 2-7 COM Port Selection for UART2 22
TABLE 2-8 Address Selection for COM3 and COM4 22
TABLE 2-9 Logical Drive Exchange 23
TABLE 2-10 Parallel Port Mode 23
TABLE 3-1 Register Description and Addresses 28
TABLE 3-2 Drive Enable Values 29
TABLE 3-3 TDR Operation Modes 30
TABLE 3-4 Media ID Bit Functions 30
TABLE 3-5 Tape Drive Assignment Values 30
TABLE 3-6 Write Precompensation Delays 31
TABLE 3-7 Default Precompensation Delays 32
TABLE 3-8 Data Rate Select Encoding 32
TABLE 4-1 Typical Format GAP3 Length Values Based on Drive Data Rate 36
TABLE 4-2 Typical Format GAP3 Length Values Based on PC Compatible Diskette Media 36
TABLE 4-3 DENSEL Default Encoding 39
TABLE 4-4 DENSEL Encoding 39
TABLE 4-5 Head Settle Time Calculation 39
TABLE 4-6 Effect of Drive Mode and Data Rate on Format and Write Commands 40
TABLE 4-7 Effect of GAP and WG on Format and Write Commands 40
TABLE 4-8 Sector Size Selection 41
TABLE 4-9 SK Effect on the Read Data Command 42
TABLE 4-10 Result Phase Termination Values with No Error 42
TABLE 4-11 SK Effect on Read Deleted Data Command 43
TABLE 4-12 Maximum Recalibrate Step Pulses Based on R255 and ETR 44
TABLE 4-13 Scan Command Termination Values 45
TABLE 4-14 Status Register 0 Termination Codes 47
TABLE 4-15 Set Track Register Address 47
TABLE 4-16 Step Rate Time (SRT) Values 47

List of Tables (Continued)

TABLE 4-17 Motor Off Time (MFT) Values . . . 48
TABLE 4-18 Motor On Time (MNT) Values . . . 48
TABLE 4-19 Verify Command Result Phase . . . 49
TABLE 6-1 PC87303 UART Register Addresses (AEN = 0) . . . 65
TABLE 6-2 PC87303 Register Summary for an Individual UART Channel . . . 67
TABLE 6-3 PC87303 UART Reset Configuration . . . 68
TABLE 6-4 PC87303 UART Divisors, Baud Rates, and Clock Frequencies . . . 68
TABLE 6-5 PC87303 Interrupt Control Functions . . . 71
TABLE 7-1 Parallel Interface Register Addresses . . . 72
TABLE 7-2 Standard Parallel Port Modes Selection . . . 72
TABLE 7-3 SPP Data Register Read and Write Modes . . . 72
TABLE 7-4 Parallel Port Reset States . . . 74
TABLE 7-5 EPP Registers . . . 75
TABLE 7-6 Parallel Port Pin Out . . . 78
TABLE 7-7 ECP Registers . . . 79
TABLE 8-1 IDE Registers and Their ISA Addresses . . . 83
TABLE 9-1 Summary of System Interface Operations . . . 86
TABLE 9-2 RTC Memory Map . . . 91
TABLE 10-1 Nominal t_{ICP}, t_{DRP} Values . . . 99
TABLE 10-2 Minimum t_{WDW} Values . . . 107

Basic Configuration

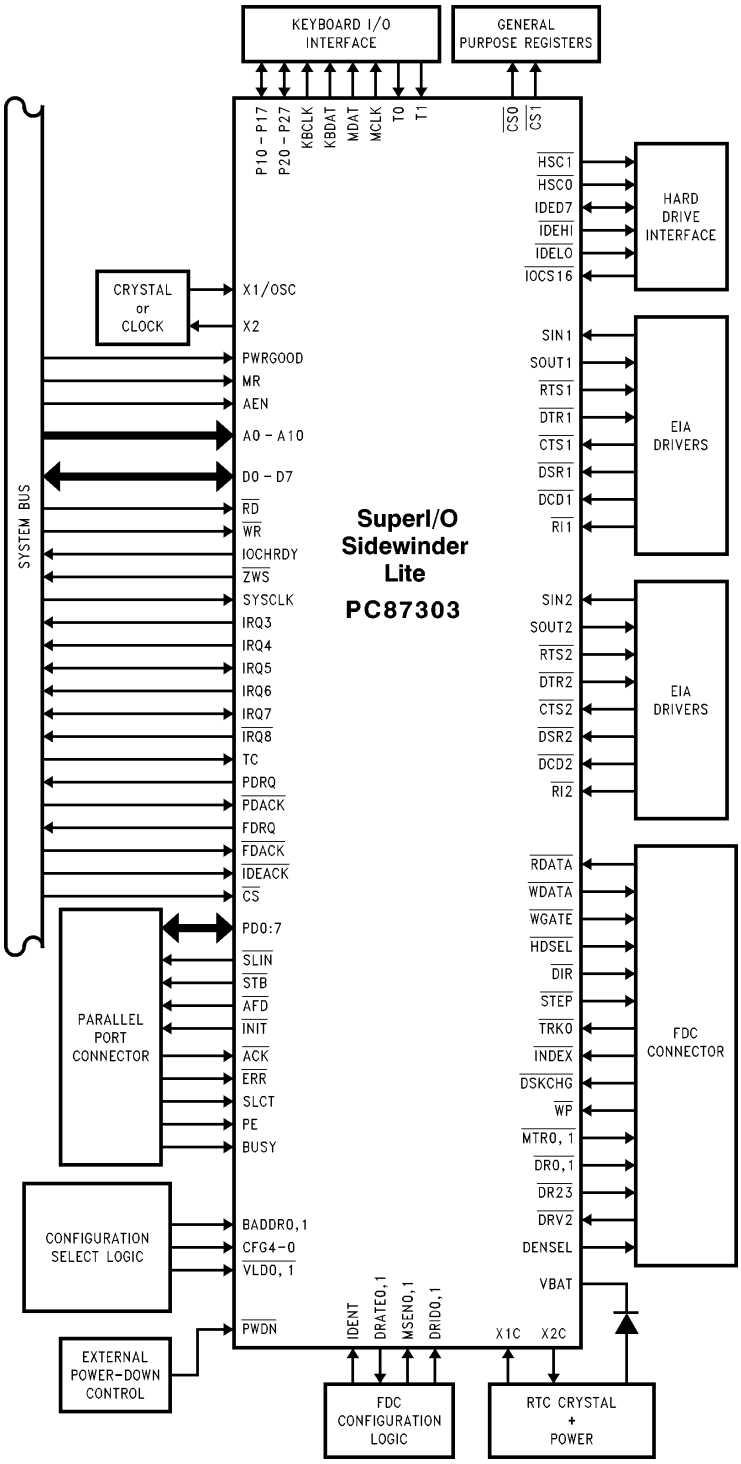

Connection Diagram

Plastic Quad Flatpak

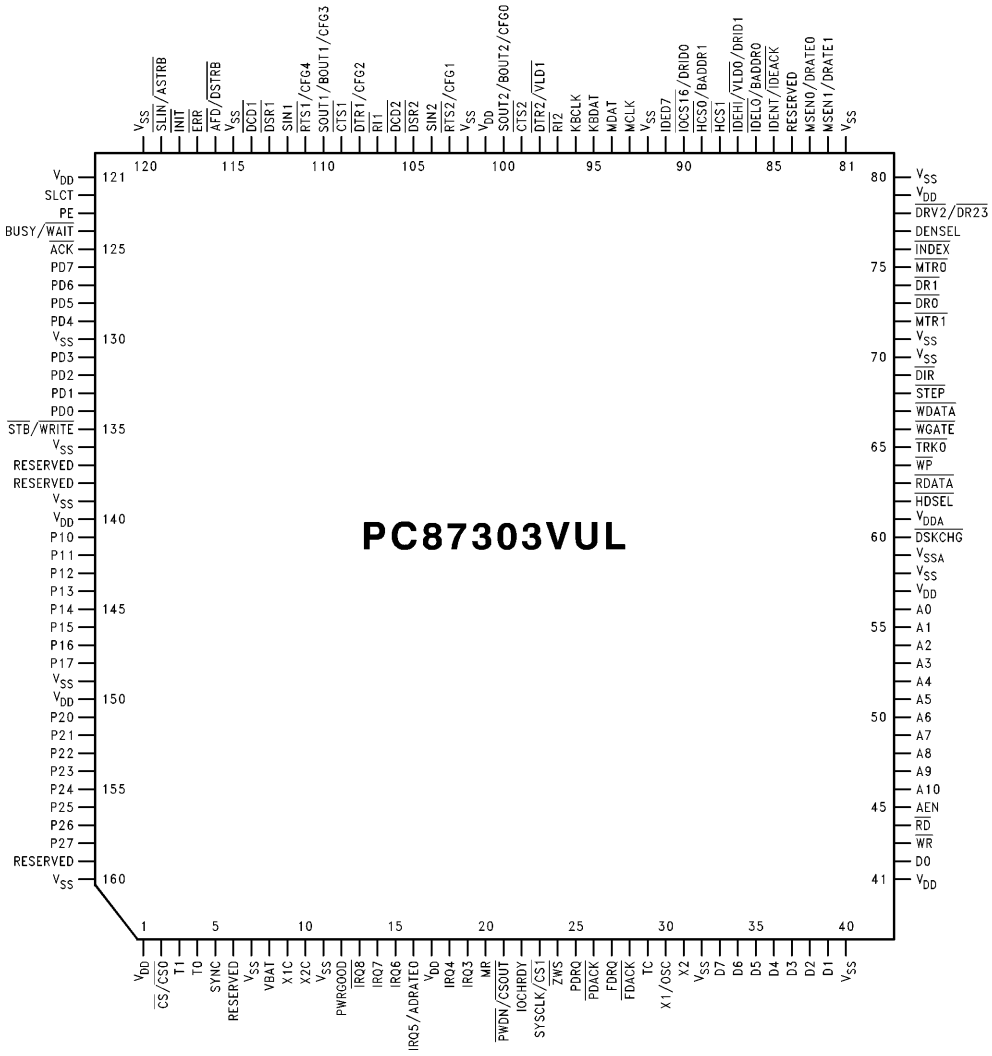

TL/C/12074–3

Note: Do not connect pins marked Reserved.

Order Number PC87303VUL
See NS Package Number VUL160A

1.0 Pin Description

TABLE 1-1. Pin Descriptions (Alphabetical)

Symbol	Pin	I/O	Function
A10–A0	46–56	I	**Address.** These address lines from the microprocessor determine which internal register is accessed. A0–A10 are don't cares during an DMA transfer. A10 is used only during ECP operations.
$\overline{ACK}$	125	I	**Acknowledge.** This input is pulsed low by a connected printer to indicate that it has received data from the parallel port. This pin has a nominal 25 kΩ pull-up resistor attached to it. (See $\overline{DR1}$ and Table 7-5 for further information.)
ADRATE0	16	O	**Additional Data Rate 0.** When selected this output is identical to DRATE0. It is provided in addition to DRATE0. It reflects the currently selected FDC data rate (bit 0 in the Configuration Control Register (CCR) or the Data Rate Select Register (DSR), whichever was written to last). ADRATE0 is configured when bit 0 of Advanced SuperI/O Configuration Register (ASC) is 1. (See IRQ5 for further information.)
$\overline{AFD}$	116	I/O	**Automatic Feed XT.** When this signal is low the printer should automatically line feed after each line is printed. This pin is in a TRI-STATE® condition 10 ns after a 0 is loaded into the corresponding Control Register bit. The system should pull this pin high using a 4.7 kΩ resistor. (See $\overline{DSTRB}$ and Table 7-5 for further information.)
AEN	45	I	**Address Enable.** This input disables function selection via A10–A0 when it is high. Access during DMA transfer is NOT affected by this pin.
$\overline{ASTRB}$	119	O	**Address Strobe.** This signal is used in Enhanced Parallel Port (EPP) mode as an address strobe. It is active low. (See $\overline{SLIN}$ and Table 7-5 for further information.)
BADDR0,1	86, 89	I	**Base Address.** These CMOS inputs are sensed during reset to determine one of four base addresses from which the Index and Data Registers are offset (see Table 2-2). An internal pull-down resistor of 30 kΩ is present on this pin. Use a 10 kΩ resistor to pull this pin to V_{DD}. (See $\overline{IDELO}$, $\overline{HCS0}$ for further information.)
BOUT1,2	110,100	O	**BAUD Output.** This multi-function pin provides the associated serial channel Baud Rate generator output signal when test mode is selected in the Power and Test Configuration Register and the DLAB bit (LCR7) is set. After a Master Reset, this pin provides the Serial Output (SOUT) function. (See SOUT and CFG0–4 for further information.)
BUSY	124	I	**Busy.** This pin is set high by a connected printer when it cannot accept another character. It has a nominal 25 kΩ pull-down resistor attached to it. (See $\overline{WAIT}$ and Table 7-5 for further information.)
CFG0–4	100, 103, 108, 110, 111	I	**Configuration on Power-Up.** These CMOS inputs select 1 of 32 default configurations in which the PC87303 powers-up (see Table 2-1). They are provided with CMOS input buffers. An internal pull-down resistor of 30 kΩ is present on each pin. Use a 10 kΩ resistor to pull these pins to V_{DD}.
$\overline{CS}$	2	I	**Chip Select.** Enables the host to access the keyboard controller through D0–D7, when bit 7 of Chip Select 0 Configuration Register 1 (CS0CF1) is 0. (See $\overline{CS0}$ for further information.)
$\overline{CSOUT}$	21	O	**Chip Select Read Output.** This is the data buffer output enable pin. It indicates any read from the PC87303, except for IDE accesses. This signal is valid when bit 2 of PTR is 1. $\overline{CSOUT}$ is not active during read in PC-AT mode from registers 3F7 and 377. $\overline{CSOUT}$ is not active when the read is from a disabled module. (See PWDN for further information.)
$\overline{CTS1,2}$	109, 99	I	**Clear to Send.** When low, this indicates that the MODEM or data set is ready to exchange data. The $\overline{CTS}$ signal is a MODEM status input whose condition the CPU can test by reading bit 4 (CTS) of the MODEM Status Register (MSR) for the appropriate serial channel. Bit 4 is the complement of the $\overline{CTS}$ signal. Bit 0 (DCTS) of the MSR indicates whether the $\overline{CTS}$ input has changed state since the previous reading of the MSR. $\overline{CTS}$ has no effect on the transmitter. **Note:** Whenever the DCTS bit of the MSR is set an interrupt is generated if MODEM Status interrupts are enabled.
$\overline{CS0,1}$	2, 23	O	**Programmable Chip Select.** $\overline{CS0,1}$ are programmable chip select and/or enable and/or output enable signals that can be used for a game port, I/O port expander or other add-on peripheral. The decoded address and the assertion conditions are configured via the PC87303 configuration registers, 0Ah–0Dh. When either of these two pins is acting as $\overline{CS0,1}$ output enable, the PC87303 assumes the relevant input is 1. (See SYSCLK and $\overline{CS}$ for further information.)
D7–D0	33, 34, 35, 36, 37, 38, 39, 42	I/O	**Data.** Bi-directional data lines to the microprocessor. D0 is the LSB and D7 is the MSB. These signals all have 24 mA (sink) buffered outputs.

1.0 Pin Description (Continued)

TABLE 1-1. Pin Descriptions (Alphabetical) (Continued)

Symbol	Pin	I/O	Function
$\overline{DCD1,2}$	114, 106	I	**Data Carrier Detect.** When low, this signal indicates that the MODEM or data set has detected the data carrier. The $\overline{DCD}$ signal is a MODEM status input whose condition the CPU can test by reading bit 7 (DCD) of the MODEM Status Register (MSR) for the appropriate serial channel. Bit 7 is the complement of the $\overline{DCD}$ signal. Bit 3 (DDCD) of the MSR indicates whether the $\overline{DCD}$ input has changed state since the previous reading of the MSR. **Note:** Whenever the DDCD bit of the MSR is set, an interrupt is generated if MODEM Status interrupts are enabled.
DENSEL	77	O	**Density Select.** Indicates that a high FDC density data rate (500 kbps or 1 Mbps) or a low density data rate (250 kbps or 300 kbps) is selected. DENSEL is active high for high density (5.25″ drives) when IDENT is high, and active low for high density (3.5″ drives) when IDENT is low. DENSEL is also programmable via the Mode command (see Section 4.2.6).
$\overline{DIR}$	69	O	**Direction.** This output determines the direction of the floppy disk drive (FDD) head movement (active = step in, inactive = step out) during a seek operation. During reads or writes, DIR is inactive.
$\overline{DR0,1}$	73, 74	O	**Drive Select 0,1.** These are the decoded Drive Select outputs that are controlled by the Digital Output Register bits D0,D1. The Drive Select outputs are gated with DOR bits 4–7. These are active low outputs. They are encoded with information to control four FDDs when bit 4 of the Function Enable Register (FER) is set. (See $\overline{MTR0,1}$ for more information.)
$\overline{DR23}$	78	O	**Drive 2 or 3.** $\overline{DR23}$ is asserted when either Drive 2 or Drive 3 is accessed (except during logical drive exchange, see bit 3 of TDR). This pin is configured when bit 1 of ASC is 1. (See $\overline{DRV2}$ for further information.)
DRATE0,1	83, 82	O	**Data Rate 0,1.** These outputs reflect the currently selected FDC data rate (bits 0 and 1 in the Configuration Control Register (CCR) or the Data Rate Select Register (DSR), whichever was written to last). These pins are totem-pole buffered outputs (6 mA sink, 6 mA source). (See MSEN0,1 for further information.)
DRID0,1	90, 87	I	**Drive ID.** These pins accept input from the floppy disk drive which indicates the type of drive in use. These pins should be tied low if they are not used. DRID0,1 is configured when bit 2 of ASC is 1. (See $\overline{IOCS16}$, $\overline{IDEHI}$, and $\overline{VLD0}$ for further information.)
$\overline{DRV2}$	78	I	**Drive2.** This input indicates whether a second floppy disk drive has been installed. The state of this pin is available from Status Register A in PS/2 mode. This pin is confgured when bit 1 of ASC is 0. (See $\overline{DR23}$ for further information.)
$\overline{DSKCHG}$	60	I	**Disk Change.** This input indicates if the drive door has been opened. The state of this pin is available from the Digital Input register. This pin can also be configured as the Read Gate (RGATE) data separator diagnostic input via the Mode command (see Section 4.2.6).
$\overline{DSR1,2}$	113, 105	I	**Data Set Ready.** When low, this signal indicates that the data set or MODEM is ready to establish a communications link. The $\overline{DSR}$ signal is a MODEM status input whose condition the CPU can test by reading bit 5 (DSR) of the MODEM Status Register (MSR) for the appropriate channel. Bit 5 is the complement of the $\overline{DSR}$ signal. Bit 1 (DDSR) of the MSR indicates whether the $\overline{DSR}$ input has changed state since the previous reading of the MSR. **Note:** Whenever the DDSR bit of the MSR is set, an interrupt is generated if MODEM Status interrupts are enabled.
$\overline{DSTRB}$	116	O	**Data Strobe.** This signal is used in EPP mode as a data strobe. It is active low. (See $\overline{AFD}$ and Table 7-5 for further information.)
$\overline{DTR1,2}$	108, 98	O	**Data Terminal Ready.** When low, this output indicates to the MODEM or data set that the UART is ready to establish a communications link. The $\overline{DTR}$ signal can be set to an active low by programming bit 0 (DTR) of the MODEM Control Register to a high level. A Master Reset operation sets this signal to its inactive (high) state. Loop mode operation holds this signal to its inactive state. (See CFG0–4 for further information.)
$\overline{ERR}$	117	I	**Error.** A connected printer sets this input low when it has detected an error. This pin has a nominal 25 kΩ pull-up resistor attached to it.
$\overline{FDACK}$	28	I	**DMA Acknowledge.** Active low input to acknowledge the FDC DMA request and enable the $\overline{RD}$ and $\overline{WR}$ inputs during a DMA transfer. When in PC-AT or Model 30 mode, this signal is enabled by bit D3 of the Digital Output Register (DOR). When in PS/2 mode, $\overline{FDACK}$ is always enabled, and bit D3 of the DOR is reserved. $\overline{FDACK}$ should be held high during I/O accesses.

1.0 Pin Description (Continued)

TABLE 1-1. Pin Descriptions (Alphabetical) (Continued)

Symbol	Pin	I/O	Function
FDRQ	27	O	**DMA Request.** Active high output to signal the DMA controller that a FDC data transfer is needed. When in PC-AT or Model 30 mode, this signal is enabled by bit D3 of the DOR. When in PS/2 mode, FDRQ is always enabled, and bit D3 of the DOR is reserved.
$\overline{\text{HCS0}}$	89	O	**Hard Drive Chip Select 0.** This output is active in the PC-AT mode when 1) the hard drive registers from 1F0–1F7h are selected and the primary address is used or 2) when the hard drive registers from 170–177h are selected and the secondary address is used. This output is inactive if the IDE interface is disabled via the Configuration Register. (See BADDR1 for further information.)
$\overline{\text{HCS1}}$	88	O	**Hard Drive Chip Select 1.** This output is active in the PC-AT mode when 1) the hard drive registers from 3F6–7 are selected and the primary address is used or 2) the hard drive registers from 376–377 are selected and the secondary address is used. This output is also inactive, if the IDE interface is disabled via the Configuration Register.
$\overline{\text{HDSEL}}$	62	O	**Head Select.** This output determines which side of the FDD is accessed. When Active, the head selects side 1. When inactive, the head selects side 0.
$\overline{\text{IDEACK}}$	85	I	**IDE DMA Acknowledge.** This is the IDE DMA acknowledge input pin when bit 1 of FCR is 1. In this case the DENSEL polarity is active high (IDENT assumed 1). This pin is the IDENT input pin when bit 1 of FCR is 0. (See IDENT pin for further information.)
IDED7	91	I/O	**IDE Bit 7.** This pin provides the data bus bit 7 signal to the IDE hard drive during accesses in the address range 1F0–1F7h, 170–177h, 3F6h and 376h. This pin is TRI-STATE during read or write accesses to 3F7h and 377h.
$\overline{\text{IDEHI}}$	87	O	**IDE High Byte.** This output enables the high byte data latch during a read or write to the hard drive if the hard drive returns $\overline{\text{IOCS16}}$. This output is inactive if the IDE interface is disabled via the Configuration Register. (See $\overline{\text{VLD0}}$ and DRID1 for further information.)
$\overline{\text{IDELO}}$	86	O	**IDE Low Byte.** This output enables the low byte data latch during a read or write to the hard drive. This output is inactive if the IDE interface is disabled via the Configuration Register. (See BADDR0 for further information.)
IDENT	85	I	**Identity.** After chip reset, the state of IDENT determines the polarity of the DENSEL output. When IDENT is a logic ''1'', DENSEL is active high for the 500 kbps and 1 Mbps data rates. When IDENT is a logic ''0'', DENSEL is active low for the 500 kbps and 1 Mbps data rates. (See Mode command for explanation of DENSEL.) (See $\overline{\text{IDEACK}}$ for further information.)
$\overline{\text{INDEX}}$	76	I	**Index.** This input signals the beginning of a FDD track.
$\overline{\text{INIT}}$	118	I/O	**Initialize.** When this signal is low it causes a connected printer to be initialized. This pin is in a TRI-STATE condition 10 ns after a 1 is loaded into the corresponding Control Register bit. The system should pull this pin high using a 4.7 kΩ resistor.
IOCHRDY	22	O	**I/O Channel Ready.** This is the I/O Channel Ready open drain output. When IOCHRDY is driven low, the EPP extends the host cycle.
$\overline{\text{IOCS16}}$	90	I	**I/O Chip Select 16-Bit.** This input is driven by a connected peripheral device which can accommodate a 16-bit access. This pin is configured when bit 2 of ASC is 0. (See DRID0 for further information.)
IRQ3,4	19, 18	O	**Interrupt 3 and 4.** These are active high interrupts associated with the serial ports. IRQ3 presents the signal if the serial channel has been designated as COM2 or COM4. IRQ4 presents the signal if the serial port is designated as COM1 or COM3. The appropriate interrupt goes active whenever it is enabled via the Interrupt Enable Register (IER), the associated Interrupt Enable bit (Modem Control Register bit 3, MCR3), and any of the following conditions are active: Receiver Error, Receive Data available, Transmitter Holding Register Empty, or a Modem Status Flag is set. The interrupt signal is reset low (inactive) after the appropriate interrupt service routine is executed, after being disabled via the IER, or after a Master Reset. Either interrupt can be disabled, putting them into TRI-STATE, by setting the MCR3 bit low.

1.0 Pin Description (Continued)

TABLE 1-1. Pin Descriptions (Alphabetical) (Continued)

Symbol	Pin	I/O	Function
IRQ5	16	I/O	**Interrupt 5.** Active high output that indicates a parallel port interrupt. When enabled this bit follows the $\overline{ACK}$ signal input. When bit 4 in the parallel port Control Register is set and the parallel port address is designated as shown in Table 2-5, this interrupt is enabled. When it is not enabled this signal is TRI-STATE. This pin is I/O only when ECP is enabled, IRQ5 is configured, and bit 6 of PCR is 1. (See ADRATE0 for further information.)
IRQ6	15	O	**Interrupt 6.** Active high output to signal the completion of the execution phase for certain FDC commands. Also used to signal when a data transfer is ready during a Non-DMA operation. When in PC-AT or Model 30 mode, this signal is enabled by bit D3 of the DOR. When in PS/2 mode, IRQ6 is always enabled, and bit D3 of the DOR is reserved.
IRQ7	14	I/O	**Interrupt 7.** Active high output that indicates a parallel port interrupt. When enabled this bit follows the $\overline{ACK}$ signal input. When bit 4 in the parallel port Control Register is set and the parallel port address is designated as shown in Table 2-5, this interrupt is enabled. When it is not enabled this signal is TRI-STATE. This pin is I/O only when ECP is enabled, IRQ7 is configured, and bit 6 of PCR is 1. For ECP operation, refer to the interrupt ECP Section 7.11.1
$\overline{IRQ8}$	13	O	**Interrupt 8.** Real-Time Clock interrupt request output. This is an open-drain output.
KBCLK	96	O	**Keyboard Clock** output.
KBDAT	95	O	**Keyboard Data** output.
MCLK	93	O	**Mouse Clock** output.
MDAT	94	O	**Mouse Data** output.
MR	20	I	**Master Reset.** Active high input that resets the controller to the idle state, and resets all disk interface outputs to their inactive states. The DOR, DSR, CCR, Mode command, Configure command, and Lock command parameters are cleared to their default values. The Specify command parameters are not affected. The Configuration Registers are set to their selected default values.
$\overline{MTR0,1}$	75, 72	O	**Motor Select 0,1.** These are the motor enable lines for drives 0 and 1, and are controlled by bits D7–D4 of the Digital Output register. They are active low outputs. They are encoded with information to control four FDDs when bit 4 of the Function Enable Register (FER) is set. $\overline{MTR0}$ exchanges logical motor values with $\overline{MTR1}$ when bit 4 of FCR is set. (See $\overline{DR0,1}$.)
MSEN0,1	83, 82	I	**Media Sense.** These pins are Media Sense input pins when bit 0 of FCR is 0. Each pin has a 40 kΩ internal pull-up resistor. When bit 0 of FCR is 1, these pins are Data Rate output pins, and the pull-up resistors are disabled. (See DRATE0,1 for further information.)
P10–P17	141–148	I/O	**I/O Port.** Quasi-bidirectional port for general purpose input and output.
P20–P27	151–158	I/O	**I/O Port.** Quasi-bidirectional port for general purpose input and output.
PD0–7	134–131, 129–126	I/O	**Parallel Port Data.** These bidirectional pins transfer data to and from the peripheral data bus and the parallel port Data Register. These pins have high current drive capability. (See DC Electrical Characteristics.)
$\overline{PDACK}$	26	I	**Printer DMA Acknowledge.** Active low input to acknowledge a connected printer's DMA request, and enable the $\overline{RD}$ and $\overline{WR}$ inputs during a DMA transfer. This input is valid only in Enhanced Capabilities Port (ECP) mode.
PDRQ	25	O	**Printer DMA Request.** Active high output which signals the DMA controller that a printer data transfer is required. This pin is in TRI-STATE when ECP is disabled (PCR2 = 0) or when it is configured without DMA (PMC3 = 0). This output is valid only in ECP mode.

1.0 Pin Description (Continued)

TABLE 1-1. Pin Descriptions (Alphabetical) (Continued)

Symbol	Pin	I/O	Function
$\overline{\text{PDWN}}$	21	I	**Power-Down.** This multi-function pin stops the clocks and/or the external crystal based on the selections made in the Power and Test Register (PTR) bits 1 and 2. (See $\overline{\text{CSOUT}}$ for additional information.)
PE	123	I	**Paper End.** This input is set high by a connected printer which is out of paper. This pin has a nominal 25 kΩ pull-down resistor attached to it.
PWRGOOD	12	I	**Power Supply Good.** An input to the PC87303 indicating that the power supply is good. This input should be held low until the power supply is stable.
$\overline{\text{RD}}$	44	I	**Read.** Active low input to signal a data read by the microprocessor.
$\overline{\text{RDATA}}$	63	I	**Read Data.** This input is the raw serial data read from the floppy disk drive.
$\overline{\text{RI1,2}}$	107, 97	I	**Ring Indicator.** When low this indicates that a telephone ring signal has been received by the MODEM. The RI signal is a MODEM status input whose condition the CPU can test by reading bit 6 (RI) of the MODEM Status Register (MSR) for the appropriate serial channel. Bit 6 is the complement of the RI signal. Bit 2 (TERI) of the MSR indicates whether the RI input has changed from low to high since the previous reading of the MSR. **Note:** When the TERI bit of the MSR is set, an interrupt is generated if MODEM Status interrupts are enabled.
$\overline{\text{RTS1,2}}$	111, 103	O	**Request to Send.** When low, this output indicates to the MODEM or data set that the UART is ready to exchange data. The $\overline{\text{RTS}}$ signal can be set to an active low by programming bit 1 (RTS) of the MODEM Control Register to a high level. A Master Reset operation sets this signal to its inactive (high) state. Loop mode operation holds this signal to its inactive state. (See CFG0–4 for further information.)
SIN1,2	112, 104	I	**Serial Input.** This input receives composite serial data from the communications link (e.g. peripheral device, MODEM, or data set).
SLCT	122	I	**Select.** When a printer is connected, it sets this input high. This pin has a nominal 25 kΩ pull-down resistor attached to it.
$\overline{\text{SLIN}}$	119	O	**Select Input.** When this signal is low it selects the printer. This pin is a TRI-STATE condition 10 ns after a 0 is loaded into the corresponding Control Register bit. The system should pull this pin high using a 4.7 kΩ resistor.
SOUT1,2	110, 100	O	**Serial Output.** This output sends composite serial data to the communications link (peripheral device, MODEM, or data set). The SOUT signal is set to a marking state (logic 1) after a Master Reset operation. (See BOUT and CFG0–4 for further information.)
$\overline{\text{STB}}$	135	I/O	**Data Strobe.** This output indicates to the printer that valid data is available at the printer port. This pin is in a TRI-STATE condition 10 ns after a zero is loaded into the corresponding Control Register bit. The system should pull this pin high using a 4.7 kΩ resistor. (See $\overline{\text{WRITE}}$ for further information.)
$\overline{\text{STEP}}$	68	O	**Step.** This output signal issues pulses to the disk drive at a software programmable rate to move the head during a seek operation.
SYNC	5	I/O	**Synch.** 32 kHz Real-Time Clock output signal when bit 4 of KRR is 1. SYNC is an input when MR is high and is sampled by the falling edge of MR. It is a TTL strap input buffer. It is sampled to bit 2 of PTR. A 40 kΩ internal pullup resistor is present on this pin.
SYSCLK	23	I	**System Clock.** This input is the system clock when bit 7 of CS1CF0 is 0. (See $\overline{\text{CS1}}$ for further information.)
T0	4	I	**Test 0.** This input can be directly tested by the conditional jump instructions JT0 and JNT0 of the Keyboard Controller.
T1	3	I	**Test 1.** This input can be directly tested by the conditional jump instructions JT1 and JNT1 of the Keyboard Controller. T1 can also be used as the external input to the 8-bit counter/timer of the Keyboard Controller.
TC	29	I	**Terminal Count.** Control signal from the DMA controller to indicate the termination of a DMA transfer. TC is accepted only when $\overline{\text{FDACK}}$ or $\overline{\text{PDACK}}$ is active. TC is active high in PC-AT and Model 30 modes, and active low in PS/2 mode.

1.0 Pin Description (Continued)

TABLE 1-1. Pin Descriptions (Alphabetical) (Continued)

Symbol	Pin	I/O	Function
$\overline{\text{TRK0}}$	65	I	**Track 0.** This input indicates to the controller that the head of the selected floppy disk drive is at track zero.
VBAT	8		**Battery.** Real-Time Clock battery pin.
VDD	1, 17, 41, 57, 79, 101, 121, 140, 150		**Digital Supply.** This is the 5V supply voltage for the digital circuitry.
VDDA	61		**Analog Supply.** This pin is the 5V supply for the analog data separator.
$\overline{\text{VLD0,1}}$	87, 98	I	**Valid Data.** These inputs are sensed during reset, and determine the state of bit 5 in the FDC Tape Drive Register (3F3h). Thus, they determine whether bits 6 and 7 of this register contain valid media id information for floppy drives 0 and 1. If $\overline{\text{VLD0}}$ is sensed low at reset, then whenever drive 0 is accessed, bit 5 of the Tape Drive Register is a 0 indicating that bits 6 and 7 contain valid media id information. If $\overline{\text{VLD0}}$ is sensed high at reset, then whenever drive 0 is accessed, bit 5 of the Tape Drive Register is a 1 indicating that bits 6 and 7 do not contain valid media id information. The same is true of $\overline{\text{VLD1}}$ relative to the media id information for drive 1. If bit 0 of FCR is 1, the $\overline{\text{VLD}}$ bits have no meaning. $\overline{\text{VLD0}}$ value during reset is loaded into bit 0 of FCR (to select between media sense or DRATE). A 30 kΩ internal pulldown resistor is present on each pin. Use a 10 kΩ resistor to pull these pins high during reset. These strap option pins are CMOS input buffers. (See $\overline{\text{IDEHI}}$, DRID1 and $\overline{\text{DTR2}}$ for further information.)
VSSA	59		**Analog Ground.** This is the analog ground for the data separator.
VSS	7, 11, 32, 40, 58, 70, 71, 80, 81, 92, 102, 115, 120, 130, 136, 139, 149, 160		**Digital Ground.** This is the ground for the digital circuitry.
$\overline{\text{WAIT}}$	124	I	**Wait.** This signal is used, in EPP mode, by the parallel port device to extend its access cycle. It is active low. (See BUSY and Table 7-5 for further information.)
$\overline{\text{WR}}$	43	I	**Write.** Active low input to signal to indicate a write from the microprocessor to the controller.
$\overline{\text{WDATA}}$	67	O	**Write Data.** This output is the write precompensated serial data that is written to the selected floppy disk drive. Precompensation is software selectable.
$\overline{\text{WGATE}}$	66	O	**Write Gate.** This output signal enables the write circuitry of the selected disk drive. $\overline{\text{WGATE}}$ has been designed to prevent glitches during power up and power-down. This prevents writing to the disk when power is cycled.
$\overline{\text{WP}}$	64	I	**Write Protect.** This input indicates that the floppy disk in the selected drive is write protected.
$\overline{\text{WRITE}}$	135	O	**Write Strobe.** This signal is used in EPP mode as a write strobe. It is active low. (See $\overline{\text{STB}}$ and Table 7-5 for further information.)
X1/OSC	30	I	**Crystal1/Clock.** One side of an external 24 MHz crystal is attached here. The other side is connected to X2. If a crystal is not used, a TTL or CMOS compatible clock is connected to this pin.
X1C	9	I	**Crystal1 Slow.** Input for the internal Real-Time Clock crystal oscillator amplifier.
X2C	10	O	**Crystal2 Slow.** Output for the internal Real-Time Clock crystal oscillator amplifier.
X2	31	O	**Crystal2.** One side of an external 24 MHz crystal is attached here. The other side is connected to X1/OSC. This pin is left unconnected if an external clock is used.
$\overline{\text{ZWS}}$	24	O	**Zero Wait State.** This pin is the Zero Wait State open drain output pin. $\overline{\text{ZWS}}$ is driven low when the EPP, or the ECP, is written, and the access can be shortened.

2.0 Configuration Registers

2.1 OVERVIEW

Fourteen registers constitute the Base Configuration Register set, and control the PC87303 setup. In general, these registers control the enabling of major functions (FDC, UARTs, parallel port, pin functionalty etc.), the I/O addresses of these functions, and whether they power-down via hardware control or not. These registers are the Function Enable Register (FER), the Function Address Register (FAR), the Power and Test Register (PTR), the Function Control Register (FCR), the Printer Control Register (PCR), the Keyboard and Real-Time Clock Control Register (KRR), the Power Management Control Register (PMC), the Tape, UARTs and Parallel Port Register (TUP), the SuperI/O Identification Register (SID), the Advanced SIO Configuration Register (ASC), the Chip Select 0 Configuraton Register 0 (CS0CF0), the Chip Select 0 Configuration Register 1 (CS0CF1), the Chip Select 1 Configuration Register 0 (CS1CF0) and the Chip Select 1 Configuration Register 1 (CS1CF1).

The FER, FAR, and PTR can be accessed via hardware or software. During reset, the PC87303 loads a set of default values, selected by a hardware strapping option, into these three Configuration Registers. FCR, PCR and KRR can only be accessed by software.

An index and data register pair are used to read and write these registers. Each Configuration Register is pointed to by the value loaded into the Index Register. The data to be written into the Configuration Register is transferred via the Data register. A Configuration Register is read in a similar way (i.e., by pointing to it via the Index Register and then reading its contents via the Data Register).

Accessing the Configuration Registers in this way requires only two system I/O addresses. Since that I/O space is shared by other devices the Index and Data Registers can still be inadvertantly accessed. To reduce the chances of an inadvertant access, a simple procedure (see Section 2.2) has been developed.

2.2 SOFTWARE CONFIGURATION

If the system requires access to the Configuration Registers after reset, the following procedure must be used to change data in the registers.

1. Determine the PC87303 Index Register's default location.

   Check the four possible locations (see Table 2-1) by reading them twice. The first byte is the ID byte 88h. The second byte read is always 00h, but read after write always brings the value of the written byte. Compare the data read with the ID byte and then 00h. A match occurs at the correct location. Note that the ID byte is only issued from the Index Register during the first read after a reset. Subsequent reads return the value loaded into the Index Register. Bits 5–6 are reserved and always read 0.
2. Load the Configuration Registers.
   - A. Disable CPU interrupts.
   - B. Write the index of the Configuration Register (00h–0Dh) to the Index Register one time.
   - C. Write the correct data for the Configuration Register in two consecutive write accesses to the Data Register.
   - D. Enable CPU interrupts.
3. Load the Configuration Registers (read-modify-write).
   - A. Disable CPU interrupts.
   - B. Write the index of the Configuration Register (00h–0Dh) to the Index Register one time.
   - C. Read the configuration data in that register via the Data Register.
   - D. Modify the configuration data.
   - E. Write the changed data for the Configuration Register in two consecutive writes to the Data Register. The register updates on the second consecutive write.
   - F. Enable CPU interrupts.

A single read access to the Index and Data Registers can be done at any time without disabling CPU interrupts. When the Index Register is read, the last value loaded into the Index Register is returned. When the Data Register is read, the Configuration Register data pointed to by the Index Register is returned.

2.0 Configuration Registers (Continued)

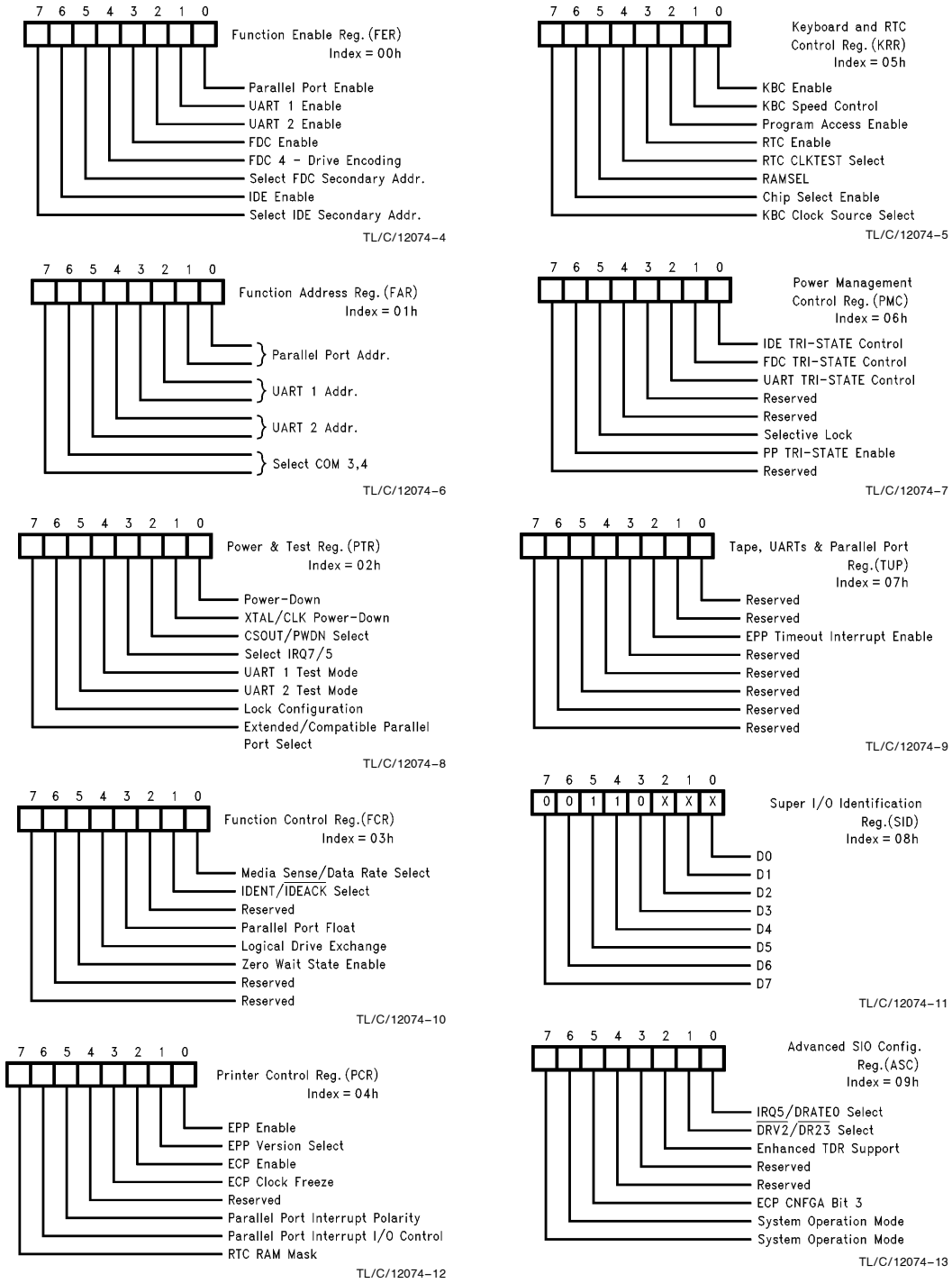

FIGURE 2-1. PC87303 Configuration Registers

2.0 Configuration Registers (Continued)

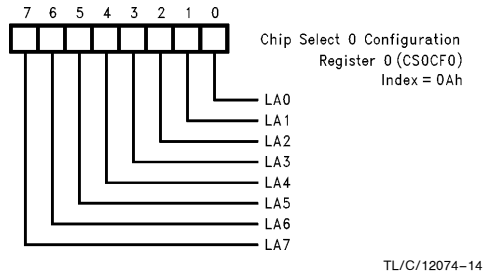

TL/C/12074–14

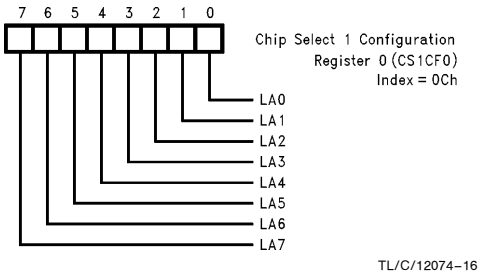

TL/C/12074–16

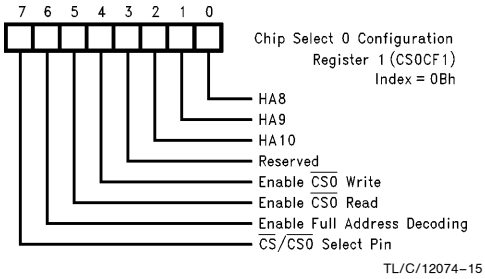

TL/C/12074–15

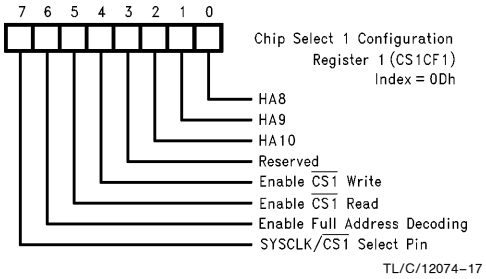

TL/C/12074–17

FIGURE 2-1. PC87303 Configuration Registers (Continued)

2.0 Configuration Registers (Continued)

2.3 HARDWARE CONFIGURATION

During reset, 1 of 32 possible sets of default values are loaded into the first three Configuration Registers. A strapping option on five pins (CFG0–4) selects the set of values that is loaded. This allows for automatic configuration without software intervention. Table 2-1 shows the 32 possible default configurations. The default configuration can be modified by software at any time after reset by using the access procedure described in the Software Configuration Section.

Table 2-1 is organized as follows. The logic values of the five external Configuration Pins are associated with the resulting Configuration Register Data and the activated functions. The activated functions are grouped into seven categories based on the data in the FER. In some cases the data in the FER is given as one of two options. This is because the primary or secondary IDE address is chosen via the FER.

The PTR has one value associated with the active functions in the FER. This value allows the power-down of all clocks when the $\overline{PWDN}$ pin goes active. In the last case where no functions are active after reset, activating the $\overline{PWDN}$ pin also stops the crystal.

Most of the variability available is through the FAR. Addresses controlled by the FAR are coded as follows:

PRI is the PRImary floppy or IDE address (i.e., 3F0–7h or 1F0–7, 3F6, 7h)

SEC is the SECondary IDE address (170–7, 376, 7h)

COM1 is the UART address at 3F8–Fh

COM2 is the UART address at 2F8–Fh

COM3 is the UART address at 3E8–Fh

COM4 is the UART address at 2E8–Fh

LPTA is the parallel port (|| PORT) address at 3BC–3BEh

LPTB is the || PORT address at 378–37Fh

The chosen addresses are given under active functions and are in the same order as the active functions they are associated with. In other words, if the active functions are given as FDC, IDE, UART1, UART2, || PORT and the addresses are given as PRI, PRI, COM1, COM2, LPTB; then the functions and the addresses are associated as follows: FDC = PRI, IDE = PRI, UART1 = COM1, UART2 = COM2, || PORT = LPTB.

2.4 INDEX AND DATA REGISTERS

One more general aspect of the Configuration Registers is that the Index and the Data Register pair can be relocated to any one of two locations. This is controlled through a hardware strapping option on two pins (BADDR0,1) and it allows the registers to avoid conflicts with other adapters in the I/O address space. Table 2-2 shows the address options.

TABLE 2-2. Index and Data Register Optional Locations

BADDR1	BADDR0	Index Addr.	Data Addr.
0	0	398	399
0	1	26E	26F
1	0	15C	15D
1	1	2E	2F

TABLE 2-1. Default Configurations Controlled by Hardware

Configuration Pins (CFGn)					Data (Hex)	Activated Functions
4	3	2	1	0		
					FER = 4F, CF	FDC, IDE, UART1, UART2, || PORT
					PTR = 00	Power-Down Clocks Option
0	0	0	0	0	FAR = 10	PRI, PRI, COM1, COM2, LPTB
0	0	0	0	1	FAR = 11	PRI, PRI, COM1, COM2, LPTA
0	0	0	1	0	FAR = 11	PRI, SEC, COM1, COM2, LPTA
0	0	0	1	1	FAR = 39	PRI, PRI, COM3, COM4, LPTA
0	0	1	0	0	FAR = 24	PRI, PRI, COM2, COM3, LPTB
0	0	1	0	1	FAR = 38	PRI, SEC, COM3, COM4, LPTB
					FER = 4B, CB	FDC, IDE, UART1, || PORT
					PTR = 00	Power-Down Clocks Option
0	0	1	1	0	FAR = 00	PRI, PRI, COM1, LPTB
0	0	1	1	1	FAR = 01	PRI, PRI, COM1, LPTA
0	1	0	0	0	FAR = 01	PRI, SEC, COM1, LPTA
0	1	0	0	1	FAR = 09	PRI, PRI, COM3, LPTA
0	1	0	1	0	FAR = 08	PRI, PRI, COM3, LPTB
0	1	0	1	1	FAR = 08	PRI, SEC, COM3, LPTB

2.0 Configuration Registers (Continued)

TABLE 2-1. Default Configurations Controlled by Hardware (Continued)

Configuration Pins (CFGn)					Data (Hex)	Activated Functions
4	**3**	**2**	**1**	**0**		
					FER = 0F	FDC, UART1, UART2, || PORT
					PTR = 00	Power Clocks Option
0	1	1	0	0	FAR = 10	PRI, COM1, COM2, LPTB
0	1	1	0	1	FAR = 11	PRI, COM1, COM2, LPTA
0	1	1	1	0	FAR = 39	PRI, COM3, COM4, LPTA
0	1	1	1	1	FAR = 24	PRI, COM2, COM3, LPTB
					FER = 49, C9	FDC, IDE, || PORT
					PTR = 00	Power-Down Clocks Option
1	0	0	0	0	FAR = 00	PRI, PRI, LPTB
1	0	0	0	1	FAR = 01	PRI, PRI, LPTA
1	0	0	1	0	FAR = 01	PRI, SEC, LPTA
1	0	0	1	1	FAR = 00	PRI, SEC, LPTB
					FER = 07	UART1, UART2, || PORT
					PTR = 00	Power-Down Clocks Option
1	0	1	0	0	FAR = 10	COM1, COM2, LPTB
1	0	1	0	1	FAR = 11	COM1, COM2, LPTA
1	0	1	1	0	FAR = 39	COM3, COM4, LPTA
1	0	1	1	1	FAR = 24	COM2, COM3, LPTB
					FER = 47, C7	IDE, UART1, UART2, || PORT
					PTR = 00	Power-Down Clocks Option
1	1	0	0	0	FAR = 10	PRI, COM1, COM2, LPTB
1	1	0	0	1	FAR = 11	PRI, COM1, COM2, LPTA
1	1	0	1	0	FAR = 11	SEC, COM1, COM2, LPTA
1	1	0	1	1	FAR = 39	PRI, COM3, COM4, LPTA
1	1	1	0	0	FAR = 24	PRI, COM2, COM3, LPTB
1	1	1	0	1	FAR = 38	SEC, COM3, COM4, LPTB
					FER = 08	FDC
					PTR = 00	Power-Down Clocks Option
1	1	1	1	0	FAR = 10	PRI
					FER = 00	None
					PTR = 02, 02	Power-Down XTAL and Clocks
1	1	1	1	1	FAR = 10	NA

Note: Bit 2 of PTR is sampled during reset according to the value of the SYNC pin.

2.0 Configuration Registers (Continued)

2.5 BASE CONFIGURATION REGISTERS

2.5.1 Function Enable Register (FER, Index 00h)

This register enables and disables major chip functions. Disabled functions have their clocks automatically powered down, but the data in their registers remains intact. It also selects whether the FDC and the IDE controller is located at their primary or secondary address.

Bit 0 When this bit is one the parallel port can be accessed at the address specified in the FAR.

Bit 1 When this bit is one, UART1 can be accessed at the address specified in the FAR. When this bit is zero, access to UART1 is blocked and it is in power-down mode. The UART1 registers retain all data in power down mode.

Caution: Any UART1 interrupt that is enabled and active or becomes active after UART1 is disabled asserts the associated IRQ pin when UART1 is disabled. If disabling UART1 via software, clear the IRQ Enable bit (MCR3) to zero before clearing FER 1. This is not an issue after reset because MCR3 is zero until it is written.

Bit 2 When this bit is one, UART2 can be accessed at the address specified in the FAR. When this bit is zero, access to UART2 is blocked and it is in power-down mode. The UART2 registers retain all data in power down mode.

Caution: Any UART2 interrupt that is enabled and active or becomes active after UART2 is disabled asserts the associated IRQ pin when UART1 is disabled If disabling UART2 via software, clear the IRQ Enable bit (MCR3) to zero before clearing FER1. This is not an issue after reset because MCR3 is zero until it is written.

Bit 3 When this bit is one, the FDC can be accessed at the address specified in the FER bits. When this bit is zero access to the FDC is blocked and it is in power-down mode. The FDC registers retain all data in power down mode.

Bit 4 When this bit is zero the PC87303 can control two floppy disk drives directly without an external decoder. When this bit is one the two drive select signals and two motor enable signals from the FDC are encoded so that four floppy disk drives can be controlled (see Table 2-3 and *Figure 2-2*). Controlling four FDDs requires an external decoder. The pin states shown in Table 2-3 are a direct result of the bit patterns shown. All other bit patterns produce pin states that should not be decoded to enable any drive or motor.

Bit 5 This bit selects the primary or secondary FDC address. (See Table 2-4.)

Bit 6 When this bit is a one the IDE drive interface can be accessed at the address specified by FER bit 7. When it is zero, bit 0 of PMC determines whether the $\overline{HCS0,1}$ pins are inactive, or in TRI-STATE. $\overline{IDEHI}$ and $\overline{IDEHLO}$ are inactive and IDED7 is in TRI-STATE.

Bit 7 This bit selects the primary or secondary IDE address. (See Table 2-4).

TABLE 2-3. Encoded Drive and Motor Pin Information (FER 4 = 1)

Digital Output Register								Drive Control Pins				Decoded Functions
7	6	5	4	3	2	1	0	$\overline{MTR1}$	$\overline{MTR0}$	$\overline{DR1}$	$\overline{DR0}$	
X	X	X	**1**	X	X	0	0	(Note)	0	0	0	Activate Drive 0 and Motor 0
X	X	**1**	X	X	X	0	1	(Note)	0	0	1	Activate Drive 1 and Motor 1
X	**1**	X	X	X	X	1	0	(Note)	0	1	0	Activate Drive 2 and Motor 2
1	X	X	X	X	X	1	1	(Note)	0	1	1	Activate Drive 3 and Motor 3
X	X	X	**0**	X	X	0	0	(Note)	1	0	0	Activate Drive 0 and Deactivate Motor 0
X	X	**0**	X	X	X	0	1	(Note)	1	0	1	Activate Drive 1 and Deactivate Motor 1
X	**0**	X	X	X	X	1	0	(Note)	1	1	0	Activate Drive 2 and Deactivate Motor 2
0	X	X	X	X	X	1	1	(Note)	1	1	1	Activate Drive 3 and Deactivate Motor 3

Note: When FER4 = 1, $\overline{MTR1}$ presents a pulse that is the inverted image of the IOW strobe. This inverted pulse is active whenever an I/O write to address 3F2h or 372h takes place. This pulse is delayed by 25 ns–80 ns after the leading edge of IOW and its leading edge can be used to clock data into an external latch (e.g., 74LS175). Address 3F2h is used if the FDC is located at the primary address (FER5 = 0) and address 372h is used if the FDC is located at the secondary address (FER5 = 1).

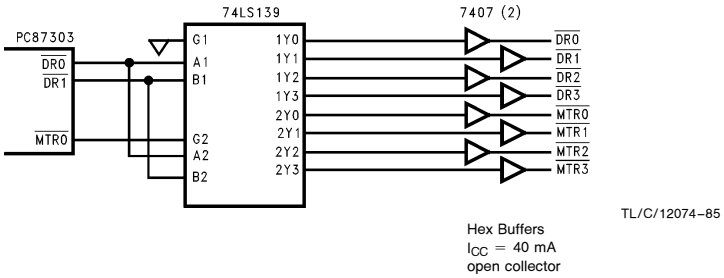

FIGURE 2-2. PC87303 Four Floppy Drive Circuit

2.0 Configuration Registers (Continued)

TABLE 2-4. Primary and Secondary Drive Address Selection

Bit 5	Bit 7	Drive	PC-AT Mode
0	X	FDC	Primary, 3F0–7h
1	X	FDC	Secondary, 3F0–7h
X	0	IDE	Primary, 1F0–7, 3F6, 3F7h
X	1	IDE	Secondary 170–7, 376, 7h

2.5.2 Function Address Register (FAR, Index = 01h)

This register selects the ISA I/O address range to which each peripheral function responds.

Bits 0,1 These bits select the parallel port address as shown in Table 2-5:

TABLE 2-5. Parallel Port Addresses

ASC Bit 0	FAR Bit 1	FAR Bit 0	Parallel Port Address	PC-AT Interrupt
0	0	0	LPTB (378–37F)	IRQ5 (Note)
X	0	1	LPTA (3BC–3BE)	IRQ7
0	1	0	LPTC (278–27F)	IRQ5
X	1	1	Reserved	TRI-STATE (CTR4 = 0)
1	0	0	LPTB (378–37F)	IRQ7
1	1	0	LPTC (278–27F)	IRQ7

Note: The interrupt assigned to this address can be changed to IRQ7 by setting Bit 3 of the power and test register.

Bits 2–5 These bits determine which ISA I/O address range is associated with each UART (see Tables 2-6, 2-7).

TABLE 2-6. COM Port Selection for UART1

FAR		UART1
Bit 3	Bit 2	COM#
0	0	1 (3F8-F)
0	1	2 (2F8-F)
1	0	3 (Table 2-8)*
1	1	4 (Table 2-8)*

*Note: COM3 and COM4 addresses are determined by Bits 6 and 7.

TABLE 2-7. COM Port Selection for UART2

FAR		UART2
Bit 5	Bit 4	COM#
0	0	1 (3F8-F)
0	1	2 (2F8-F)
1	0	3 (Table 2-8)*
1	1	4 (Table 2-8)*

*Note: COM3 and COM4 addresses are determined by Bits 6 and 7.

Bits 6, 7 These bits select the addresses that are used for COM3 and COM4 (see Table 2-8).

TABLE 2-8. Address Selection for COM3 and COM4

Bit 7	Bit 6	COM3 IRQ4	COM4 IRQ3
0	0	3E8–Fh	2E8–Fh
0	1	338–Fh	238–Fh
1	0	2E8–Fh	2E0–7h
1	1	220–7h	228–Fh

2.5.3 Power and Test Register (PTR, Index = 02h)

This register determines several power-down features: the power-down method used when the power-down pin ($\overline{PWDN}$) is asserted (crystal and clocks vs clocks only), whether hardware power-down is enabled, and provides a bit for software power-down of all enabled functions. It selects whether IRQ7 or IRQ5 is associated with LPTB. It puts the enabled UARTs into their test mode.

Independent of this register the floppy disk controller can enter low power mode via the Mode Command or the Data Rate Select Register.

Bit 0 Setting this bit causes all enabled functions to be powered down. If the crystal power-down option is selected (see Bit 1) the crystal is also powered down. All register data is retained when the crystal or clocks are stopped.

Bit 1 When the power-down pin or Bit 0 is asserted this bit determines whether the enabled functions have their internal clocks stopped (Bit 1 = 0) or the external crystal (Bit 1 = 1) is stopped. Stopping the crystal is the lowest power consumption state of the part. However, if the crystal is stopped, a finite amount of time (~8 ms) is required for crystal stabilization once the power-down pin ($\overline{PWDN}$) or Bit 0 is deasserted. If all internal clocks are stopped, but the crystal continues to oscillate, no stabilization period is required after the power-down pin or Bit 0 is deasserted.

Bit 2 Setting this bit enables the chip select function of the $\overline{PWDN}/\overline{CSOUT}$ pin. Resetting this bit enables the power-down function of this pin. Sync pin is sampled during reset to this bit.

Bit 3 Setting this bit associates the parallel port with IRQ7 when the address for the parallel port is 378–37Fh (LPTB). This bit is a ''don't care'' when the parallel port address is 3BC–3BEh (LPTA) or 278–27Fh (LPTC).

Bit 4 Setting this bit puts UART1 into a test mode, which causes its Baud Out clock to be present on its SOUT1 pin if the Line Control Register bit 7 is set to 1.

Bit 5 Setting this bit puts UART2 into a test mode, which causes its Baud Out clock to be present on its SOUT2 pin if the Line Control Register bit 7 is set to 1.

Bit 6 Setting this bit to a 1 prevents all further write accesses to the Configuration Registers. Once it is set by software it can only be cleared by a hardware reset. After the initial hardware reset it is 0.

Bit 7 When not in EPP or ECP modes, this bit controls Compatible/Extended mode, thus controlling Pulse/Level interrupt.

Set this bit to 0 for Compatible mode, Pulse Interrupt. Set this bit to 1 for Extended mode, Level Interrupt.

Note: Parallel port interrupt (Pulse/Level) in EPP and ECP modes is always pulse.

In EPP mode this bit selects Regular/Automatic bi-directional mode, thus selecting the direction control method:

Set this bit to 0 for Automatic mode, Host $\overline{RD}$ and $\overline{WR}$ signals control the direction.

Set this bit to 1 for Regular mode, bit 5 of CTR controls the direction.

After hardware reset, this bit is 0.

2.5.4 Function Control Register (FCR, Index = 03h)

This register determines several pin options:
It selects between Data Rate output and automatic media sense inputs, and between IDENT or $\overline{IDEACK}$ inputs for DMA control of IDE.

For Enhanced Parallel Port it enables the $\overline{ZWS}$ option.

On reset the FCR 2–7 bits are cleared to 0.

Bit 0 Media Sense/Data Rate select bit. When this bit is 0, the MSEN0–1 pins are Media Sense inputs. When this bit is 1, the DRATE0-1 pins are Data Rate outputs. $\overline{VLD0}$ pin is sampled during reset to this bit. When ths bit is 0, bits 5–7 of TDR are valid. When this bit is 1, bits 2–7 of TDR are TRI-STATE during read. When bit 2 of ASC Register is 1, TDR is not controlled by this bit.

Bit 1 IDENT/$\overline{IDEACK}$ select bit. When this bit is 0, the IDENT pin is used, and the IDE DMA is disabled. When this bit is 1, the IDE DMA is enabled, and the IDENT input is assumed to be 1.

Bit 2 Reserved.

Bit 3 Parallel Port Floating Control bit.
When this bit is 0, there is no software unconditional float control. This bit does not affect the parallel port pins.
When this bit is 1, the parallel port outputs are in TRI-STATE, and their pull-ups are disconnected.

Bit 4 Logical Drive Exchange bit. This bit allows software to exchange the physical floppy-disk control signals, assigned to drives 0 and 1, thus exchanging the logical drives A and B.

This is accomplished by exchanging control of the $\overline{DR0}$ and $\overline{MTR0}$ pins with the $\overline{DR1}$ and $\overline{MTR1}$ pins. The result is undefined if this bit is set while bit 4 of FER is 1. Table 2-9 shows the associations between the Configuration Register bit, the Digital Output Register bits (DRVSEL0,1 and MTR0,1) and the drive and motor control pins ($\overline{DR0,1}$ and $\overline{MTR0,1}$). When bit 2 of ASC Register is 1, the logical drive exchange function is controlled by bits 2 and 3 of TDR.

TABLE 2-9. Logical Drive Exchange

FCR	Digital Output Register (FDC)				Asserted FDC Pins
Bit 4	MTR1	MTR0	DRVSEL1	DRVSEL0	
0	0	1	0	0	$\overline{DR0}$, $\overline{MTR0}$
0	1	0	0	1	$\overline{DR1}$, $\overline{MTR1}$
1	0	1	0	0	$\overline{DR1}$, $\overline{MTR1}$
1	1	0	0	1	$\overline{DR0}$, $\overline{MTR0}$

Bit 5 Zero Wait State enable bit. If this bit is 1, $\overline{ZWS}$ is driven low when the Enhanced Parallel Port (EPP), or the ECP, can accept a short host read/write-cycle, otherwise the $\overline{ZWS}$ open drain output is not driven. EPP $\overline{ZWS}$ operation should be configured when the system's device is fast enough to support it.

Bits 6, 7 Reserved. Use Read Modified Write to change the FCR register.

2.5.5 Printer Control Register (PCR, Index = 04h)

This register enables the EPP and ECP version modes, and interrupt options. It also enables the RTC RAM write mask bit. On reset the PCR bits are cleared to 0.

The parallel port mode is software configurable as follows:

TABLE 2-10. Parallel Port Mode

Operation Mode	FER Bit 0	PTR Bit 7	PCR Bit 0	PCR Bit 2
None	0	X	X	X
Compatible	1	0	0	0
Extended	1	1	0	0
EPP	1	X	1	0
ECP	1	X	0	1

Bit 0 EPP enable bit. When this bit is 0, the EPP is disabled, and the EPP registers are not accessible (access ignored).

When this bit is 1, and bit 2 of PCR is 0, the EPP is enabled. Note that the EPP should not be configured with base address 3BCh.

For further information refer to bit 5 of FCR.

2.0 Configuration Registers (Continued)

Bit 1 EPP version select bit. When this bit is 0, Version 1.7 is supported, and $\overline{STB}$, $\overline{AFD}$, $\overline{INIT}$, and $\overline{SLIN}$ are open drain outputs.

When this bit is 1, Version 1.9 is supported (IEEE 1284), and $\overline{STB}$, $\overline{AFD}$, $\overline{INIT}$, and $\overline{SLIN}$ are push-pull outputs. This bit has the same affect on the output buffers in ECP modes 0 and 2.

Bit 2 ECP enable bit. When this bit is 0 the ECP is disabled and in power-down mode. The ECP registers are not accessible (access ignored) and the ECP interrupt and DMA are inactive. When this bit is 1 the ECP is enabled. The software should change this bit to 1 only when bits 0, 1, and 2 of the existing CTR are 1, 0 and 0 respectively.

Bit 3 ECP clock freeze control bit. In power-down modes 2 and 3: When this bit is 0, the clock provided to the ECP is stopped; and

When this bit is 1, the clock provided to the ECP is not stopped.

Bit 4 Reserved. This bit must be set to 0.

Bit 5 Parallel port interrupt (IRQ5 or IRQ7) polarity control bit. When this bit is 0 the interrupt polarity is level high or negative pulse. When this bit is 1 the interrupt polarity is inverted.

Bit 6 Parallel port interrupt (IRQ5 or IRQ7) open drain control bit. When this bit is 0 the configured interrupt line (IRQ5 or IRQ7) has a totem-pole output. When this bit is 1 the configured interrupt line has an open drain output (drive low, no drive high, no internal pullup).

Bit 7 RTC RAM write mask bit. When this bit is 0, the RTC RAM is writeable. When this bit is 1, the RTC RAM is not writeable, and writes are ignored.

2.5.6 KBC and RTC Control Register (KRR, Index = 05h)

This register enables and disables the keyboard controller (KBC) and the Real-Time Clock (RTC). It selects the clock source and operating mode of the KBC, selects different banks of CMOS RAM in the RTC, and selects the RTC test mode. When PWRGOOD is low, KRR is initialized to 00000001.

Bit 0 KBC Enable bit. When this bit is zero the KBC clock is frozen and the state of its dedicated pins cannot be altered. When this bit is one the KBC is functional.

Bit 1 KBC Speed control bit. Controls the KBC speed when X1/OSC clock source is selected (KRR7 is 0). This bit is ignored when SYSCLK clock source is selected (KRR7 is 1).

When this bit is 0 the KBC clock is the X1/OSC frequency divided by three (typically 8 MHz). When this bit is 1 the KBC clock is the X1/OSC frequency divided by two (typically 12 MHz).

Bit 2 $\overline{PAE}$. Program Access Enable of the keyboard controller. This bit should be set to 1.

Bit 3 RTC Enable bit. When this bit is 0 the RTC is disabled and $\overline{IRQ8}$ is in TRI-STATE. When this bit is 1 the RTC is enabled.

Bit 4 CLKTEST. RTC clock test mode select. When this bit is 1 the SYNC pin outputs the 32 kHz RTC clock. When this bit is 0 the SYNC pin is not driven. When PWRGOOD is low, this bit is initialized to 0.

Bit 5 RAMSREL. RTC CMOS RAM bank select. When this bit is 1 it selects the upper 128 bytes of CMOS RAM. When this bit is 0 it selects the lower 128 bytes of CMOS RAM.

Bit 6 On-chip KBC Address Decoder Enable bit. When this bit is 0 (and KRR0 is 1) the KBC is accessed when $\overline{CS}$ is low, and the address pin A2 selects the KBC registers. When this bit is 1 (and KRR0 is 1) the $\overline{CS}$ input is ignored, and the address pins A0–9 select the KBC registers (60h or 64h).

Bit 7 KBC clock source select bit. When this bit is 0 the KBC uses the X1/OSC clock source. When this bit is 1 the KBC uses the SYSCLK clock source. This bit enables the KBC to operate in power-down mode, even when the X1 clock is frozen. It may be modified only when the KBC is disabled via bit 0 of KRR.

2.5.7 Power Management Control Register (PMC, Index = 06h)

This register controls the TRI-STATE and input pins. The PMC register is accessed through Index 06h. The PMC Register is cleared to 0 on reset.

Bit 0 IDE TRI-STATE Control bit

0: When this bit is 0, it does not affect the IDE pins.

1: IDE7 and $\overline{HCS0,1}$ are in TRI-STATE, $\overline{IDEHI}$ and $\overline{IDELO}$ are inactive when either the IDE is disabled or the chip is in power-down mode.

Bit 1 FDC TRI-STATE Control bit.

0: When this bit is 0, it does not affect the FDC pins.

1: The FDC outputs, except IRQ6, are in TRI-STATE when either the FDC is disabled or the chip is in power down mode.

Bit 2 UART TRI-STATE Control bit.

0: When this bit is 0, it does not affect the UART's pins.

1: The outputs of any UART, except IRQ4 and IRQ3, are in TRI-STATE when that UART is disabled or the chip is in power-down.

2.0 Configuration Registers (Continued)

Bits 3, 4 Reserved.

Bit 5 Selective Lock bit. Unlike bit 6 of PTR, which locks all configuration bits, this bit only enables locking of the following:

Bit 5 of PMC, bit 4 of FER, bits 0–7 of FAR, bits 2, 3 of PTR, bit 1 of FCR, and bit 5 of KRR. Once this bit has been set by software, it can only be cleared by a hardware reset. It should be used instead of bit 6 of PTR if a configration bit should be dynamically modified by software (e.g., PMC bits).

0: No lock, except via bit 6 of PTR.

1: Any write to the above configuration bits is ignored (until a hardware reset, which clears this bit).

Bit 6 Parallel Port TRI-STATE Control bit.

0: When this bit is 0, it does not affect the parallel port pins.

1: The parallel port outputs, except the configured IRQ line (IRQ5 or IRQ7), are in TRI-STATE when either the parallel port is disabled or the chip is in power-down mode.

Bit 7 Reserved.

2.5.8 Tape, UARTs and Parallel Port Configuration Register (TUP, Index = 07h)

The TUP Register is cleared to XXXXX0XX on reset.

Bit 1 Reserved.

Bit 2 EPP Timeout Interrupt Enable bit.

When this bit is 0, the EPP timeout interrupt is masked.

When this bit is 1, the EPP timeout interrupt is generated on the selected IRQ line (IRQ5 or IRQ7), according to bits [4:6] of PCR.

Bits 3–7 Reserved.

2.5.9 SuperI/O Identification Register (SID, Index = 08h)

The SID Register is accessed, like the other configuration registers, through the Index Register. This read-only register is used to identify the PC87303 chip.

7	6	5	4	3	2	1	0
0	0	1	1	0	X	X	X

Super I/O Identification Register(SID) Index = 08h

TL/C/12074–86

2.5.10 Advanced SuperI/O Configuration Register (ASC, Index 09h)

During reset bits 0–2 and bit 5 are initialzed to 0, and bits 6–7 are initialized to 1.

Bit 0 IRQ5/DRATE0 select.

0: Pin 16 is IRQ5.

1: Pin 16 is ADRATE0 open drain output.

Selection of parallel port interrupt pin (IRQ5 or IRQ7) via bits 1 and 0 of FAR, and via bit 3 of PTR, is ignored and IRQ7 is used as parallel port interrupt. Unlike IRQ5, ADRATE0 is not controlled by bits 6 and 5 of PCR, it has the same value as DRATE0.

Bit 1 $\overline{\text{DRVE}}/\overline{\text{DR23}}$ select.

0: Pin 78 is $\overline{\text{DRV2}}$.

1: Pin 78 is $\overline{\text{DR23}}$.

$\overline{\text{DR23}}$ is asserted when either drive 2 or drive 3 is accessed (except during logical drive exchange—see bit 3 of TDR).

The value of $\overline{\text{DR23}}$ is undefined when working with four drives encoding (bit 4 of FER is 1). The PC87303 assumes $\overline{\text{DRV2}}$ is 1 when bit 1 of ASC is 1.

Bit 2 Enhanced TDR support.

0: TDR read is a function of bit 0 of FCR configuration register.
Pin 90 is $\overline{\text{IOCS16}}$.
Pin 87 is $\overline{\text{IDEHI}}/\overline{\text{VLD0}}$.

1: Pin 90 is DRID0 input.
The PC87303 assumes $\overline{\text{IOCS16}}$ is active when bit 2 of ASC is 1.
Pin 87 is DRID1/$\overline{\text{VLD0}}$ input.

Bit 2 of ASC should be set to one before the FDD is accessed, thus preventing contention between $\overline{\text{IDEHI}}$ and DRID1.

The PC87303 provides full TDR support.

Bit 3 Reserved bit. On ASC writes, this bit must be written with a 0. On ASC reads, the value is undefined.

Bit 4 Reserved.

Bit 5 The value of this pin is reflected on bit 3 of CNFGA ECP register.

Bits 6, 7 System Operation Mode. The PC87303 can be configured to either PC-AT, PS/2 or Model 30 modes.

00: Model 30 mode

01: PS/2 mode

10: Reserved and illegal

11: PC-AT mode

2.5.11 Chip Select 0 Configuration Register 0 (CS0CF0, Index = 0Ah)

This register holds the low address bits of the monitored I/O address. See CS0CF1 register for complementary description. Bit 0 holds A0.

2.5.12 Chip Select 0 Configuration Register 1 (CS0CF1, Index = 0Bh)

This register controls the behavior of the $\overline{\text{CS0}}$ pin. $\overline{\text{CS0}}$ is asserted on non-DMA PIO cycles, when $\overline{\text{RD}}$ or $\overline{\text{WR}}$ is asserted. $\overline{\text{CS0}}$ can be asserted three ways: 1) only on reads 2) only on writes or 3) on all PIO cycles. The register is initialized to 0 during reset.

Bits 0–2 High address bits of the monitored I/O address. Bit 2 holds A10, bit 1 holds A9 and bit 0 holds A8.

Bit 3 Reserved.

Bit 4 Enable $\overline{\text{CS0}}$ assertion on write cycles.

Bit 5 Enable $\overline{\text{CS0}}$ assertion on read cycles.

Bit 6 Enable full address-decoding.

0: Decode only address bits A9–A0. Ignore address bit A10.

1: Decode address bits A10–A0

Bit 7 $\overline{CS0}$ Select Bit.

0: Pin 2 is $\overline{CS}$ input.

1: Pin 2 is $\overline{CS0}$ output. The PC87303 assumes that $\overline{CS}$ input is 1, thus bit 6 of KRR must be 1 to access the KBC.

2.5.13 Chip Select 1 Configuration Register 0 (CS1CF0, Index = 0Ch)

This register holds the low address bits of the monitored I/O address. See CS1CF1 register for complementary description. Bit 0 holds A0.

2.5.14 Chip Select 1 Configuration Register 1 (CS1CF1, Index = 0Dh)

This register controls the behaviour of the $\overline{CS1}$ pin. $\overline{CS1}$ is asserted on non-DMA PIO cycles, when $\overline{RD}$ or $\overline{WR}$ is asserted. $\overline{CS1}$ can be asserted in three ways: 1) only on reads 2) only on writes or 3) on all PIO cycles. The register is initialized to 0 during reset.

Bits 0–2 High address bits of the monitored I/O address. Bit 2 holds A10, bit 1 holds A9 and bit 0 holds A8.

Bit 3 Reserved.

Bit 4 Enable $\overline{CS1}$ assertion on write cycles.

Bit 5 Enable $\overline{CS1}$ assertion on read cycles.

Bit 6 Enable full address-decoding.

0: Decode only address bits A9–A0. Ignore address bit A10.

1: Decode address bits A10–A0

Bit 7 $\overline{CS1}$ Select Bit.

0: Pin 23 is SYSCLK.

1: Pin 23 is $\overline{CS1}$ output. The PC87303 assumes that SYSCLK input is 1, thus bit 7 of KRR must be 0 to operate the KBC.

2.6 POWER-DOWN OPTIONS

There are various methods for entering the power-down mode. All methods result in one of three possible modes. This section associates the methods of entering power-down with the resulting mode.

Mode 1: The internal clock stops for a specific function (i.e., UART1 and/or UART2 and/or FDC).

This mode is entered by any of the following actions:

1. Clear the FER bit for the specific function that is powered down. See Section 2.5.1 FER bits 1–3.
2. During reset, set certain CFG 0–4 pins. See Table 2-1.
3. Execute the FDC Mode Command with PTR bit 1 = 0 (XTAL/CLK). See Section 4.2.6 LOW PWR.
4. Set Data Rate Select Register bit 6, in the FDC, high, with PTR bit 1 = 0. See Section 3.6 bit 6.

Mode 2: The internal clocks are stopped for all enabled functions.

Note: Clocks to disabled functions are always inactive.

This mode is entered by any of the following actions:

1. Clear all FER bits for any enabled function. See Section 2.5.1 FER bits 1–3.
2. Clear PTR bits 1 (XTAL/CLK) and 2 (CSOUT/PWDN select). Then assert the $\overline{PWDN}$ signal low. See Section 2.5.3 PTR bits 1,2 and Section 1.0 $\overline{PWDN}$ pin.
3. Clear PTR bit 1 and then set PTR bit 0 (power-down) high. See Section 2.5.3 PTR bits 0 and 1.

Mode 3: The external crystal is stopped and internal clocks are stopped for all enabled functions.

This mode is entered by any of the following actions:

1. Clear all FER bits that enable the FDC, UART1, and UART2 functions. See Section 2.5.1 FER bits 1–3.
2. Set PTR bit 1 (XTAL/CLK), clear PTR bit 2 (CSOUT/PWDN select). Then assert the $\overline{PWDN}$ signal low. See Section 2.5.3 PTR bits 1,2 and Section 1.0 $\overline{PWDN}$ pin.
3. Set PTR bit 1 and then set PTR bit 0 high. See Section 2.5.3 PTR bits 0 and 1.
4. During reset, pull CFG0–4 pins high.
5. Execute the FDC Mode Command with PTR bit 1 = 1. See Section 4.2.6 LOW PWR.
6. Set Data Rate Select Register bit 6, in the FDC, high with PTR bit 1 = 1. See Section 3.6 bit 6.

2.7 POWER-UP PROCEDURE AND CONSIDERATIONS

2.7.1 Crystal Stabilization

If the crystal is stopped by putting either the FDC or the UARTs into low power mode, then a finite amount of time (~8 ms) must be allowed for crystal stabilization during subsequent power-up. The stabilization period can be sensed by reading the Main Status Register in the FDC, if the FDC is being powered up. (The Request for Master bit is not set for ~8 ms.) If either one of the UARTs are being powered up, but the FDC is not, then the software must determine the ~8 ms crystal stabilization period. Stabilization of the crystal can also be sensed by putting the UART into local loopback mode and sending bytes until they are received correctly.

2.7.2 UART Power-Up

The clock signal to the UARTs is controlled through the Configuration Registers (FER, PTR). In order to restore the clock signal to one or both UARTs the following conditions must exist:

1. The appropriate enable bit (FER 1,2) for the UART(s) must be set
2. and the power-down bit (PTR 0) must not be set
3. and if the PWDN pin option (PTR 2) is used the $\overline{CSOUT}$/$\overline{PDWN}$ pin must be inactive.

If the crystal has been stopped follow the guidelines in Section 2.7.1 before sending data or signalling that the receiver channel is ready.

2.7.3 FDC Power-Up

The clock signal to the FDC is controlled through the Configuration Registers, the FDC Mode Command and the Data Rate Select Register. In order to restore the clock signal to the FDC the following conditions must exist:

1. The appropriate enable bit (FER 3) must be set
2. and the power-down bit (PTR 0) must not be set
3. and if the PWDN pin option (PTR 2) is used the $\overline{CSOUT}$/$\overline{PDWN}$ pin must be inactive.

In addition to these conditions, one of the following must be done to initiate the recovery from power-down mode:

1. Read the Main Status Register until the RQM bit (MSR7) is set or

2.0 Configuration Registers (Continued)

2. Write to the Data Rate Select Register and set the Software Reset bit (DSR7) or
3. Write to the Digital Output Register, set and then clear the Reset bit (DOR2) or
4. Read the Data Register and the Main Status Register until the RQM bit is set.

If the crystal has been stopped, read the RQM bit in the Main Status Register until it is set. The RQM bit is not set until the crystal has stabilized.

3.0 FDC Register Description

The floppy disk controller is suitable for all PC-AT, EISA, PS/2, and general purpose applications. The operational mode (PC-AT, PS/2, and Model 30) of the FDC is determined by bits 7, 6 of ASC register. AT mode is the default. DP8473 and N82077 software compatibility is provided. Key features include a 16-byte FIFO, PS/2 diagnostic register support, perpendicular recording mode, CMOS disk interface, and a high performance analog data separator. See *Figure 3-1*.

The FDC supports the standard PC data rate drives of 250/500 kbps, 300/500 kbps, and 1 Mbps in MFM-encoded data mode, but is no longer guaranteed through functional testing to support the older FM encoded data mode. References to the older FM mode remain in this document to clarify the true functional operation of the device.

The 1 Mbps data rate is used by the high performance tape and floppy drives. The FDC supports these floppy drives which utilize high density media, and require the perpendicular recording mode format. When used with the 1 Mbps data rate, this new format allows the use of 4 MB floppy drives which format Extra Density (ED) media to 2.88 MB capacity.

The high performance internal analog data separator needs no external components. It improves on the window margin performance standards of the DP8473, and is compatible with the strict data separator requirements of floppy disk and floppy-tape drives.

The FDC contains write precompensation circuitry that defaults to 125 ns for 250 kbps, 300 kbps, and 500 kbps and to 41.67 ns for 1 Mbps. These values can be overridden in software to disable write precompensatoin or to provide levels of precompensation up to 250 ns.

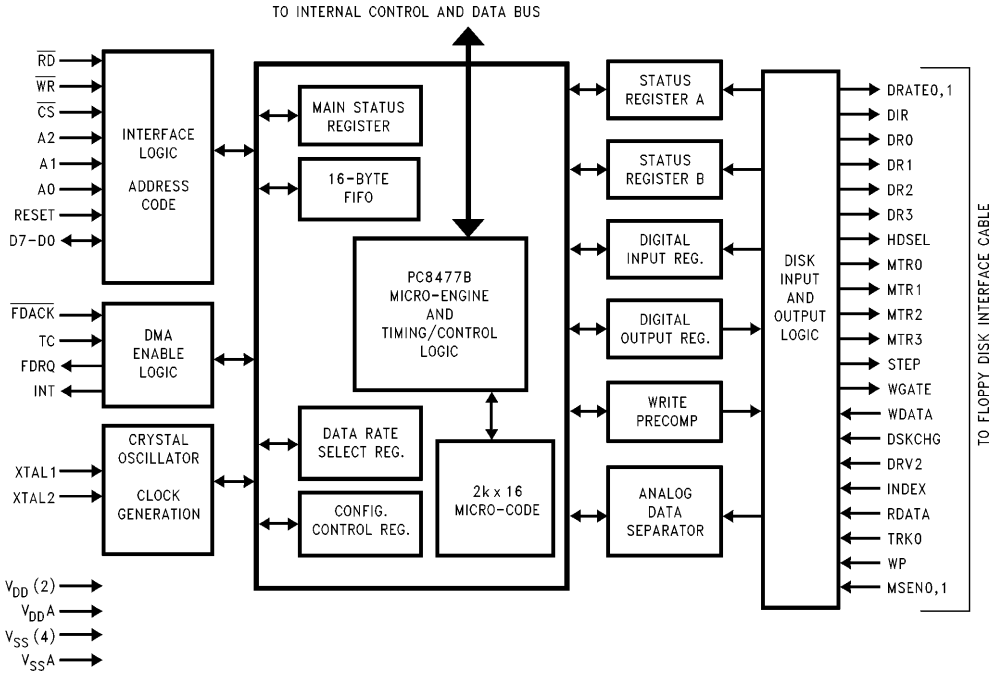

TL/C/12074–18

FIGURE 3-1. FDC Functional Block Diagram

3.0 FDC Register Description (Continued)

The FDC has internal 24 mA data bus buffers which allow direct connection to the system bus. The internal 40 mA totem-pole disk interface buffers are compatible with both CMOS drive inputs and 150Ω resistor terminated disk drive inputs.

3.1 FDC CONTROL REGISTERS

The following FDC registers are mapped into the addresses shown in Table 3-1 and described in the following sections. The base address range is provided by the on-chip address decoder pin. For PC-AT or PS/2 applications, the diskette controller primary address range is 3F0 to 3F7h, and the secondary address range is 370 to 377h. The FDC supports three different register modes: the PC-AT mode, PS/2 mode (Micro Channel systems), and the Model 30 mode (Model 30). See Section 5.2 for more details on how each register mode is enabled. When applicable, the register definition for each mode of operation is given. If no special notes are made, then the register is valid for all three register modes.

TABLE 3-1. Register Description and Addresses

A2	A1	A0	IDENT	R/W	Register	
0	0	0	0	R	Status Register A*	SRA
0	0	1	0	R	Status Register B*	SRB
0	1	0	X	R/W	Digital Output Register	DOR
0	1	1	X	R/W	Tape Drive Register	TDR
1	0	0	X	R	Main Status Register	MSR
1	0	0	X	W	Data Rate Select Register	DSR
1	0	1	X	R/W	Data Register (FIFO)	FIFO
1	1	0	X	X	None (Bus TRI-STATE)	
1	1	1	X	R	Digital Input Register	DIR
1	1	1	X	W	Configuration Control Register	CCR

***Note:** SRA and SRB are enabled by IDENT = 0 during a chip reset only.

3.1.1 Status Register A (SRA) — Read Only

This is a read-only diagnostic register that is part of the PS/2 floppy controller register set, and is enabled when in the PS/2 or Model 30 mode. This register monitors the state of the IRQ6 pin and some of the disk interface signals. The SRA can be read at any time when in PS/2 mode. In the PC-AT mode, D7–D0 are TRI-STATE during a μP read.

SRA—PS/2 Mode

	D7	D6	D5	D4	D3	D2	D1	D0
DESC	IRQ6 PEND	$\overline{DRV2}$	STEP	$\overline{TRK0}$	HDSEL	$\overline{INDX}$	$\overline{WP}$	DIR
RESET COND	0	N/A	0	N/A	0	N/A	N/A	0

D7 **Interrupt Pending:** This active high bit reflects the state of the IRQ6 pin.

D6 **$\overline{\text{2nd Drive Installed}}$:** Active low status of the DRV2 disk interface input, indicating if a second drive has been installed.

D5 **Step:** Active high status of the STEP disk interface output.

D4 **$\overline{\text{Track 0}}$:** Active low status of the TRK0 disk interface input.

D3 **Head Select:** Active high status of the HDSEL disk interface output.

D2 **$\overline{\text{Index}}$:** Active low status of the INDEX disk interface input.

D1 **$\overline{\text{Write Protect}}$:** Active low status of the WP disk interface input.

D0 **Direction:** Active high status of the DIR disk interface output.

SRA—Model 30 Mode

	D7	D6	D5	D4	D3	D2	D1	D0
DESC	IRQ6 PEND	FDRQ	STEP	TRK0	$\overline{HDSEL}$	INDX	WP	$\overline{DIR}$
RESET COND	0	0	0	N/A	1	N/A	N/A	1

D7 **Interrupt Pending:** This active high bit reflects that state of the IRQ6 pin.

D6 **DMA Request:** Active high status of the FDRQ signal.

D5 **Step:** Active high status of the latched STEP disk interface output. This bit is latched with the STEP output goes active, and is cleared with a read from the DIR, or with a hardware or software reset.

D4 **Track 0:** Active high status of TRK0 disk interface input.

D3 **$\overline{\text{Head Select}}$:** Active low status of the HDSEL disk interface output.

D2 **Index:** Active high status of the INDEX disk interface input.

D1 **Write Protect:** Active high status of the WP disk interface input.

D0 **$\overline{\text{Direction}}$:** Active low status of the DIR disk interface output.

3.1.2 Status Register B (SRB) — Read Only

This read-only diagnostic register is part of the PS/2 floppy controller register set, and is enabled when in the PS/2 or Model 30 mode. The SRB can be read at any time when in PS/2 mode. In the PC-AT mode, D7–D0 are TRI-STATE during a μP read.

SRB—PS/2 Mode

	D7	D6	D5	D4	D3	D2	D1	D0
DESC	1	1	DR0	WDATA	RDATA	WGATE	MTR1	MTR0
RESET COND	N/A	N/A	0	0	0	0	0	0

D7 **Reserved:** Always 1.

D6 **Reserved:** Always 1.

D5 **Drive Select 0:** Reflects the status of the Drive Select 0 bit in the DOR (address 2, bit 0). It is cleared after a hardware reset, not a software reset.

D4 **Write Data:** Every inactive edge transition of the WDATA disk interface output causes this bit to change states.

D3 **Read Data:** Every inactive edge transition of the RDATA disk interface output causes this bit to change states.

D2 **Write Gate:** Active high status of the WGATE disk interface output.

D1 **Motor Enable 1:** Active high status of the MTR1 disk interface output. Low after a hardware reset, unaffected by a software reset.

3.0 FDC Register Description (Continued)

D0 **Motor Enable 0:** Active high status of the MTR0 disk interface output. Low after a hardware reset, unaffected by a software reset.

SRB—Model 30 Mode

	D7	D6	D5	D4	D3	D2	D1	D0
DESC	$\overline{DRV2}$	$\overline{DR1}$	$\overline{DR0}$	WDATA	RDATA	WGATE	$\overline{DR3}$	$\overline{DR2}$
RESET COND	N/A	1	1	0	0	0	1	1

D7 **$\overline{\text{2nd Drive Installed}}$**: Active low status of the DRV2 disk interface input.

D6 **$\overline{\text{Drive Select 1}}$:** Active low status of the DR1 disk interface output.

D5 **$\overline{\text{Drive Select 0}}$:** Active low status of the DR0 disk interface output.

D4 **Write Data:** Active high status of latched WDATA signal. This bit is latched by the inactive going edge of WDATA and is cleared by a read from the DIR. This bit is not gated by WGATE.

D3 **Read Data:** Active high status of latched RDATA signal. It is latched by the active going edge of RDATA and is cleared by a read from the DIR.

D2 **Write Gate:** Active high status of latched WGATE signal. This bit is latched by the active going edge of WGATE and is cleared by a read from the DIR.

D1 **$\overline{\text{Drive Select 3}}$:** Active low status of the DR3 disk interface output.

Note: The MTR3, MTR2, DRV3, DRV2 pins are only available in four-drive mode (bit 4 of FER is 1) and require external logic.

D0 **$\overline{\text{Drive Select 2}}$:** Active low status of the DR2 disk interface output.

Note: The MTR3, MTR2, DRV3, DRV2 pins are only available in four-drive mode (bit 4 of FER is 1) and require external logic.

3.1.3 Digital Output Register (DOR) Read/Write

The DOR controls the drive select and motor enable disk interface outputs, enables the DMA logic, and contains a software reset bit. The contents of the DOR is set to 00 (hex) after a hardware reset, and is unaffected by a software reset. The DOR can be written to at any time.

DOR

	D7	D6	D5	D4	D3	D2	D1	D0
DESC	MTR3	MTR2	MTR1	MTR0	DMAEN	RESET	DRIVE SEL 1	DRIVE SEL 0
RESET COND	0	0	0	0	0	0	0	0

D7 **Motor Enable 3:** This bit controls the MTR3 disk interface output. A 1 in this bit causes the MTR3 pin to go active.

D6 **Motor Enable 2:** Same function as D7 except for MTR2.

D5 **Motor Enable 1:** Same function as D7 except for MTR1. (See bit 4 of FCR for further information.)

D4 **Motor Enable 0:** Same function as D7 except for MTR0. (See bit 4 of FCR for further information.)

D3 **DMA Enable:** This bit has two modes of operation.

PC-AT mode or Model 30 mode: Writing a 1 to this bit enables the FDRQ, $\overline{FDACK}$, TC, and IRQ6 pins. Writing a 0 to this bit disables the $\overline{FDACK}$ and TC pins and TRI-STATE the FDRQ and the IRQ6 pins. This bit is a 0 after a reset when in these modes.

PS/2 mode: This bit is reserved, and the FDRQ, $\overline{FDACK}$, TC, and IRQ6 pins are always enabled. During a reset, the FDRQ, $\overline{FDACK}$, TC, and IRQ6 lines remain enabled, and D3 is 0.

D2 **Reset Controller:** Writing a 0 to this bit resets the controller. It remains in the reset condition until a 1 is written to this bit. A software reset does not affect the DSR, CCR, and other bits of the DOR. A software reset affects the Configure and Mode command bits (see Section 4.0 FDC Command Set Description). The minimum time that this bit must be low is 100 ns. Thus, toggling the Reset Controller bit during consecutive writes to the DOR is an acceptable method of issuing a software reset.

D1, D0 **Drive Select:** These two bits are binary encoded for the four drive selects DR0–DR3, so that only one drive select output is active at a time. (See bit 4 of FCR for further information.)

It is common programming practice to enable both the motor enable and drive select outputs for a particular drive. Table 3-2 below shows the DOR values to enable each of the four drives.

TABLE 3-2. Drive Enable Values

Drive	DOR Value
0	1Ch
1	2D
2	4E
3	8F

Note: The MTR3, MTR2, DRV3, DRV2 pins are only available in four-drive mode (bit 4 of FER is 1) and require external logic.

3.1.4 Tape Drive Register (TDR) Read/Write

The TDR register is the Tape Drive Register and the floppy disk controller media and drive type register. The register has three modes of operation (see Table 3-3):

Compatible PC-AT TDR mode. The register is used to assign a particular drive number to the tape drive support mode of the data separator. All other logical drives can be assigned as floppy drive support. Bits 2–7 are TRI-STATE during read.

Automatic Media Sense mode. Bits 5–7 are implemented, in addition to the bits of the Compatible PC-AT TDR mode. Bits 2–4 are reserved.

Enhanced mode. This is the PS/2 TDR mode. It uses all the register's bits for operation with PS/2 floppy drives.

The use of the TDR bits, for each of these modes, is shown in Table 3-3.

3.0 FDC Register Description (Continued)

TABLE 3-3. TDR Operation Modes

Mode	FCR Bit 0	ASC Bit 2	Bit	D7	D6	D5	D4	D3	D2	D1	D0
Compatible PC-AT TDR	1	0	DESC	X	X	X	X	X	X	TAPE SEL 1	TAPE SEL 0
			RESET COND	N/A	N/A	N/A	N/A	N/A	N/A	0	0
Automatic Media Sense	0	0	DESC	ED	HD	VALID DATA	X	X	X	TAPE SEL 1	TAPE SEL 0
			RESET COND	N/A	N/A	N/A	N/A	N/A	N/A	0	0
Enhanced	0 or 1	1	DESC	ED	HD	DRID1	DRID0	SWP1	SWP0	TAPE SEL 1	TAPE SEL 0
			RESET COND	N/A	N/A	N/A	N/A	0	0	0	0

D7 **Extra Density:** When bit 5 is 0, this media id bit is used with bit 6 to indicate the type of media currently in the active floppy drive. If bit 5 is 1, it is invalid. This bit holds MSEN1 pin value. See Table 3-4 for details regarding bits 5–7.

D6 **High Density:** When bit 5 is 0, this media id bit is used with bit 7 to indicate the type of media currently in the active floppy drive. If bit 5 is 1, it is invalid. This bit holds MSEN0/DRATE0 pin value. See Table 3-4 for details regarding bits 5–7.

Note: Bits 6 and 7 of TDR are undefined when DRID0,1 pins are configured as DRATE0,1.

D5 **Valid Data:** (For Automatic Media Sense mode) The state of bit 5 is determined by the state of the $\overline{\text{VLD0,1}}$ pins during reset. If this bit is 0, there is valid media id sense data in bits 7 and 6 of this register. Bit 5 holds $\overline{\text{VLD0}}$ when drive 0 is accessed, and media sense is configurfed. It holds $\overline{\text{VLD1}}$ when drive 1 is accessed, and media sense is configured. Otherwise, it is set to 1 to indicate that media information is not available. See Table 3-4 for details regarding bits 5–7.

D4, 5 **Drive ID0,1:** (For Enhanced mode)

Bits 4 and 5 are read only bits which hold DRID0,1 pins values.

TABLE 3-4. Media ID Bits Functions

Bit 7	Bit 6	Bit 5	Media Type
X	X	1	Invalid Data
0	0	0	5.25″
0	1	0	2.88M
1	0	0	1.44M
1	1	0	720k

D3, 2 Bits 3 and 2 are read/write bits that control bits control logical drive exchange.

When working with four drives encoding (bit 4 of FER is 1) the logical drive exchange is not performed.

00: No logical drive exchange.

01: logical drive exchange between drives 0 and 1 as done by bit 4 of FCR.

10: Logical drive exchange between drives 0 and 2. This bit allows software to exchange the physical floppy-disk control signals, assigned to drive 0 and 2. The $\overline{\text{DR0}}$, $\overline{\text{DR23}}$ and $\overline{\text{MTR0}}$ pins function is exchanged as follows:

$\overline{\text{DR2}}$ internal signal to $\overline{\text{DR0}}$ pin.

$\overline{\text{MTR2}}$ internal signal to $\overline{\text{MTR0}}$ pin.

$\overline{\text{DR0}}$ internal signal to $\overline{\text{DR23}}$ pin.

Note: Drive 3 is not exchanged together wth drive 2.

11: Reserved. Unpredictable results when 11 is configured.

D1, 0 **Tape Select 1, 0:** These bits assign a logical drive number to a tape drive. Drive 0 is not available as a tape drive and is reserved as the floppy disk boot drive. See Table 3-5 for the tape drive assignment values.

TABLE 3-5. Tape Drive Assignment Values

TAPESEL1	TAPESEL0	Drive Selected
0	0	None
0	1	1
1	0	2
1	1	3

3.0 FDC Register Description (Continued)

3.1.5 Main Status Register (MSR) Read Only

The read-only Main Status Register indicates the current status of the disk controller. The Main Status Register is always available to be read. One of its functions is to control the flow of data to and from the Data Register (FIFO). The Main Status Register indicates when the disk controller is ready to send or receive data through the Data Register. It should be read before each byte is transferred to or from the Data Register except during a DMA transfer. No delay is required when reading this register after a data transfer.

After a hardware or software reset, or recovery from a power-down state, the Main Status Register is immediately available to be read by the μP. It contains a value of 00h until the oscillator circuit has stabilized, and the internal registers have been initialized. When the FDC is ready to receive a new command, it reports an 80h to the μP. The system software can poll the MSR until it is ready. The worst case time allowed for the MSR to report an 80h value (RQM set) is 2.5 μs after reset or power up.

MSR

	D7	D6	D5	D4	D3	D2	D1	D0
DESC	RQM	DIO	NON DMA	CMD PROG	DRV3 BUSY	DRV2 BUSY	DRV1 BUSY	DRV0 BUSY
RESET COND	0	0	0	0	0	0	0	0

D7 **Request for Master:** Indicates that the controller is ready to send or receive data from the μP through the FIFO. This bit is cleared immediately after a byte transfer and is set again as soon as the disk controller is ready for the next byte. During a Non-DMA Execution phase, the RQM indicates the status of the interrupt pin.

D6 **Data I/O (Direction):** Indicates whether the controller is expecting a byte to be written to (0) or read from (1) the Data Register.

D5 **Non-DMA Execution:** Indicates that the controller is in the Execution Phase of a byte transfer operation in the Non-DMA mode. This mode can be used for multiple byte transfers by the μP in the Execution Phase via interrupts or software polling.

D4 **Command in Progress:** This bit is set after the first byte of the Command Phase is written. This bit is cleared after the last byte of the Result Phase is read. If there is no Result Phase in a command, the bit is cleared after the last byte of the Command Phase is written.

D3 **Drive 3 Busy:** Set after the last byte of the Command Phase of a Seek or Recalibrate command is issued for drive 3. Cleared after reading the first byte in the Result Phase of the Sense Interrupt Command for this drive.

D2 **Drive 2 Busy:** Same as above, but for drive 2.

D1 **Drive 1 Busy:** Same as above, but for drive 1.

D0 **Drive 0 Busy:** Same as above, but for drive 0.

3.1.6 Data Rate Select Register (DSR) Write Only

This write-only register is used to program the data rate, amount of write precompensation, power-down mode, and software reset. The data rate is programmed via the CCR, not the DSR, for PC-AT and PS/2 Model 30 and MicroChannel applications. Other applications can set the data rate in the DSR. The data rate of the floppy controller is determined by the most recent write to either the DSR or CCR. The DSR is unaffected by a software reset. A hardware reset sets the DSR to 02h, which corresponds to the default precompensation setting and 250 kbps.

DSR

	D7	D6	D5	D4	D3	D2	D1	D0
DESC	S/W RESET	LOW POWER	0	PRE-COMP2	PRE-COMP1	PRE-COMP0	DRATE1	DRATE0
RESET COND	0	0	0	0	0	0	1	0

D7 **Software Reset:** This bit has the same function as the DOR RESET (D2) except that this software reset is self-clearing.

D6 **Low Power:** A 1 to this bit puts the controller into the Manual Low Power mode. The oscillator and data separator circuits are turned off. Manual Low Power can also be accessed via the Mode command. The chip comes out of low power after a software reset, or access to the Data Register or Main Status Register.

D5 Undefined. Should be set to 0.

D4, 2 **Precompensation Select:** These three bits select the amount of write precompensation the floppy controller uses on the WDATA disk interface output. Table 3-6 shows the amount of precompensation used for each bit pattern. In most cases, the default values (Table 3-7) can be used; however, alternate values can be chosen for specific types of drives and media. Track 0 is the default starting track number for precompensation. The starting track number can be changed in the Configure command.

TABLE 3-6. Write Precompensation Delays

Bits 4, 3, 2	Precompensation Delay
111	0.0 ns
001	41.7 ns
010	83.3 ns
011	125.0 ns
100	166.7 ns
101	208.3 ns
110	250.0 ns
000	DEFAULT

TABLE 3-7. Default Precompensation Delays

Data Rate	Precompensation Delay
1 Mbps	41.7 ns
500 kbps	125.0 ns
300 kbps	125.0 ns
250 kbps	125.0 ns

D1, 0 **Data Rate Select 1,0:** These bits determine the data rate for the floppy controller. See Table 3-8 for the corresponding data rate for each value of D1, D0. The data rate select bits are unaffected by a software reset, and are set to 250 kbps after a hardware reset.

TABLE 3-8. Data Rate Select Encoding

Data Rate Select		Data Rate	
1	**0**	**MFM**	**FM**
1	1	1 Mbps	Illegal
0	0	500 kbps	250 kbps
0	1	300 kbps	150 kbps
1	0	250 kbps	125 kbps

Note: FM mode is not guaranteed by functional testing.

3.1.7 Data Register (FIFO) Read/Write

The FIFO (read/write) is used to transfer all commands, data, and status between the μP and the FDC. During the Command Phase, the μP writes the command bytes into the FIFO after polling the RQM and DIO bits in the MSR. During the Result Phase, the μP reads the result bytes from the FIFO after polling the RQM and DIO bits in the MSR.

Enabling the FIFO, and setting the FIFO threshold, is done via the Configure command. If the FIFO is enabled, only the Execution Phase byte transfers use the 16 byte FIFO. The FIFO is always disabled during the Command and Result Phases of a controller operation. A software reset will not disable enabled FIFO if the LOCK bit is set in the Lock Command. After a hardware reset, the FIFO is disabled to maintain compatibility with PC-AT systems.

The 16-byte FIFO can be used for DMA, Interrupt, or software polling type transfers during the execution of a read, write, format, or scan command. In addition, the FIFO can be put into a Burst or Non-Burst mode with the Mode command. In the Burst mode, FDRQ or IRQ6 remains active until all of the bytes have been transferred to or from the FIFO. In the Non-Burst mode, FDRQ or IRQ6 is deasserted for 350 ns to allow higher priority transfer requests to be serviced. The Mode command can also disable the FIFO for either reads or writes separately. The FIFO allows the system a larger latency without causing a disk overrun/underrun error. The FIFO is typically used with multitasking operating systems and/or when running systems at or above a 1 Mbps data rate. In its default state, the FIFO is disabled and contains a zero threshold. The default state is entered after a hardware reset.

Data Register (FIFO)

	D7	D6	D5	D4	D3	D2	D1	D0
DESC	Data [7:0]							
RESET COND	Byte Mode							

During the Execution Phase of a command involving data transfer to/from the FIFO, the system must respond to a data transfer service request based on the following formula:

Maximum Allowable Data Transfer Service Time

$$(THRESH + 1) \times 8 \times t_{DRP} - (16 \times t_{ICP})$$

This formula is good for all data rates with the FIFO enabled or disabled. THRESH is a four bit value programmed in the Configure command, which sets the FIFO threshold. If the FIFO is disabled, THRESH is zero in the above formula. The last term of the formula, $(16 \times t_{ICP})$ is an inherent delay due to the microcode overhead required by the FDC. This delay is also data rate dependent. See Table 9-1 for the t_{DRP} and t_{ICP} times. See Section 11.2.2 for a description of t_{DRP} and t_{ICP}.

The programmable FIFO threshold (THRESH) is useful in adjusting the floppy controller to the speed of the system. In other words, a slow system with a sluggish DMA transfer capability uses a high value of THRESH, giving the system more time to respond to a data transfer service request (FDRQ for DMA mode or IRQ6 for Interrupt mode). Conversely, a fast system with quick response to a data transfer service request would use a low value of THRESH.

3.1.8 Digital Input Register (DIR) Read Only

This diagnostic register is used to detect the state of the DSKCHG disk interface input and some diagnostic signals. The function of this register depends on its mode of operation. When in the PC-AT mode, the D6–D0 are TRI-STATE to avoid conflict with the fixed disk status register at the same address. DIR is unaffected by a software reset.

DIR—PC-AT Mode

	D7	D6	D5	D4	D3	D2	D1	D0
DESC	DSKCHG	X	X	X	X	X	X	X
RESET COND	N/A	N/A	N/A	N/A	N/A	N/A	N/A	N/A

D7 **Disk Changed:** Active high status of DSKCHG disk interface input. During power-down this bit is invalid, if it is read by the software.

D6–0 **Unused** by the FDC (at TRI-STATE). The bits are used by the Hard Disk Controller Status Register.

DIR—PS/2 Mode

	D7	D6	D5	D4	D3	D2	D1	D0
DESC	DSKCHG	1	1	1	1	DRATE1	DRATE0	$\overline{HIGH}$ $\overline{DEN}$
RESET COND	N/A	N/A	N/A	N/A	N/A	N/A	N/A	1

D7 **Disk Changed:** Active high status of DSKCHG disk interface input. During power-down this bit is invalid, if it is read by the software.

3.0 FDC Register Description (Continued)

D6–3 **Reserved:** Always 1.

D2–1 **Data Rate Select 1,0:** These bits indicate the status of the DRATE1–0 bits programmed through the DSR or CCR.

D0 **High Density:** This bit is low when the 1 Mbps or 500 kbps data rate is chosen, and high when the 300 kbps or 250 kbps data rate is chosen. This bit is independent of the IDENT value.

DIR—Model 30 Mode

	D7	D6	D5	D4	D3	D2	D1	D0
DESC	$\overline{\text{DSKCHG}}$	0	0	0	DMAEN	NOPRE	DRATE1	DRATE0
RESET COND	N/A	0	0	0	0	0	1	0

D7 **Disk Changed:** Active low status of DSKCHG disk interface input. During power-down this bit is invalid, if it is read by the software.

D6–4 **Reserved:** Always 0.

D3 **DMA Enable:** Active high status of the DMAEN bit in the DOR.

D2 **No Precompensation:** Active high status of the NOPRE bit in the CCR.

D1–0 **Data Rate Select 1,0:** These bits indicate the status of the DRATE 1,0 bits programmed through the DSR/CCR.

3.1.9 Configuration Control Register (CCR) Write Only

This is the write-only data rate register commonly used in PC-AT applications. This register is not affected by a software reset, and is set to 250 kbps after a hardware reset. The data rate of the floppy controller is determined by the last write to either the CCR or DSR.

CCR—PC-AT and PS/2 Modes

	D7	D6	D5	D4	D3	D2	D1	D0
DESC	0	0	0	0	0	0	DRATE1	DRATE0
RESET COND	N/A	N/A	N/A	N/A	N/A	N/A	1	0

D7–2 **Reserved:** Should be set to 0.

D1–0 **Data Rate Select 1,0:** These bits determine the data rate of the floppy controller. See Table 3-8 for the appropriate values.

CCR—Model 30 Mode

	D7	D6	D5	D4	D3	D2	D1	D0
DESC	0	0	0	0	0	NOPRE	DRATE1	DRATE0
RESET COND	N/A	N/A	N/A	N/A	N/A	N/A	1	0

D7–3 **Reserved:** Should be set to 0.

D2 **No Precompensation:** This bit can be set by software, but it has no functionality. It can be read by bit D2 of the DIR when in the Model 30 register mode. Unaffected by a software reset.

D1–0 **Data Rate Select 1,0:** These bits determine the data rate of the floppy controller. See Table 3-8 for the appropriate values.

3.2 RESULT PHASE STATUS REGISTERS

The Result Phase of a command contains bytes that hold status information. The format of these bytes is described below. Do not confuse these status bytes with the Main Status Register, which is a read only register that is always valid. The Result Phase status registers are read from the Data Register (FIFO) only during the Result Phase of certain commands (see Section 4.1 Command Set Summary). The status of each register bit is indicated when the bit is a 1.

3.2.1 Status Register 0 (ST0)

	D7	D6	D5	D4	D3	D2	D1	D0
DESC	IC	IC	SE	EC	0	HDS	DS1	DS0
RESET COND	0	0	0	0	0	0	0	0

D7–6 **Interrupt Code:**

00 = Normal Termination of Command.

01 = Abnormal Termination of Command. Execution of command was started, but was not successfully completed.

10 = Invalid Command Issued. Command issued was not recognized as a valid command.

11 = Internal drive ready status changed state during the drive polling mode. Only occurs after a hardware or software reset.

D5 **Seek End:** Seek, Relative Seek, or Recalibrate command completed by the controller. (Used during a Sense Interrupt command.)

D4 **Equipment Check:** After a Recalibrate command, Track 0 signal failed to occur. (Used during Sense Interrupt command.)

D3 Not Used. Always 0.

D2 **Head Select:** Indicates the active high status of the HDSEL pin at the end of the Execution Phase.

D1–0 **Drive Select 1,0:** These two binary encoded bits indicate the logical drive selected at the end of the Execution Phase.

00 = Drive 0 selected.

01 = Drive 1 selected.

10 = Drive 2 selected.

11 = Drive 3 selected.

3.2.2 Status Register 1 (ST1)

	D7	D6	D5	D4	D3	D2	D1	D0
DESC	ET	0	CE	OR	0	ND	NW	MA
RESET COND	0	0	0	0	0	0	0	0

D7 **End of Track:** Controller transferred the last byte of the last sector without the TC pin becoming active. The last sector is the End of Track sector number programmed in the Command Phase.

D6 Not Used. Always 0.

3.0 FDC Register Description (Continued)

D5 **CRC Error:** If this bit is set and bit 5 of ST2 is clear, then there was a CRC error in the Address Field of the correct sector. If bit 5 of ST2 is also set, then there was a CRC error in the Data Field.

D4 **Overrun:** Controller was not serviced by the μP soon enough during a data transfer in the Execution Phase. For read operations, indicates a data overrun. For write operations, indicates a data underrun.

D3 Not Used. Always 0.

D2 **No Data:** Three possible problems:

1. Controller cannot find the sector specified in the Command Phase during the execution of a Read, Write, Scan, or Verify command. An address mark was found however, so it is not a blank disk.
2. Controller cannot read any Address Fields without a CRC error during a Read ID command.
3. Controller cannot find starting sector during execution of Read A Track command.

D1 **Not Writable:** Write Protect pin is active when a Write or Format command is issued.

D0 **Missing Address Mark:** If bit 0 of ST2 is clear then the controller cannot detect any Address Field Address Mark after two disk revolutions. If bit 0 of ST2 is set then the controller cannot detect the Data Field Address Mark after finding the correct Address Field.

3.2.3 Status Register 2 (ST2)

	D7	D6	D5	D4	D3	D2	D1	D0
DESC	0	CM	CD	WT	SEH	SNS	BT	MD
RESET COND	0	0	0	0	0	0	0	0

D7 Not Used. Always 0.

D6 **Control Mark:** Controller tried to read a sector which contained a deleted data address mark during execution of Read Data or Scan commands. Or, if a Read Deleted Data command was executed, a regular address mark was detected.

D5 **CRC Error in Data Field:** Controller detected a CRC error in the Data Field. Bit 5 of ST1 is also set.

D4 **Wrong Track:** Only set if desired sector is not found, and the track number recorded on any sector of the current track is different from the track address specified in the Command Phase.

D3 **Scan Equal Hit:** ''Equal'' condition satisfied during any Scan command.

D2 **Scan Not Satisfied:** Controller cannot find a sector on the track which meets the desired condition during any Scan command.

D1 **Bad Track:** Only set if the desired sector is not found, the track number recorded on any sector on the track is FF (hex) indicating a hard error in IBM format, and is different from the track address specified in the Command Phase.

D0 **Missing Address Mark in Data Field:** Controller cannot find the Data Field AM during a Read, Scan, or Verify command. Bit 0 of ST1 is also set.

3.2.4 Status Register 3 (ST3)

	D7	D6	D5	D4	D3	D2	D1	D0
DESC	0	WP	1	TK0	1	HDS	DS1	DS0
RESET COND	0	0	1	0	1	0	0	0

D7 Not Used. Always 0.

D6 **Write Protect:** Indicates active high status of the WP pin.

D5 Not Used. Always 1.

D4 **Track 0:** Indicates active high status of the TRK0 pin.

D3 Not Used. Always 1.

D2 **Head Select:** Indicates the active high status of the HD bit in the Command Phase.

D1–D0 **Drive Select 1,0:** These two binary encoded bits indicate the DS1–DS0 bits in the Command Phase.

4.0 FDC Command Set Description

This section presents the FDC command set—full description in Section 4.1 and a working summary in Section 4.2. Each command contains a unique first command byte, the opcode byte, which tells the controller how many (0 or more) command bytes to expect. The information for each command is displayed using the structure shown in *Figure 4-1*.

If an invalid command byte is issued to the controller, it immediately enters the Result Phase and the status is 80h signifying an Invalid Command.

I/O Operation

Opcode
Command Byte 1
Command Byte 2
. . .
Command Byte n

FIGURE 4-1. FDC Command Structure

4.1 COMMAND DESCRIPTIONS

4.1.1 Configure Command

The Configure Command controls some operation modes of the controller. It should be issued during the initialization of the FDC after power-up. These bits are set to their default values after a hardware reset. The value of each bit after a software reset is explained. The default value of each bit is denoted by a ''bullet'' to the left of each item.

Command Phase:

0	0	0	1	0	0	1	1
0	0	0	0	0	0	0	0
0	EIS	FIFO	POLL	THRESH			
PRETRK							

Execution Phase: Internal registers written.

Result Phase: None.

EIS: Enable Implied Seeks. Default after a software reset.

- •**0** = Implied seeks disabled through Configure command. Implied seeks can still be enabled through the Mode command when EIS = 0.
- **1** = Implied seeks enabled for a read, write, scan, or verify operation. A seek and sense interrupt operation is performed prior to the execution of the read, write, scan, or verify operation. The IPS bit does not need to be set.

FIFO: Enable FIFO for Execution Phase data transfers. Default after a software reset if the LOCK bit is 0. If the LOCK bit is 1, then the FIFO bit retains its previous value after a software reset.

- **0** = FIFO enabled for both reads and writes.
- •**1** = FIFO disabled.

POLL: Disable for Drive Polling Mode. Default after a software reset.

- •**0** = Enable drive polling mode. An interrupt is generated after a reset.
- **1** = Disable drive polling mode. If the Configure command is issued within 500 μs of a hardware or software reset, then an interrupt is not generated. In addition, the use of the four Sense Interrupt commands to clear the ''Ready Changed State'' of the four logical drives is not required.

THRESH: The FIFO threshold in the Execution Phase of read and write data transfers. Programmable from 00h to 0Fh. Defaults to 00h after a software reset if the LOCK bit is 0. If the LOCK bit is 1, THRESH retains its value. A high value of THRESH is suited for slow response systems, and a low value of THRESH is better for fast response systems.

PRETRK: Starting track number for write precompensation. Programmable from track 0 (''00'') to track 255 (''FF''). Defaults to track 0 (''00'') after a software reset if the LOCK bit is 0. If the LOCK bit is 1, then PRETRK retains its value.

4.1.2 Dumpreg Command

The Dumpreg command is designed to support system runtime diagnostics, application software development and debug. This command has a one-byte command phase and a 10-byte result phase. The Result Phase returns the values of parameters set in other commands. That is, the PTR (Present Track Register) contains the least significant byte of the track the microcode has stored for each drive. The Step Rate Time, Motor Off and Motor On Times, and the DMA bit are all set in the Specify command.

The sixth byte of the result phase varies depending on what commands have been previously executed. If a format command has previously been issued, and no reads or writes have been issued since then, this byte contains the Sectors per track value. If a read or a write command has been executed more recently than a format command, this byte contains the End of Track value. The LOCK bit is set in the Lock command. The eighth result byte also contains the bits programmed in the Perpendicular Mode command. The last two bytes of the Dumpreg Result Phase are set in the Configure command. After a hardware or software reset, the parameters in the result bytes are set to their appropriate default values.

Note: Some of these parameters are unaffected by a software reset, depending on the state of the LOCK bit. See the Lock Command for further information.

Command Phase:

0	0	0	0	1	1	1	0

Execution Phase: Internal registers read.

Result Phase:

PTR Drive 0							
PTR Drive 1							
PTR Drive 2							
PTR Drive 3							
Step Rate Time				Motor Off Time			
Motor On Time							DMA
Sector per Track/End of Track (Note)							
LOCK	0	DC3	DC2	DC1	DC0	GAP	WG
0	EIS	FIFO	POLL	THRESH			
PRETRK							

Note: Sectors per Track parameter returned if last command issued was Format. End of Track parameter returned if last command issued was Read or Write.

4.1.3 Format Track Command

This command formats one track on the disk in IBM, ISO, or Perpendicular format. After the index hole is detected, data patterns are written on the disk including all gaps, Address Marks, Address Fields, and Data Fields. The exact format is determined by the following parameters:

1. The MFM bit in the Opcode (first command) byte, which determines the format of the Address Marks and the encoding scheme.
2. The IAF bit in the Mode command, which selects between IBM and ISO format.
3. The WGATE and GAP bits in the Perpendicular Mode command, which select between the conventional and Toshiba Perpendicular format.
4. The Bytes per Sector code, which determines the sector size.
5. The Sector per Track parameter, which determines how many sectors are formatted on the track.
6. The Data Pattern byte, which is used as the filler byte in the Data Field of each sector.

4.0 FDC Command Set Description (Continued)

Command Phase:

0	MFM	0	0	1	1	0	1
X	X	X	X	X	HD	DR1	DR0
Bytes per Sector							
Sectors per Track							
Format Gap							
Data Pattern							

Execution Phase: System transfers four ID bytes (track, head, sector, bytes/sector) per sector to the floppy controller via DMA or Non-DMA modes. The entire track is formatted. The data block in the Data Field of each sector is filled with the data pattern byte.

Result Phase:

Status Register 0
Status Register 1
Status Register 2
Undefined
Undefined
Undefined
Undefined

To allow for flexible formatting, the μP must supply the four Address Field bytes (track, head, sector, bytes per sector code) for each sector formatted during the Execution Phase. This allows for non-sequential sector interleaving. This transfer of bytes from the μP to the controller can be done in the DMA or Non-DMA mode, with the FIFO enabled or disabled.

The Format Gap byte in the Command Phase is dependent on the data rate and type of disk drive, and controls the length of GAP3. Some typical values for the programmable GAP3 are given in Table 4-1. *Figure 4-2* shows the track format for each of the formats recognized by the format command. Table 4-2 shows some typical values for the Format GAP3 based on media type. The Format command terminates when the index hole is detected a second time, at which point an interrupt is generated. Only the first three status bytes in the Result Phase are significant.

TABLE 4-1. Typical Format GAP3 Length Values Based on Drive Data Rate

Mode	Sector Size (Decimal)	Sector Code (Hex)	EOT (Hex)	Sector Gap (Hex) (Note 1)	Format GAP3 (Hex) (Note 2)
250 kbps MFM	256	01	12	0A	0C
	256	01	10	20	32
	512	02	08	2A	50
	512	02	09	2A	50
	1024	03	04	80	F0
	2048	04	02	C8	FF
	4096	05	01	C8	FF
500 kbps MFM	256	01	1A	0E	36
	512	02	0F	1B	54
	512	02	12	1B	6C
	1024	03	08	35	74
	2048	04	04	99	FF
	4096	05	02	C8	FF
	8192	06	01	C8	FF

TABLE 4-2. Typical Format GAP3 Length Values Based on PC Compatible Diskette Media

Media Type	Sector Size Decimal	Sector Code Hex	EOT Hex	Sector Gap Hex	Format GAP3 Hex
360k	512	02	09	2A	50
1.2M	512	02	0F	1B	54
720k	512	02	09	1B	50
1.44M	512	02	12	1B	6C
2.88M (Note 3)	512	02	24	1B	53

Note 1: Sector Gap refers to the Intersector Gap Length parameter specified in the Command Phase of the Read, Write, Scan, and Verify commands. Although this is the recommended value, the FDC treats this byte as a don't care in the Read, Write, Scan, and Verify commands.

Note 2: Format Gap is the suggested value to use in the Format Gap parameter of the Format command. This is the programmable GAP3 as shown in *Figure 4-1*.

Note 3: The 2.88M diskette media is a Barium Ferrite media intended for use in Perpendicular Recording drives at data rates up to 1 Mbps.

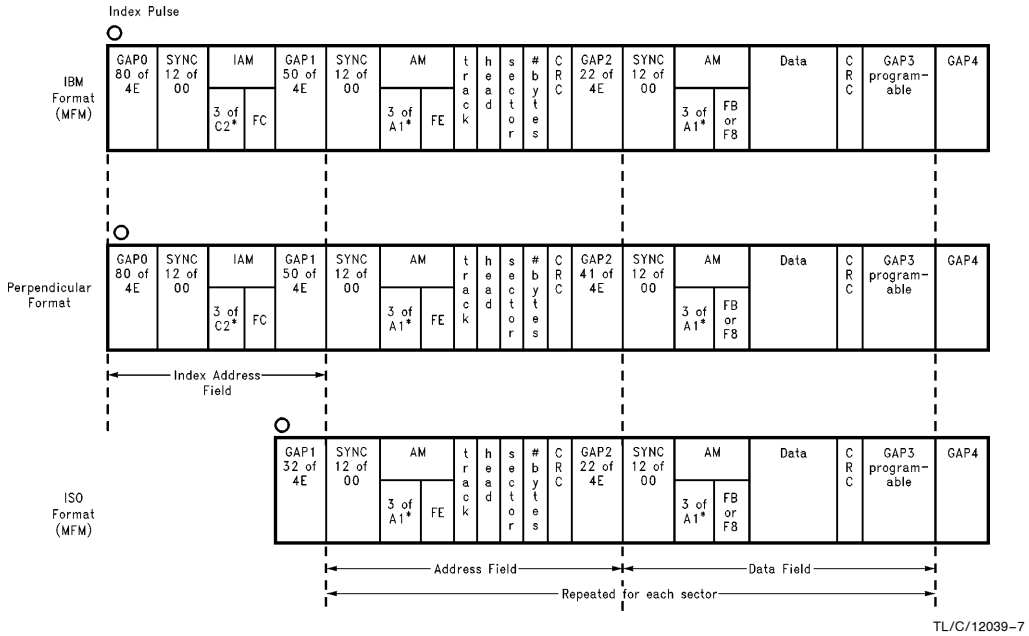

TL/C/12039–7

Notes:

A1* = Data Pattern of A1, Clock Pattern of 0A

C2* = Data Pattern of C2, Clock Pattern of 14

All byte counts in decimal

All byte values in hex

CRC uses standard polynomial $x^{16} + x^{12} + x^5 + 1$

Perpendicular Format GAP2 = 41 bytes for 1 Mbps and 2 Mbps.

All other data rates use GAP2 = 22 bytes

FIGURE 4-2. IBM, Perpendicular, and ISO Formats Supported by the Format Command

4.1.4 Invalid Command

If an invalid command (illegal Opcode byte in the Command Phase) is received by the controller, the controller responds with ST0 in the Result Phase. The controller does not generate an interrupt during this condition. Bits 6 and 7 in the MSR are both set to a 1, indicating to the μP that the controller is in the Result Phase and the contents of ST0 must be read. The system reads an 80h value from ST0 indicating an invalid command was received.

Command Phase:

Invalid Op Codes

Execution Phase: None.

Result Phase:

Status Register 0 (80h)

4.1.5 Lock Command

The Lock command allows the user full control of the FIFO parameters after a software reset. If the LOCK bit is set to 1, then the FIFO, THRESH, and PRETRK bits in the Configure command are not affected by a software reset. In addition, the FWR, FRD, and BST bits in the Mode command are unaffected by a software reset. If the LOCK is 0 (default after a hardware reset), then the above bits are set to their default values after a software reset. This command is useful if the system designer wishes to keep the FIFO enabled and retain the other FIFO parameter values (such as THRESH) after a software reset.

After the command byte is written, the result byte must be read before continuing to the next command. The execution of the Lock command is not performed until the result byte is read by the μP. If the part is reset after the command byte is written but before the result byte is read, then the Lock command execution is not performed. This is done to prevent accidental execution of the Lock command.

Command Phase:

LOCK	0	0	1	0	1	0	0

Execution Phase: Internal Lock register is written.

Result Phase:

0	0	0	LOCK	0	0	0	0

4.1.6 Mode Command

This command is used to select the special features of the controller. The bits for the Command Phase bytes are shown in Section 4.1, Command Set Summary, and their function is described below. These bits are set to their default values after a hardware reset. The default value of each bit is denoted by a "bullet" to the left of each item. The value of each parameter after a software reset is explained.

Command Phase:

0	0	0	0	0	0	0	1
TMR	IAF	IPS	0	LOW PWR		1	ETR
FWR	FRD	BST	R255	0	0	0	0
DENSEL		BFR	WLD	Head Settle			
0	0	0	0	0	RG	0	PU

Execution Phase: Internal registers are written.

Result Phase: None.

TMR: Motor Timer mode. Default after a software reset.

- •**0** = Timers for motor on and motor off are defined for Mode 1. (See Specify command.)
- **1** = Timers for motor on and motor off are defined for Mode 2. (See Specify command.)

IAF: Index Address Format. Default after a software reset.

- •**0** = The controller formats tracks with the Index Address Field included. (IBM and Perpendicular format.)
- **1** = The controller formats tracks without including the Index Address Field. (ISO format.)

IPS: Implied Seek. Default after a software reset.

- •**0** = The implied seek bit in the command byte of a read, write, scan, or verify is ignored. Implied seeks could still be enabled by the EIS bit in the Configure command.
- **1** = The IPS bit in the command byte of a read, write, scan, or verify is enabled so that if it is set, the controller performs seek and sense interrupt operations before executing the command.

LOW PWR: Low Power mode. Default after a software reset.

- •**00** = Completely disable the low power mode.
- **01** = Automatic low power. For 500 kbps operation, go into low power mode 512 ms after the head unload timer times out. For 250 kbps operation the timeout period is doubled to 1s.
- **10** = Manual low power. Go into low power mode now.
- **11** = Not used.

ETR: Extended Track Range. Default after a software reset.

- •**0** = Track number is stored as a standard 8-bit value compatible with the IBM, ISO, and Perpendicular formats. This allows access of up to 256 tracks during a seek operation.
- **1** = Track number is stored as a 12-bit value. The upper four bits of the track value are stored in the upper four bits of the head number in the sector Address Field. This allows access of up to 4096 tracks during a seek operation. With this bit set, an extra byte is required in the Seek Command Phase and Sense Interrupt Result Phase.

FWR: FIFO Write Disable for μP write transfers to controller. Default after a software reset if LOCK is 0. If LOCK is 1, FWR retains its value after a software reset.

Note: This bit is only valid if the FIFO is enabled in the Configure command. If the FIFO is not enabled in the Configure command, then this bit is a don't care.

- •**0** = Enable FIFO. μP write transfers druing the Execution Phase use the internal FIFO.
- **1** = Disable FIFO. All write data transfers take place without the FIFO.

FRD: FIFO Read Disable for μP read transfers from controller. Default after a software reset if LOCK is 0. If LOCK is 1, FRD retains its value after a software reset.

Note: This bit is only valid if the FIFO is enabled in the Configure command. If the FIFO is not enabled in the Configure command, then this bit is a don't care.

•**0** = Enable FIFO. μP read transfers during the Execution Phase use the internal FIFO.

1 = Disable FIFO. All read data transfers take place without the FIFO.

BST: Burst Mode Disable. Default after a software reset if LOCK is 0. If LOCK is 1, BST retains its value after a software reset.

Note: This bit is only valid if the FIFO is enabled in the Configure command. If the FIFO is not enabled in the Configure command, then this bit is a don't care.

•**0** = Burst mode enabled for FIFO Execution Phase data transfers.

1 = Non-Burst mode enabled. The DRQ or IRQ6 pin is strobed once for each byte to be transferred while the FIFO is enabled.

R255: Recalibrate Step Pulses. The bit determines the maximum number of recalibrate step pulses the controller issues before terminating with an error. Default after a software reset.

•**0** = Maximum of 85 recalibrate step pulses. If ETR = 1, controller issues 3925 recalibrate step pulses maximum.

1 = Maximum of 255 recalibrate step pulses. If ETR = 1, controller issues 4095 maximum recalibrate step pulses.

DENSEL: Density Select Pin Configuration. This 2-bit value configures the Density Select output to one of three possible modes. The default mode configures the DENSEL pin according to the state of the IDENT input pin after a data rate has been selected. That is, if IDENT is high, the DENSEL pin is active high for the 500 kbps/1 Mbps data rates. If IDENT is low, the DENSEL pin is active low for the 500 kbps/1 Mbps data rates. See Table 4-3. In addition to these modes, the DENSEL output can be set to always low or always high, as shown in Table 4-4. This allows the user more flexibility with new drive types.

TABLE 4-3. DENSEL Default Encoding

Data Rate	DENSEL Pin Definition	
	IDENT = 1	IDENT = 0
250 kbps	Low	High
300 kbps	Low	High
500 kbps	High	Low
1 Mbps*	High	Low

*When TUP bit 1 = 0, a Data Rate of 1 Mbps is selected.

TABLE 4-4. DENSEL Encoding

Bit 1	Bit 0	DENSEL Pin Definition
0	0	Pin Low
0	1	Pin High
1	0	Undefined
1	1	DEFAULT

BFR: CMOS Disk Interface Buffer Enable.

•**0** = Drive output signals configured as standard 4 mA push-pull outputs (actually 40 mA sink, 4 mA source).

1 = Drive output signals configured as 40 mA open-drain outputs.

WLD: Scan Wild Card.

•**0** = An FFh from either the μP or the disk during a Scan command is interpreted as a wildcard character that always matches true.

1 = The Scan commands do not recognize FFh as a wildcard character.

Head Settle: Time allowed for read/write head to settle after a seek during an Implied Seek operation. This is controlled as shown in Table 4-5 by loading a 4-bit value for N. (The default value for N is 8.)

TABLE 4-5. Head Settle Time Calculation

Data Rate (kbits/sec)	Multiplier (4 Bit Value)	Head Settle Time (ms)
250	N × 8	0–120
300	N × 6.666	0–100
500	N × 4	0–60
1000	N × 2	0–30

RG: Read Gate Diagnostic.

•**0** = Enable DSKCHG disk interface input for normal operation.

1 = Enable DSKCHG to act as an external Read Gate input signal to the Data Separator. This is intended as a test mode to aid in evaluation of the Data Separator.

PU: PUMP Pulse Output Diagnostic.

•**0** = Enable MFM output pin for normal operation.

1 = Enable the MFM output to act as an internal serial data in signal.

4.1.7 NSC Command

The NSC command can be used to distinguish between the FDC versions and the 82077. The Result Phase byte uniquely identifies the floppy controller as a PC87334, which returns a value of 73h. The 82077 and DP8473 return a value of 80h, signifying an invalid command. The lower four bits of this result byte are subject to change by National, and reflects the particular version of the floppy disk controller part.

Command Phase:

0	0	0	1	1	0	0	0

Execution Phase: None.

Result Phase:

0	1	1	1	0	0	1	1

4.1.8 Perpendicular Mode Command

The Perpendicular Mode command is designed to support the unique Format and Write Data requirements of Perpendicular (Vertical) Recording disk drives (4 Mbyte unformatted capacity). The Perpendicular Mode command configures each of the four logical drives as a perpendicular or conventional disk drive. Configuration of the four logical disk drives is done via the D3–0 bits, or with the GAP and WG control bits. This command should be issued during the initialization of the floppy controller.

Command Phase:

0	0	0	1	0	0	1	0
OW	0	DC3	DC2	DC1	DC0	GAP	WG

Execution Phase: Internal registers are written.

Result Phase: None.

Perpendicular Recording drives operate in ''Extra High Density'' mode at 1 Mbps and are downward compatible with 1.44 Mbyte and 720 kbyte drives at 500 kbps (High Density) and 250 kbps (Double Density) respectively. If perpendicular drives are present in the system, this command should be issued during initialization of the floppy controller, which configures each drive as perpendicular or conventional. Then, when a drive is accessed for a Format or Write Data command, the floppy controller adjusts the Format or Write Data parameters based on the data rate selected (see Table 4-6).

TABLE 4-6. Effect of Drive Mode and Data Rate on Format and Write Commands

Data Rate	Drive Mode	GAP2 Length Written during Format	Portion of GAP2 Re-Written by Write Data Command
250 kbps/300 kbps/500 kbps	Conventional Perpendicular	22 Bytes 22 Bytes	0 Bytes 19 Bytes
1 Mbps	Conventional Perpendicular	22 Bytes 41 Bytes	0 Bytes 38 Bytes

TABLE 4-7. Effect of GAP and WG on Format and Write Commands

GAP	WG	Mode Description	GAP2 Length Written during Format	Portion of GAP2 Re-Written by Write Data Command
0	0	Conventional	22 Bytes	0 Bytes
0	1	Perpendicular (500 kbps)	22 Bytes	19 Bytes
1	0	Reserved (Conventional)	22 Bytes	0 Bytes
1	1	Perpendicular (1 Mbps)	41 Bytes	38 Bytes

Looking at the second command byte, DC3–0 corresponds to the four logical drives.

A 0 written to DCn sets drive n to conventional mode, and a 1 sets drive n to perpendicular mode. The OW (Overwrite) bit offers additional control. When OW = 1, the values of DC3–0 (drive configuration bits) are changeable. When OW = 0, the internal values of DC3–0 are unaffected, regardless of what is written to DC3–0.

The function of the DCn bits must also be qualified by setting both WG and GAP to 0. If WG and GAP are used (i.e., not set to 00), they override whatever is programmed in the DCn bits. Table 4-7 indicates the operation of the FDC based on the values of GAP and WG. Note that when GAP and WG are both 0, the DCn bits are used to configure each logical drive as conventional or perpendicular. DC3–0 is unaffected by a software reset, but WG and GAP are both cleared to 0 after a software reset. A hardware reset resets all the bits to zero (conventional mode for all drives). The Perpendicular Mode command bits may be rewritten at any time.

Note: When in the Perpendicular Mode for any drive at any data rate selected by the DC3–0 bits, write precompensation is set to zero.

Perpendicular Recording type disk drives have a Pre-Erase Head which leads the Read/Write Head by 200 μm, which translates to 38 bytes at the 1 Mbps data transfer rate (19 bytes at 500 kbps). The increased spacing between the two heads requires a larger GAP2 between the Address Field and Data Field of a sector at 1 Mbps. (See Perpendicular Format in Table 4-1.) This GAP2 length of 41 bytes (at 1 Mbps) ensures that the Preamble in the Data Field is completely ''pre-erased'' by the Pre-Erase Head. Also, during Write Data operations to a perpendicular drive, a portion of GAP2 must be rewritten by the controller to guarantee that the Data Field Preamble has been pre-erased (see Table 4-6).

4.1.9 Read Data Command

The Read Data command reads logical sectors containing a Normal Data Address Mark (AM) from the selected drive and makes the data available to the host μP. After the last Command Phase byte is written, the controller simulates the Motor On time for the selected drive internally. The user must turn on the drive motor directly by enabling the appropriate drive and motor select disk interface outputs with the Digital Output Register (DOR).

If Implied Seeks are enabled, the controller performs a Seek operation to the track number specified in the Command Phase. The controller also issues a Sense Interrupt for the seek and waits the Head Settle time specified in the Mode command.

The correct ID information (track, head, sector, bytes per sector) for the desired sector must be specified in the command bytes. See Table 4-8 Sector Size Selection for details on the bytes per sector code. In addition, the End of Track Sector Number (EOT) should be specified, allowing the controller to read multiple sectors. The Data Length byte is a don't care and should be set to FFh.

TABLE 4-8. Sector Size Selection

Bytes per Sector Code	Number of Bytes in Data Field
0	128
1	256
2	512
3	1024
4	2048
5	4096
6	8192
7	16384

The controller then starts the Data Separator and waits for the Data Separator to find the next sector Address Field. The controller compares the Address Field ID information (track, head, sector, bytes per sector) with the desired ID specified in the Command Phase. If the sector ID bytes do not match, then the controller waits for the Data Separator to find the next sector Address Field. The ID comparison process repeats until the Data Separator finds a sector Address Field ID that matches that in the command bytes, or until an error occurs. Possible errors are:

1. The μP aborted the command by writing to the FIFO. If there is no disk in the drive, the controller hangs up. The μP must then take the controller out of this hung state by writing a byte to the FIFO. This puts the controller into the Result Phase.
2. Two index pulses were detected since the search began, and no valid ID has been found. If the track address ID differs, the WT bit or BT bit (if the track address is FFh) is set in ST2. If the head, sector, or bytes per sector code did not match, the ND bit is set in ST1. If the Address Field AM was never found, the MA bit is set in ST1.
3. The Address Field was found with a CRC error. The CE bit is set in ST1.

Once the desired sector Address Field is found, the controller waits for the Data Separator to find the subsequent Data Field for that sector. If the Data Field (normal or deleted) is not found within the expected time, the controller terminates the operation and enters the Result Phase (MD is set in ST2). If a Deleted Data Mark is found and Skip Flag (SK) was set in the Opcode command byte, the controller skips this sector and searches for the next sector Address Field as described above. The effect of SK on the Read Data command is summarized in Table 4-9.

4.0 FDC Command Set Description (Continued)

Having found the Data Field, the controller then transfers data bytes from the disk drive to the host (described in Section 5.3 Controller Phases) until the bytes per sector count has been reached, or the host terminates the operation (through TC, end of track, or implicitly through overrun). The controller then generates the CRC for the sector and compares this value with the CRC at the end of the Data Field.

Having finished reading the sector, the controller continues reading the next logical sector unless one or more of the following termination conditions occurred:

1. The DMA controller asserted TC. The IC bits in ST0 are set to Normal Termination.
2. The last sector address (of side 1 if MT was set) was equal to EOT. The EOT bit in ST1 is set. The IC bits in ST0 are set to Abnormal Termination. This is the expected condition during Non-DMA transfers.
3. Overrun error. The OR bit in ST1 is set. The IC bits in ST0 are set to Abnormal Termination. If the μP cannot service a transfer request in time, the last correctly read byte is transferred.
4. CRC error. The CE bit in ST1 and the CD bit in ST2 are set. The IC bits in ST0 are set to Abnormal Termination.

If Multi-Track Selector (MT) was set in the Opcode command byte, and the last sector of side 0 has been transferred, the controller then continues with side 1.

Upon terminating the Execution Phase of the Read Data command, the controller asserts IRQ6, indicating the beginning of the Result Phase. The μP must then read the result bytes from the FIFO. The values that are read back in the result bytes are shown in Table 4-10. If an error occurs, the result bytes indicate the sector read when the error occurred.

Command Phase:

MT	MFM	SK	0	0	1	1	0
IPS	X	X	X	X	HD	DR1	DR0
Track Number							
Drive Head Number							
Sector Number							
Bytes per Sector							
End of Track Sector Number							
Intersector Gap Length							
Data Length							

Execution Phase: Data read from disk drive is transferred to system via DMA or Non-DMA modes.

Result Phase:

Status Register 0
Status Register 1
Status Register 2
Track Number
Head Number
Sector Number
Bytes per Sector

TABLE 4-9. SK Effect on the Read Data Command

SK	Data Type	Sector Read ?	CM Bit (ST2)	Description of Results
0	Normal	Y	0	Normal Termination
0	Deleted	Y	1	No Further Sectors Read
1	Normal	Y	0	Normal Termination
1	Deleted	N	1	Sector Skipped

TABLE 4-10. Result Phase Termination Values with No Error

MT	HD	Last Sector	ID Information at Result Phase			
			Track	Head	Sector	Bytes/Sector
0	0	< EOT	NC	NC	S + 1	NC
0	0	= EOT	T + 1	NC	1	NC
0	1	< EOT	NC	NC	S + 1	NC
0	1	= EOT	T + 1	NC	1	NC
1	0	< EOT	NC	NC	S + 1	NC
1	0	= EOT	NC	1	1	NC
1	1	< EOT	NC	NC	S + 1	NC
1	1	= EOT	T + 1	0	1	NC

EOT = End of Track Sector Number from Command Phase
NC = No Change in Value
S = Sector Number last operated on by controller
T = Track Number programmed in Command Phase

TABLE 4-11. SK Effect on the Read Deleted Data Command

SK	Data Type	Sector Read ?	CM Bit (ST2)	Description of Results
0	Normal	Y	1	No Further Sectors Read
0	Deleted	Y	0	Normal Termination
1	Normal	N	1	Sector Skipped
1	Deleted	Y	0	Normal Termination

4.1.10 Read Deleted Data Command

The Read Deleted Data command reads logical sectors containing a Deleted Data AM from the selected drive and makes the data available to the host μP. This command is identical to the Read Data command, except for the setting of the CM bit in ST2 and the skipping of sectors. The effect of SK on the Read Deleted Data command is summarized in Table 4-11. See Table 4-10 for the state of the result bytes for a Normal Termination of the command.

Command Phase:

MT	MFM	SK	0	1	1	0	0
IPS	X	X	X	X	HD	DR1	DR0
Track Number							
Drive Head Number							
Sector Number							
Bytes per Sector							
End of Track Sector Number							
Intersector Gap Length							
Data Length							

Execution Phase: Data read from disk drive is transferred to system via DMA or Non-DMA modes.

Result Phase:

Status Register 0
Status Register 1
Status Register 2
Track Number
Head Number
Sector Number
Bytes per Sector

4.1.11 Read ID Command

The Read ID command finds the next available Address Field and returns the ID bytes (track, head, sector, bytes per sector) to the μP in the Result Phase. There is no data transfer during the Execution Phase of this command. An interrupt is generated when the Execution Phase is completed.

The controller first simulates the Motor On time for the selected drive internally. The user must turn on the drive motor directly by enabling the appropriate drive and motor select disk interface outputs with the Digital Output Register (DOR). The Read ID command does not perform an implied seek.

After waiting the Motor On time, the controller starts the Data Separator and waits for the Data Separator to find the next sector Address Field. If an error condition occurs, the IC bits in ST0 are set to Abnormal Termination, and the controller enters the Result Phase. Possible errors are:

1. The μP aborted the command by writing to the FIFO. If there is no disk in the drive, the controller hangs up. The μP must then take the controller out of this hung state by writing a byte to the FIFO. This puts the controller into the Result Phase.
2. Two index pulses were detected since the search began, and no AM has been found. If the Address Field AM was never found, the MA bit is set in ST1.

Command Phase:

0	MFM	0	0	1	0	1	0
X	X	X	X	X	HD	DR1	DR0

Execution Phase: Controller reads first ID Field header bytes it can find and reports these bytes to the system in the result bytes.

Result Phase:

Status Register 0
Status Register 1
Status Register 2
Track Number
Head Number
Sector Number
Bytes per Sector

4.1.12 Read A Track Command

The Read A Track command reads sectors in physical order from the selected drive and makes the data available to the host. This command is similar to the Read Data command with the following exceptions:

1. The controller waits for the index pulse before searching for a sector Address Field. If the μP writes to the FIFO before the index pulse, the command enters the Result Phase with the IC bits in ST0 set to Abnormal Termination.
2. A comparison of the sector Address Field ID bytes will be performed, except for the sector number. The internal sector address is set to 1, and then incremented for each successive sector read.

3. If the Address Field ID comparison fails, the controller sets ND in ST1, but continues to read the sector. If there is a CRC error in the Address Field, the controller sets CE in ST1, but continues to read the sector.
4. Multi-track and Skip operations are not allowed. SK and MT should be set to 0.
5. If there is a CRC error in the Data Field, the controller sets CE in ST1 and CD in ST2, but continues reading sectors.
6. The controller reads a maximum of EOT physical sectors. There is no support for multi-track reads.

Command Phase:

0	MFM	0	0	0	0	1	0
IPS	X	X	X	X	HD	DR1	DR0
Track Number							
Drive Head Number							
Sector Number							
Bytes per Sector							
End of Track Sector Number							
Intersector Gap Length							
Data Length							

Execution Phase: Data read from disk drive is transferred to system via DMA or non-DMA modes.

Result Phase:

Status Register 0
Status Register 1
Status Register 2
Track Number
Head Number
Sector Number
Bytes per Sector

4.1.13 Recalibrate Command

The Recalibrate command is very similar to the Seek command. The controller sets the Present Track Register (PTR) of the selected drive to zero. It then steps the head of the selected drive out until the TRK0 disk interface input signal goes active, or until the maximum number of step pulses have been issued. See Table 4-12 for the maximum recalibrate step pulse values based on the R255 and ETR bits in the Mode command. If the number of tracks on the disk drive exceeds the maximum number of recalibrate step pulses, another Recalibrate command may need to be issued.

TABLE 4-12. Maximum Recalibrate Step Pulses Based on R255 and ETR

R255	ETR	Maximum Recalibrate Step Pulses
0	0	85 (default)
1	0	255
0	1	3925
1	1	4095

After the last command byte is issued, the DRx BUSY bit is set in the MSR for the selected drive. The controller will simulate the Motor On time, and then enter the Idle Phase. The execution of the actual step pulses occur while the controller is in the Drive Polling Phase. An interrupt will be generated after the TRK0 signal is asserted, or after the maximum number of recalibrate step pulses are issued. There is no Result Phase. Recalibrates should not be issued on more than one drive at a time. This is because the drives are actually selected via the DOR, which can only select one drive at a time. No other command except the Sense Interrupt command should be issued while a Recalibrate command is in progress.

Command Phase:

0	0	0	0	0	1	1	1
0	0	0	0	0	0	DR1	DR0

Execution Phase: Disk drive head is stepped out to Track 0.

Result Phase: None.

4.1.14 Relative Seek Command

The Relative Seek command steps the selected drive in or out a given number of steps. This command will step the read/write head an incremental number of tracks, as opposed to comparing against the internal present track register for that drive.

Command Phase:

1	DIR	0	0	1	1	1	1
X	X	X	X	X	HD	DR1	DR0

Execution Phase: Disk drive head stepped in or out a programmable number of tracks.

Result Phase: None.

The Relative Seek parameters are defined as follows:

DIR: Read/Write Head Step Direction Control

0 = Step Head Out

1 = Step Head In

RTN: Relative Track Number. This value will determine how many incremental tracks to step the head in or out from the current track number.

The controller will issue RTN number of step pulses and update the Present Track Register for the selected drive. The one exception to this is if the TRK0 disk input goes active, which indicates that the drive read/write head is at the outermost track. In this case, the step pulses for the Relative Seek are terminated, and the PTR value is set according to the actual number of step pulses issued. The arithmetic is done modulo 255. The DRx BUSY bit in the MSR is set for the selected drive. The controller will simulate the Motor On time before issuing the step pulses. After the Motor On time, the controller will enter the Idle Phase. The execution of the actual step pulses occurs in the Idle Phase of the controller.

After the step operation is complete, the controller will generate an interrupt. There is no Result Phase. Relative Seeks should not be issued on more than one drive at a time. This is because the drives are actually selected via the DOR, which can only select one drive at a time. No other command except the Sense Interrupt command should be issued while a Relative Seek command is in progress.

4.1.15 Scan Commands

The Scan commands allow data read from the disk to be compared against data sent from the μP, using ones complement arithmetic, sector by sector.

There are three Scan commands to choose from:

1. Scan Equal: checks to see if the scanned value of the disk data is equal to that of the μP data. The scan condition is therefore: disk data = μP data?
2. Scan Low or Equal: checks to see if the scanned value of the disk data is equal to or less than that of the μP data. The scan condition is therefore: disk data ≤ data?
3. Scan High or Equal: checks to see if the scanned value of the disk data is equal to or greater than that of the μP data. The scan condition is therefore: disk data ≥ μP data?

The results of these comparisons are indicated in the Status Register bits 3 and 2, see Table 4-13, and the structure of the three commands follows.

Each sector is compared starting with the most significant bytes first, and where the next sector is defined as the current Sector Number plus the Sector Step Size. Reading of sectors continues until either the scan condition is met, the End of Track (EOT) has been reached, or the Terminal Count (TC) is asserted.

If the Wildcard mode is enabled in the Mode command, an FFh from either the disk or the μP is used as a don't care byte that will always match equal. Read errors on the disk will have the same error conditions as the Read Data command.

Additionally, if the Skip Flag (SK) bit is set, sectors with deleted data marks will be ignored. If all sectors read are skipped, the command will terminate with bit 3 of the Status Register set (mimicking a Scan Equal Hit).

TABLE 4-13. Scan Command Termination Values

Command	Comparison Condition	Status		Condition Met?	Indicated Result
		D2	D3		
Scan Equal	Disk Data = μP Data?	1	0	Yes	Disk Data = μP Data
		0	1	No	Disk Data ≠ μP Data
Scan Low or Equal	Disk Data ≤ μP Data?	1	0	Yes	Disk Data = μP Data
		0	0	Yes	Disk Data < μP Data
		0	1	No	Disk Data > μP Data
Scan High or Equal	Disk Data ≥ μP Data?	1	0	Yes	Disk Data = μP Data
		0	0	Yes	Disk Data > μP Data
		0	1	No	Disk Data < μP Data

SCAN EQUAL

Command Phase:

MT	MFM	SK	1	0	0	0	1
IPS	X	X	X	X	HD	DR1	DR0
Track Number							
Drive Head Number							
Sector Number							
Bytes per Sector							
End of Track Sector Number							
Intersector Gap Length							
Sector Step Size							

Execution Phase: Data transferred from system to controller is compared to data read from disk.

Result Phase:

MT	MFM	SK	1	1	1	0	1
IPS	X	X	X	X	HD	DR1	DR0
Status Register 0							
Status Register 1							
Status Register 2							
Track Number							
Head Number							
Sector Number							
Bytes per Sector							

SCAN HIGH OR EQUAL

Command Phase:

MT	MFM	SK	1	1	1	0	1
IPS	X	X	X	X	HD	DR1	DR0
Track Number							
Drive Head Number							
Sector Number							
Bytes per Sector							
End of Track Sector Number							
Intersector Gap Length							
Sector Step Size							

Execution Phase: Data transferred from system to controller is compared to data read from disk.

Result Phase:

Status Register 0
Status Register 1
Status Register 2
Track Number
Head Number
Sector Number
Bytes per Sector

SCAN LOW OR EQUAL

Command Phase:

MT	MFM	SK	1	1	0	0	1
IPS	X	X	X	X	HD	DR1	DR0
Track Number							
Drive Head Number							
Sector Number							
Bytes per Sector							
End of Track Sector Number							
Intersector Gap Length							
Sector Step Size							

Execution Phase: Data transferred from system to controller is compared to data read from disk.

Result Phase:

Status Register 0
Status Register 1
Status Register 2
Track Number
Head Number
Sector Number
Bytes per Sector

4.1.16 Seek Command

The Seek command steps the selected drive in or out until the desired track number is reached. During the Execution Phase of the Seek command, the track number to seek to is compared with the present track number. The controller will determine how many step pulses to issue, and the DIR disk interface output will indicate which direction the R/W head should move. The DRx BUSY bit is set in the MSR for the appropriate drive. The controller will wait the Motor On time before issuing the first step pulse.

After the Motor On time, the controller will enter the Idle Phase. The execution of the actual step pulses occurs in the Drive Polling phase of the controller. The step pulse rate is determined by the value programmed in the Specify command. An interrupt will be generated one step pulse period after the last step pulse is issued. A Sense Interrupt command should be issued to determine the cause of the interrupt. There is no Result Phase.

While the internal microengine is capable of performing seek commands on 2 or more drives at the same time, software should ensure that only one drive is seeking at a time. This is because the drives are actually selected via the DOR, which can only select one drive at a time. No other command except a Sense Interrupt command should be issued while a Seek command is in progress.

If the extended track range mode is enabled with the ETR bit in the Mode command, a fourth command byte should be written in the Command Phase to indicate the four most significant bits of the desired track number. Otherwise, only three command bytes should be written.

Command Phase:

0	0	0	0	1	1	1	1
X	X	X	X	X	HD	DR1	DR0
New Track Number							
MSN of Track Number				0	0	0	0

Note: The last Command Phase byte is required only if ETR is set in Mode Command.

Execution Phase: Disk drive head is stepped in or out to a programmed track.

Result Phase: None.

4.1.17 Sense Drive Status Command

The Sense Drive Status command returns the status of the selected disk drive in ST3. This command does not generate an interrupt.

Command Phase:

0	0	0	0	0	1	0	0
X	X	X	X	X	HD	DR1	DR0

Execution Phase: Disk drive status information is detected and reported.

Result Phase:

Status Register 3

4.1.18 Sense Interrupt Command

The Sense Interrupt command is used to determine the cause of an interrupt when the interrupt is a result of the change in status of any disk drive.

Command Phase:

0	0	0	0	1	0	0	0

Execution Phase: Status of interrupt is reported.

Result Phase:

Status Register 0				
Present Track Number (PTR)				
MSN of PTR	0	0	0	0

Note: The third Result Phase byte can only be read if ETR is set in the Mode Command.

Four possible causes for the interrupt are:

1. Entry into the Result Phase of any of the following commands:
   a. Read Data
   b. Read Deleted Data
   c. Read a Track
   d. Read ID
   e. Write Data
   f. Write Deleted Data
   g. Format
   h. Scan
   i. Verify
2. Occurrence of a data transfer in the Execution Phase while in the Non-DMA mode.

3. The Ready Signal changed state during the polling mode for an internally selected drive. (Occurs only after a hardware or software reset.)
4. A Seek, Relative Seek, or Recalibrate command terminates.

An interrupt due to reasons 1 or 2 does not require the Sense Interrupt command and is cleared automatically. This type of interrupt occurs during normal command operations and is easily discernible by the μP via the MSR. It is cleared when reading or writing information from or to the Data Register (FIFO).

An interrupt caused by reasons 3 or 4 is identified with the aid of the Sense Interrupt command. This type of interrupt is cleared after the first result byte has been read. Use bits 5, 6, and 7 of ST0 to identify the cause of the interrupt as shown in Table 4-14.

Issuing a Sense Interrupt command without an interrupt pending is treated as an Invalid command. If the extended track range mode is enabled, a third byte should be read in the Result Phase, which will indicate the four most significant bits of the present track number. Otherwise, only two result bytes should be read.

TABLE 4-14. Status Register 0 Termination Codes

Status Register 0			Cause
Interrupt Code		Seek End	
D7	D6	D5	
1	1	0	Internal Ready Went True
0	0	1	Normal Seek Termination
0	1	1	Abnormal Seek Termination

4.1.19 Set Track Command

This command is used to inspect or change the value of the internal Present Track Register. This can be useful for recovery from disk mistracking errors, where the real current track can be read through the Read ID command, and then the Set Track command can be used to set the internal Present Track Register to the correct value.

If the WNR bit is a 0, a track register is to be read. In this case, the Result Phase byte contains the value in the internal register specified, and the third byte in the Command Phase is a dummy byte.

If the WNR bit is a 1, data is written to a track register. In this case the third byte of the Command Phase is written to the specified internal track register, and the Result Phase byte contains this new value.

The DS1 and DS0 bits select the Present Track Register for the particular drive. The internal register address depends on MSB, DS1, and DS0 as shown in Table 4-15. This command does not generate an interrupt.

TABLE 4-15. Set Track Register Address

DS1	DS0	MSB	Register Addressed
0	0	0	PTR0 (LSB)
0	0	1	PTR0 (MSB)
0	1	0	PTR1 (LSB)
0	1	1	PTR1 (MSB)
1	0	0	PTR2 (LSB)
1	0	1	PTR2 (MSB)
1	1	0	PTR3 (LSB)
1	1	1	PTR3 (MSB)

Command Phase:

0	WNR	1	0	0	0	0	1
0	0	1	1	0	MSB	DR1	DR0
Present Track Number (PTR)							

Execution Phase: Internal register selected by MSB of DR1 or DR0 is read or written.

Result Phase:

Value

4.1.20 Specify Command

The Specify command sets the initial values for three internal timers. The parameters of this command are undefined after power-up, and are unaffected by any reset. Thus, software should always issue a Specify command as part of an initialization routine. This command does not generate an interrupt.

Command Phase:

0	0	0	0	0	0	1	1
Step Rate Time				Motor Off Time			
Motor On Time							DMA

Execution Phase: Internal registers are written.

Result Phase: None.

Step Rate Time: These four bits define the time interval between successive step pulses during a seek, implied seek, recalibrate, or relative seek. The programming of this step rate is shown in Table 4-16.

TABLE 4-16. Step Rate Time (SRT) Values

Data Rate	Value	Range	Units
1 Mbps	(16 − SRT)/2	0.5–8	ms
500 kbps	(16 − SRT)	1–16	ms
300 kbps	(16 − SRT) × 1.67	1.67–26.7	ms
250 kbps	(16 − SRT) × 2	2–32	ms

Motor Off Time: These four bits determine the simulated Motor Off time as shown in Table 4-17.

Motor On Time: These seven bits determine the simulated Motor On time as shown in Table 4-18.

DMA: This bit selects the data transfer mode in the Execution Phase of a read, write, or scan operation.

0 = DMA mode is selected

1 = Non-DMA mode is selected

TABLE 4-17. Motor Off Time (MFT) Values

Data Rate	Mode 1 (TMR = 0)		Mode 2 (TMR = 1)		Units
	Value	Range	Value	Range	
1 Mbps	MFT × 8	8–128	MFT × 512	512–8192	ms
500 kbps	MFT × 16	16–256	MFT × 512	512–8192	ms
300 kbps	MFT × 80/3	26.7–427	MFT × 2560/3	853–13653	ms
250 kbps	MFT × 32	32–512	MFT × 1024	1024–16384	ms

Note: Motor Off Time = 0 is treated as MFT = 16.

TABLE 4-18. Motor On Time (MNT) Values

Data Rate	Mode 1 (TMR = 0)		Mode 2 (TMR = 1)		Units
	Value	Range	Value	Range	
1 Mbps	MNT	1–128	MNT × 32	32–4096	ms
500 kbps	MNT	1–128	MNT × 32	32–4096	ms
300 kbps	MNT × 10/3	3.3–427	MNT × 160/3	53–6827	ms
250 kbps	MNT × 4	4–512	MNT × 64	64–8192	ms

Note: Motor On Time = 0 is treated as MNT = 128.

The Motor Off and Motor On timers are artifacts of the NEC μPD765. These timers determine both the delay from selecting a drive motor until a read or write operation is started, and the delay of deselecting the drive motor after the command is completed. Since the FDC enables the drive and motor select line directly through the DOR, these timers only provide some delay from the initiation of a command until it is actually started.

4.1.21 Verify Command

The Verify command reads logical sectors containing a Normal Data AM from the selected drive without transferring the data to the host. This command is identical to the Read Data command, except that no data is transferred during the Execution Phase.

The Verify command is designed for post-format or post-write verification. Data is read from the disk, as the controller checks for valid Address Marks in the Address and Data Fields. The CRC is computed and checked against the previously stored value on the disk. The EOT value should be set to the final sector to be checked on each side. If EOT is greater than the number of sectors per side, the command will terminate with an error and no useful Address Mark or CRC data will be given.

The TC pin cannot be used to terminate this command since no data is transferred. The verify command can simulate a TC by setting the EC bit to a 1. In this case, the command will terminate when SC (Sector Count) sectors have been read. (If SC = 0 then 256 sectors will be verified.) If EC = 0, then the command will terminate when EOT is equal to the last sector to be checked. In this case, the Data Length parameter should be set to FFh. Refer to Table 4-10 for the Result Phase values for a successful completion of the command. Also see Table 4-19 for further explanation of the result bytes with respect to the MT and EC bits.

Command Phase:

MT	MFM	SK	1	0	1	1	0
EC	X	X	X	X	HD	DR1	DR0
Track Number							
Drive Head Number							
Sector Number							
Bytes per Sector							
End of Track Sector Number							
Intersector Gap Length							
Data Length/Sector Count							

Execution Phase: Data is read from disk but not transferred to the system.

Result Phase:

Status Register 0
Status Register 1
Status Register 2
Track Number
Head Number
Sector Number
Bytes per Sector

TABLE 4-19. Verify Command Result Phase

MT	EC	SC/EOT Value (Notes 1, 2)	Termination Result
0	0	DTL used (should be FFh) EOT ≤ # Sectors per Side	No Errors
0	0	DTL used (should be FFh) EOT > # Sectors per Side	Abnormal Termination
0	1	SC ≤ # Sectors per Side AND SC ≤ EOT	No Errors
0	1	SC > # Sectors Remaining OR SC > EOT	Abnormal Termination
1	0	DTL used (should be FFh) EOT ≤ # Sectors per Side	No Errors
1	0	DTL used (should be FFh) EOT > # Sectors per Side	Abnormal Termination
1	1	SC ≤ # Sectors per Side AND SC ≤ EOT	No Errors
1	1	SC ≤ (EOT × 2) AND EOT ≤ # Sectors per Side	No Errors
1	1	SC > (EOT × 2)	Abnormal Termination

Note 1: # Sectors per Side = number of formatted sectors per each side of the disk.

Note 2: # Sectors Remaining = number of formatted sectors remaining which can be read, which includes side 1 of the disk if the MT bit is set to 1.

Note 3: If MT = 1 and the SC value is greater than the number of remaining formatted sectors on side 0, verifying will continue on side 1 of the disk.

4.1.22 Version Command

The Version command can be used to determine the floppy controller being used. The Result Phase uniquely identifies the floppy controller version. The FDC returns a value of 90h in order to be compatible with the 82077. The DP8473 and other NEC765 compatible controllers will return a value of 80h (invalid command).

Command Phase:

0	0	0	1	0	0	0	0

Execution Phase: None.

Result Phase:

1	0	0	1	0	0	0	0

4.1.23 Write Data Command

The Write Data command receives data from the host and writes logical sectors containing a Normal Data AM to the selected drive. The operation of this command is similar to the Read Data command except that the data is transferred from the μP to the controller instead of the other way around.

The controller will simulate the Motor On time before starting the operation. If implied seeks are enabled, the seek and sense interrupt functions are then performed. The controller then starts the Data Separator and waits for the Data Separator to find the next sector Address Field. The controller compares the Address ID (track, head, sector, bytes per sector) with the desired ID specified in the Command Phase. If there is no match, the controller waits to find the next sector Address Field. This process continues until the desired sector is found. If an error condition occurs, the IC bits in ST0 are set to Abnormal Termination, and the controller enters the Result Phase. Possible errors are:

1. The μP aborted the command by writing to the FIFO. If there is no disk in the drive, the controller will hang up.

   The μP must then take the controller out of this hung state by writing a byte to the FIFO. This will put the controller into the Result Phase.
2. Two index pulses were detected since the search began, and no valid ID has been found. If the track address ID differs, the WT bit or BT bit (if the track address is FFh) will be set in ST2. If the head, sector, or bytes per sector code did not match, the ND bit is set in ST1. If the Address Field AM was never found, the MA bit is set in ST1.
3. The Address Field was found with a CRC error. The CE bit is set in ST1.
4. If the controller detects the Write Protect disk interface input is Asserted. Bit 1 of ST1 is set.

If the correct Address Field is found, the controller waits for all (conventional mode) or part (perpendicular mode) of GAP2 to pass. The controller will then write the preamble field, address marks, and data bytes to the Data Field. The data bytes are transferred to the controller by the μP.

Having finished writing the sector, the controller will continue reading the next logical sector unless one or more of the following termination conditions has occurred:

1. The DMA controller asserted TC. The IC bits in ST0 are set to Normal Termination.
2. The last sector address (of side 1 if MT was set) was equal to EOT. The EOT bit in ST1 is set. The IC bits in ST0 are set to Abnormal Termination. This is the expected condition during Non-DMA transfers.
3. Underrun error. The OR bit in ST1 is set. The IC bits in ST0 are set to Abnormal Termination. If the μP cannot service a transfer request in time, the last correctly written byte will be written to the disk.

If MT was set in the Opcode command byte, and the last sector of side 0 has been transferred, the controller will then continue with side 1.

Command Phase:

MT	MFM	0	0	0	1	0	1
IPS	X	X	X	X	HD	DR1	DR0
Track Number							
Drive Head Number							
Sector Number							
Bytes per Sector							
End of Track Sector Number							
Intersector Gap Length							
Data Length							

Execution Phase: Data is transferred from the system to the controller via DMA or Non-DMA modes and written to the disk.

Result Phase:

Status Register 0
Status Register 1
Status Register 2
Track Number
Head Number
Sector Number
Bytes per Sector

4.1.24 Write Deleted Data

The Write Deleted Data command receives data from the host and writes logical sectors containing a Deleted Data AM to the selected drive. This command is identical to the Write Data command except that a Deleted Data AM is written to the Data Field instead of a Normal Data AM.

Command Phase:

MT	MFM	0	0	1	0	0	1
IPS	X	X	X	X	HD	DR1	DR0
Track Number							
Drive Head Number							
Sector Number							
Bytes per Sector							
End of Track Sector Number							
Intersector Gap Length							
Data Length							

Execution Phase: Data is transferred from the system to the controller via DMA or Non-DMA modes and written to the disk.

Result Phase:

Status Register 0
Status Register 1
Status Register 2
Track Number
Head Number
Sector Number
Bytes per Sector

4.0 FDC Command Set Description (Continued)

4.2 COMMAND SET SUMMARY

CONFIGURE

Command Phase:

0	0	0	1	0	0	1	1
0	0	0	0	0	0	0	0
0	EIS	FIFO	POLL	THRESH			
PRETRK							

Execution Phase: Internal registers written.

Result Phase: None.

DUMPREG

Command Phase:

0	0	0	0	1	1	1	0

Execution Phase: Internal registers read.

Result Phase:

PTR Drive 0							
PTR Drive 1							
PTR Drive 2							
PTR Drive 3							
Step Rate Time				Motor Off Time			
Motor On Time							DMA
Sector per Track/End of Track (Note)							
LOCK	0	DC3	DC2	DC1	DC0	GAP	WG
0	EIS	FIFO	POLL	THRESH			
PRETRK							

Note: Sectors per Track parameter returned if last command issued was Format. End of Track parameter returned if last command issued was Read or Write.

FORMAT TRACK

Command Phase:

0	MFM	0	0	1	1	0	1
X	X	X	X	X	HD	DR1	DR0
Bytes per Sector							
Sectors per Track							
Format Gap							
Data Pattern							

Execution Phase: System transfers four ID bytes (track, head, sector, bytes/sector) per sector to the floppy controller via DMA or Non-DMA modes. The entire track is formatted. The data block in the Data Field of each sector is filled with the data pattern byte.

Result Phase:

Status Register 0
Status Register 1
Status Register 2
Undefined
Undefined
Undefined
Undefined

INVALID

Command Phase:

Invalid Op Codes

Execution Phase: None.

Result Phase:

Status Register 0 (80h)

LOCK

Command Phase:

LOCK	0	0	1	0	1	0	0

Execution Phase: Internal Lock register is written.

Result Phase:

0	0	0	LOCK	0	0	0	0

MODE

Command Phase:

0	0	0	0	0	0	0	1
TMR	IAF	IPS	0	LOW PWR		1	ETR
FWR	FRD	BST	R255	0	0	0	0
DENSEL		BFR	WLD	Head Settle			
0	0	0	0	0	RG	0	PU

Execution Phase: Internal registers are written.

Result Phase: None.

NSC

Command Phase:

0	0	0	1	1	0	0	0

Execution Phase: None.

Result Phase:

0	1	1	1	0	0	1	1

PERPENDICULAR MODE

Command Phase:

0	0	0	1	0	0	1	0
OW	0	DC3	DC2	DC1	DC0	GAP	WG

4.0 FDC Command Set Description (Continued)

Execution Phase: Internal registers are written.

Result Phase: None.

READ DATA

Command Phase:

MT	MFM	SK	0	0	1	1	0
IPS	X	X	X	X	HD	DR1	DR0
Track Number							
Drive Head Number							
Sector Number							
Bytes per Sector							
End of Track Sector Number							
Intersector Gap Length							
Data Length							

Execution Phase: Data read from disk drive is transferred to system via DMA or Non-DMA modes.

Result Phase:

Status Register 0
Status Register 1
Status Register 2
Track Number
Head Number
Sector Number
Bytes per Sector

READ DELETED DATA

Command Phase:

MT	MFM	SK	0	1	1	0	0
IPS	X	X	X	X	HD	DR1	DR0
Track Number							
Drive Head Number							
Sector Number							
Bytes per Sector							
End of Track Sector Number							
Intersector Gap Length							
Data Length							

Execution Phase: Data read from disk drive is transferred to system via DMA or Non-DMA modes.

Result Phase:

Status Register 0
Status Register 1
Status Register 2
Track Number
Head Number
Sector Number
Bytes per Sector

READ ID

Command Phase:

0	MFM	0	0	1	0	1	0
X	X	X	X	X	HD	DR1	DR0

Execution Phase: Controller reads first ID Field header bytes it can find and reports these bytes to the system in the result bytes.

Result Phase:

Status Register 0
Status Register 1
Status Register 2
Track Number
Head Number
Sector Number
Bytes per Sector

READ A TRACK

Command Phase:

0	MFM	0	0	0	0	1	0
IPS	X	X	X	X	HD	DR1	DR0
Track Number							
Drive Head Number							
Sector Number							
Bytes per Sector							
End of Track Sector Number							
Intersector Gap Length							
Data Length							

Execution Phase: Data read from disk drive is transferred to system via DMA or non-DMA modes.

Result Phase:

Status Register 0
Status Register 1
Status Register 2
Track Number
Head Number
Sector Number
Bytes per Sector

RECALIBRATE

Command Phase:

0	0	0	0	0	1	1	1
0	0	0	0	0	0	DR1	DR0

Execution Phase: Disk drive head is stepped out to Track 0.

Result Phase: None.

4.0 FDC Command Set Description (Continued)

RELATIVE SEEK

Command Phase:

1	DIR	0	0	1	1	1	1
X	X	X	X	X	HD	DR1	DR0

Execution Phase: Disk drive head stepped in or out a programmable number of tracks.

Result Phase: None.

SCAN EQUAL

Command Phase:

MT	MFM	SK	1	0	0	0	1
IPS	X	X	X	X	HD	DR1	DR0
Track Number							
Drive Head Number							
Sector Number							
Bytes per Sector							
End of Track Sector Number							
Intersector Gap Length							
Sector Step Size							

Execution Phase: Data transferred from system to controller is compared to data read from disk.

Result Phase:

MT	MFM	SK	1	1	1	0	1
IPS	X	X	X	X	HD	DR1	DR0
Status Register 0							
Status Register 1							
Status Register 2							
Track Number							
Head Number							
Sector Number							
Bytes per Sector							

SCAN HIGH OR EQUAL

Command Phase:

MT	MFM	SK	1	1	1	0	1
IPS	X	X	X	X	HD	DR1	DR0
Track Number							
Drive Head Number							
Sector Number							
Bytes per Sector							
End of Track Sector Number							
Intersector Gap Length							
Sector Step Size							

Execution Phase: Data transferred from system to controller is compared to data read from disk.

Result Phase:

Status Register 0
Status Register 1
Status Register 2
Track Number
Head Number
Sector Number
Bytes per Sector

SCAN LOW OR EQUAL

Command Phase:

MT	MFM	SK	1	1	0	0	1
IPS	X	X	X	X	HD	DR1	DR0
Track Number							
Drive Head Number							
Sector Number							
Bytes per Sector							
End of Track Sector Number							
Intersector Gap Length							
Sector Step Size							

Execution Phase: Data transferred from system to controller is compared to data read from disk.

Result Phase:

Status Register 0
Status Register 1
Status Register 2
Track Number
Head Number
Sector Number
Bytes per Sector

SEEK

Command Phase:

0	0	0	0	1	1	1	1
X	X	X	X	X	HD	DR1	DR0
New Track Number							
MSN of Track Number				0	0	0	0

Note: The last Command Phase byte is required only if ETR is set in Mode Command.

Execution Phase: Disk drive head is stepped in or out to a programmed track.

Result Phase: None.

4.0 FDC Command Set Description (Continued)

SENSE DRIVE STATUS

Command Phase:

0	0	0	0	0	1	0	0
X	X	X	X	X	HD	DR1	DR0

Execution Phase: Disk drive status information is detected and reported.

Result Phase:

Status Register 3

SENSE INTERRUPT

Command Phase:

0	0	0	0	1	0	0	0

Execution Phase: Status of interrupt is reported.

Result Phase:

Status Register 0				
Present Track Number (PTR)				
MSN of PTR	0	0	0	0

Note: The third Result Phase byte can only be read if ETR is set in the Mode Command.

SET TRACK

Command Phase:

0	WNR	1	0	0	0	0	1
0	0	1	1	0	MSB	DR1	DR0
Present Track Number (PTR)							

Execution Phase: Internal register selected by MSB of DR1 or DR0 is read or written.

Result Phase:

Value

SPECIFY

Command Phase:

0	0	0	0	0	0	1	1
Step Rate Time				Motor Off Time			
Motor On Time							DMA

Execution Phase: Internal registers are written.

Result Phase: None.

VERIFY

Command Phase:

MT	MFM	SK	1	0	1	1	0
EC	X	X	X	X	HD	DR1	DR0
Track Number							
Drive Head Number							
Sector Number							
Bytes per Sector							
End of Track Sector Number							
Intersector Gap Length							
Data Length/Sector Count							

Execution Phase: Data is read from disk but not transferred to the system.

Result Phase:

Status Register 0
Status Register 1
Status Register 2
Track Number
Head Number
Sector Number
Bytes per Sector

VERSION

Command Phase:

0	0	0	1	0	0	0	0

Execution Phase: None.

Result Phase:

1	0	0	1	0	0	0	0

4.0 FDC Command Set Description (Continued)

WRITE DATA

Command Phase:

MT	MFM	0	0	0	1	0	1
IPS	X	X	X	X	HD	DR1	DR0
Track Number							
Drive Head Number							
Sector Number							
Bytes per Sector							
End of Track Sector Number							
Intersector Gap Length							
Data Length							

Execution Phase: Data is transferred from the system to the controller via DMA or Non-DMA modes and written to the disk.

Result Phase:

Status Register 0
Status Register 1
Status Register 2
Track Number
Head Number
Sector Number
Bytes per Sector

WRITE DELETED DATA

Command Phase:

MT	MFM	0	0	1	0	0	1
IPS	X	X	X	X	HD	DR1	DR0
Track Number							
Drive Head Number							
Sector Number							
Bytes per Sector							
End of Track Sector Number							
Intersector Gap Length							
Data Length							

Execution Phase: Data is transferred from the system to the controller via DMA or Non-DMA modes and written to the disk.

Result Phase:

Status Register 0
Status Register 1
Status Register 2
Track Number
Head Number
Sector Number
Bytes per Sector

4.0 FDC Command Set Description (Continued)

4.3 MNEMONIC DEFINITIONS FOR FDC COMMANDS

Symbol	Description
BFR	Buffer enable bit used in the Mode command. Enabled open-collector output buffers.
BST	Burst Mode disable control bit used in Mode command. Selects the Non-Burst FIFO mode if the FIFO is enabled.
DC0	Drive Configuration 0–3. Used to set DC1a drive to conventional or perpendicular DC2 mode. Used in Perpendicular Mode DC3 command.
DENSEL	Density Select control bits used in the Mode command.
DIR	Direction control bit used in Relative Seek command to indicate step in or out.
DMA	DMA mode enable bit used in the Specify command.
DR0	Drive Select 0–1 bits used in most commands. Selects the logical drive.
DTL	Data Length parameter used in the Read, Write, Scan and Verify commands.
EC	Enable Count control bit used in the Verify command. When this bit is 1, the DTL parameter becomes SC (Sector Count).
EIS	Enable Implied Seeks. Used in the Configure command.
EOT	End of Track parameter set in the Read, Write, Scan, and Verify commands.
ETR	Extended Track Range used with the Seek command.
FIFO	First-In First-Out buffer. Also a control bit used in the Configure command to enable or disable the FIFO.
FRD	FIFO Read disable control bit used in the Mode command.
FWR	FIFO Write disable control bit used in the Mode command.
GAP	GAP2 control bit used in the Perpendicular Mode command.
HD	Head Select control bit used in most commands. Selects Head 0 or 1 of the disk.
IAF	Index Address Field control bit used in the Mode command. Enables the ISO Format during the Format command.
IPS	Implied Seek enable bit used in the Mode, Read, Write, and Scan commands.
LOCK	Lock enable bit in the Lock command. Used to make certain parameters be unaffected by a software reset.
LOW PWR	Low Power control bits used in the Mode command.
MFM	Modified Frequency Modulation control bit used in the Read, Write, Format, Scan and Verify commands. Selects MFM or FM data encoding.
MFT	Motor Off Time programmed in the Specify command.
MNT	Motor On Time programmed in the Specify command.
MT	Multi-Track enable bit used in the Read, Write, Scan and Verify commands.
OW	Overwrite control bit used in the Perpendicular Mode command.
POLL	Enable Drive Polling bit used in the Configure command.
PRETRK	Precompensation Track Number used in the Configure command.
PTR	Present Track Register. Contains the internal track number for one of the four logical disk drives.
PU	Pump diagnostic enable bit used in the Mode command.
R255	Recalibrate control bit used in Mode command. Sets maximum recalibrate step pulses to 255.
RG	Read Gate diagnostic enable bit used in the Mode command.
RTN	Relative Track Number used in the Relative Seek command.
SC	Sector Count control bit used in the Verify command.
SK	Skip control bit used in read and scan operations.
SRT	Step Rate Time programmed in the Specify command. Determines the time between step pulses for seek and recalibrates.
ST0	Status Register 0–3. Contains status ST1 information about the execution of an ST2 command. Read in the Result Phase of some ST3 commands.
THRESH	FIFO threshold parameter used in the Configure command.
TMR	Timer control bit used in the Mode command. Affects the timers set in the Specify command.
WG	Write Gate control bit used in the Perpendicular Mode command.
WLD	Wildcard bit in the Mode command used to enable or disable the wildcard byte (FF) during Scan commands.

5.0 FDC Functional Description

The PC87303 is software compatible with the DP8473 and 82077 floppy disk controllers. Upon a power on reset, the 16-byte FIFO will be disabled. Also, the disk interface outputs will be configured as active push-pull outputs, which are compatible with both CMOS inputs and open-collector resistor terminated disk drive inputs. The FIFO can be enabled with the Configure command. The FIFO can be very useful at the higher data rates, with systems that have a large amount of DMA bus latency, or with multi-tasking systems such as the EISA or MCA bus structures.

The FDC will support all the DP8473 Mode command features as well as some additional features. Additional features include control over the enabling of the FIFO for reads and writes, a Non-Burst mode for the FIFO, a bit that will configure the disk interface outputs as open-drain outputs, and programmability of the DENSEL output.

5.1 MICROPROCESSOR INTERFACE

The FDC interface to the microprocessor consists of the A9–A3, AEN, $\overline{RD}$, and $\overline{WR}$ lines, which access the chip for reads and writes; the data lines D7–0; the address lines A2–0, which select the appropriate register (see Table 3-1); the IRQ6 signal, and the DMA interface signals DRQ, $\overline{DACK}$, and TC. It is through this microprocessor interface that the floppy controller receives commands, transfers data, and returns status information.

5.2 MODES OF OPERATION

The FDC has three modes of operation: PC-AT mode, PS/2 mode, and Model 30 mode, which are determined by the state of the IDENT pin and MFM pin. IDENT can be tied directly to V_{DD} or GND. The MFM pin must be tied high or low with a 10 kΩ resistor (there is an internal 40 kΩ–50 kΩ resistor on the MFM pin). The state of these pins is interrogated by the controller during a chip reset to determine the mode of operation. See Section 3.0 Register Description for more details on the register set used for each mode of operation. After chip reset, the state of IDENT can be changed to change the polarity of DENSEL (see Section 1.0 Pin Description).

PC-AT Mode—Bits 7, 6 of ASC register are 11 (default): The PC-AT register set is enabled. The DMA enable bit in the Digital Output Register becomes valid (IRQ6 and DRQ can be TRI-STATE). TC and DENSEL become active high signals (defaults to a 5.25″ floppy drive).

PS/2 Mode—Bits 7, 6 of ASC register are 01: This mode supports the PS/2 Models 50/60/80 configuration and register set. The DMA enable bit in the Digital Output Register becomes a don't care (IRQ6 and DRQ signals are always valid). TC and DENSEL become active low signals (default to 3.5″ floppy drive).

Model 30 Mode—Bits 7, 6 of ASC register are 00: This mode supports the PS/2 Model 30 configuration and register set. The DMA enable bit in the Digital Output Register becomes valid (IRQ6 and DRQ can be TRI-STATE). TC is active high and DENSEL becomes active low (default to 3.5″ floppy drive).

5.3 CONTROLLER PHASES

The FDC has three separate phases of a command, the Command Phase, the Execution Phase, and the Result Phase. Each of these controller phases determine how data is transferred between the floppy controller and the host microprocessor. In addition, when no command is in progress, the controller is in the Idle Phase or Drive Polling Phase.

5.3.1 Command Phase

During the Command Phase, the μP writes a series of bytes to the Data Register. The first command byte contains the opcode for the command, and the controller knows how many more bytes to expect based on this opcode byte. The remaining command bytes contain the particular parameters required for the command. The number of command bytes varies for each particular command. All the command bytes must be written in the order specified in the Command Description Table. The Execution Phase starts immediately after the last byte in the Command Phase is written. Prior to performing the Command Phase, the Digital Output Register should be set and the data rate should be set with the Data Rate Select Register or Configuration Control Register.

The Main Status Register controls the flow of command bytes, and must be polled by the software before writing each Command Phase byte to the Data Register. Prior to writing a command byte, the RQM bit (D7) must be set and the DIO bit (D6) must be cleared in the MSR. After the first command byte is written to the Data Register, the CMD PROG bit (D4) is also set and remains set until the last Result Phase byte is read. If there is no Result Phase, the CMD PROG bit will be cleared after the last command byte is written.

A new command may be initiated after reading all the result bytes from the previous command. If the next command requires selecting a different drive or changing the data rate, the DOR and DSR or CCR should be updated. If the command is the last command, the software should deselect the drive.

Note: As a general rule, the operation of the controller core is independent of how the μP updates the DOR, DSR, and CCR. The software must ensure that the manipulation of these registers is coordinated with the controller operation.

5.3.2 Execution Phase

During the Execution Phase, the disk controller performs the desired command. Commands that involve data transfers, (e.g., read, write, or format operation) require the μP to write or read data to or from the Data Register at this time. Some commands such as a Seek or Recalibrate control the read/write head movement on the disk drive during the Execution Phase via the disk interface signals. Execution of other commands does not involve any action by the μP or disk drive, and consists of an internal operation by the controller.

If there is data to be transferred between the μP and the controller during the Execution, there are three methods that can be used, DMA mode, interrupt transfer mode, and software polling mode. The last two modes are called the Non-DMA modes. The DMA mode is used if the system has a DMA controller. This allows the μP to do other tasks while the data transfer takes place during the Execution Phase. If the Non-DMA mode is used, an interrupt is issued for each byte transferred during the Execution Phase. Also, instead of using the interrupt during Non-DMA mode, the Main Status Register can be polled by software to indicate when a byte transfer is required. All of these data transfer modes work with the FIFO enabled or disabled.

5.3.2.1 DMA Mode—FIFO Disabled

The DMA mode is selected by writing a 0 to the DMA bit in the Specify command and by setting the DMA enabled bit (D3) in the DOR. With the FIFO disabled, a DMA request (DRQ) is generated in the Execution Phase when each byte is ready to be transferred. The DMA controller should respond to the DRQ with a DMA acknowledge ($\overline{DACK}$) and a read or write strobe. The DRQ is cleared by the leading edge of the active low $\overline{DACK}$ input signal. After the last byte is transferred, an interrupt is generated, indicating the beginning of the Result Phase. During DMA operations the chip select input ($\overline{CS}$) must be held high. The $\overline{DACK}$ signal acts as the chip select for the FIFO in this case, and the state of the address lines A2–A0 is a don't care. The Terminal Count (TC) signal can be asserted by the DMA controller to terminate the data transfer at any time. Due to internal gating, TC is only recognized when $\overline{DACK}$ is low.

PC-AT Mode. When in the PC-AT interface mode with the FIFO disabled, the controller is in single byte transfer mode. That is, the system has one byte time to service a DMA request (DRQ) from the controller. DRQ will be deasserted between each byte.

PS/2 and Model 30 Modes. When in the PS/2 or Model 30 modes, DMA transfers with the FIFO disabled are performed differently. Instead of a single byte transfer mode, the FIFO is actually enabled with THRESH = 0Fh. Thus, DRQ is asserted when one byte has entered the FIFO during reads, and when one byte can be written to the FIFO during writes. DRQ is deasserted by the leading edge of the $\overline{DACK}$ input, and is reasserted when $\overline{DACK}$ goes inactive high. This operation is very similar to Burst mode transfer with the FIFO enabled except that DRQ is deasserted between each byte.

5.3.2.2 DMA Mode—FIFO Enabled

Read Data Transfers

Whenever the number of bytes in the FIFO is greater than or equal to (16 − THRESH), a DRQ is generated. This is the trigger condition for the FIFO read data transfers from the floppy controller to the μP.

Burst Mode. DRQ remains active until enough bytes have been read from the controller to empty the FIFO.

Non-Burst Mode. DRQ is deasserted after each read transfer. If the FIFO is not completely empty, DRQ is reasserted after a 350 ns delay. This allows other higher priority DMA transfers to take place between floppy transfers. In addition, this mode allows the controller to work correctly in systems where the DMA controller is put into a read verify mode, where only $\overline{DACK}$ signals are sent to the FDC, with no $\overline{RD}$ pulses. This read verify mode of the DMA controller is used in some PC software. The FIFO Non-Burst mode allows the $\overline{DACK}$ input from the DMA controller to be strobed, which correctly clocks data from the FIFO.

For both the Burst and Non-Burst modes, when the last byte in the FIFO has been read, DRQ goes inactive. DRQ is then reasserted when the FIFO trigger condition is satisfied. After the last byte of a sector has been read from the disk, DRQ is again generated even if the FIFO has not yet reached its threshold trigger condition. This guarantees that all the current sector bytes are read from the FIFO before the next sector byte transfer begins.

Write Data Transfers

Whenever the number of bytes in the FIFO is less than or equal to THRESH, a DRQ is generated. This is the trigger condition for the FIFO write data transfers from the μP to the floppy controller.

Burst Mode. DRQ remains active until enough bytes have been written to the controller to completely fill the FIFO.

Non-Burst Mode. DRQ is deasserted after each write transfer. If the FIFO is not full, DRQ is reasserted after a 350 ns delay. This deassertion of DRQ allows other higher priority DMA transfers to take place between floppy transfers.

The FIFO has a byte counter which monitors the number of bytes being transferred to the FIFO during write operations for both Burst and Non-Burst modes. When the last byte of a sector is transferred to the FIFO, DRQ is deasserted even if the FIFO has not been completely filled. Thus, the FIFO is cleared after each sector is written. Only after the floppy controller has determined that another sector is to be written is DRQ asserted again. Also, since DRQ is deasserted immediately after the last byte of a sector is written to the FIFO, the system does not need to tolerate any DRQ deassertion delay and is free to do other work.

Read and Write Data Transfers

The $\overline{DACK}$ input signal from the DMA controller may be held active during an entire burst or it may be strobed for each byte transferred during a read or write operation. When in the Burst mode, the floppy controller deasserts DRQ as soon as it recognizes that the last byte of a burst was transferred. If $\overline{DACK}$ is strobed for each byte, the leading edge of this strobe is used to deassert DRQ. If $\overline{DACK}$ is strobed, $\overline{RD}$ or $\overline{WR}$ are not required. This is the case during the Read-

Verify mode of the DMA controller. If $\overline{DACK}$ is held active during the entire burst, the trailing edge of the $\overline{RD}$ or $\overline{WR}$ strobe is used to deassert DRQ. DRQ is deasserted within 50 ns of the leading edge of $\overline{DACK}$, $\overline{RD}$, or $\overline{WR}$. This quick response should prevent the DMA controller from transferring extra bytes in most applications.

Overrun Errors

An overrun or underrun error terminates the execution of the command if the system does not transfer data within the allotted data transfer time (see Section 3.7), which puts the controller into the Result Phase. During a read overrun, the μP is required to read the remaining bytes of the sector before the controller asserts IRQ6, signifying the end of execution. During a write operation, an underrun error terminates the Execution Phase after the controller has written the remaining bytes of the sector with the last correctly written byte to the FIFO and generated the CRC bytes. Whether there is an error or not, an interrupt is generated at the end of the Execution Phase, and is cleared by reading the first Result Phase byte.

$\overline{DACK}$ asserted alone without a RD or WR strobe is also counted as a transfer. If RD or WR are not being strobed for each byte, $\overline{DACK}$ must be strobed for each byte so that the floppy controller can count the number of bytes correctly. A new command, the Verify command, has been added to allow easier verification of data written to the disk without the need of actually transferring the data on the data bus.

5.3.2.3 Interrupt Mode—FIFO Disabled

If the Interrupt (Non-DMA) mode is selected, IRQ6 is asserted instead of DRQ when each byte is ready to be transferred. The Main Status Register should be read to verify that the interrupt is for a data transfer. The RQM and NON DMA bits (D7 and D5) in the MSR are set. The interrupt is cleared when the byte is transferred to or from the Data Register. $\overline{CS}$ and $\overline{RD}$ or $\overline{CS}$ and $\overline{WR}$ must be used to transfer the data in or out of the Data Register (A2–A0 must be valid). $\overline{CS}$ asserted by itself is not significant. $\overline{CS}$ must be asserted with $\overline{RD}$ or $\overline{WR}$ for a read or write transfer to be recognized.

The μP should transfer the byte within the data transfer service time (see Section 3.7). If the byte is not transferred within the time allotted, an Overrun Error will be indicated in the Result Phase when the command terminates at the end of the current sector.

An interrupt is also be generated after the last byte is transferred. This indicates the beginning of the Result Phase. The RQM and DIO bits (D7 and D6) in the MSR is set, and the non-DMA bit (D5) is cleared. This interrupt is cleared by reading the first Result Phase byte.

5.3.2.4 Interrupt Mode—FIFO Enabled

The Interrupt (Non-DMA) mode with the FIFO enabled is very similar to the Non-DMA mode with the FIFO disabled. In this case, IRQ6 is asserted instead of DRQ under the exact same FIFO threshold trigger conditions. The MSR should be read to verify that the interrupt is for a data transfer. The RQM and NON DMA bits (D7 and D5) in the MSR is set. $\overline{CS}$ and $\overline{RD}$ or $\overline{CS}$ and $\overline{WR}$ must be used to transfer the data in or out of the Data Register (A2–A0 must be valid). $\overline{CS}$ asserted by itself is not significant. $\overline{CS}$ must be asserted with $\overline{RD}$ or $\overline{WR}$ for a read or write transfer to be recognized.

The Burst mode may be used to hold the IRQ6 pin active during a burst, or the Non-Burst mode may be used to toggle the IRQ6 pin for each byte of a burst. The Main Status Register is always valid from the μP point of view. For example, during a read command, after the last byte of data has been read from the disk and placed in the FIFO, the MSR still indicates that the Execution Phase is active, and that data needs to be read from the Data Register. Only after the last byte of data has been read by the μP from the FIFO does the Result Phase begin.

The same overrun and underrun error procedures from the DMA mode apply to the Non-DMA mode. Also, whether there is an error or not, an interrupt is generated at the end of the Execution Phase, and is cleared by reading the first Result Phase byte.

5.3.2.5 Software Polling

If the Non-DMA mode is selected and interrupts are not suitable, the μP can poll the MSR during the Execution Phase to determine when a byte is ready to be transferred. The RQM bit (D7) in the MSR reflects the state of the IRQ6 signal. Otherwise, the data transfer is similar to the Interrupt Mode described above. This is true for the FIFO enabled or disabled.

5.3.3 Result Phase

During the Result Phase, the μP reads a series of bytes from the data register. These bytes indicate the status of the command. This status may indicate whether the command executed properly, or contain some control information (see the Command Description and Status Register Description). These Result Phase bytes are read in the order specified for that particular command. Some commands will not have a result phase. Also, the number of result bytes varies with each command. All of the result bytes must be read from the Data Register before the next command can be issued.

Like the Command Phase, the Main Status Register controls the flow of result bytes, and must be polled by the software before reading each Result Phase byte from the Data Register. The RQM bit (D7) and DIO bit (D6) must both be set before each result byte can be read. After the last result byte is read, the COM PROG bit (D4) in the MSR is cleared, and the controller is ready for the next command.

5.3.4 Idle Phase

After a hardware or software reset, or after the chip has recovered from the power-down mode, the controller enters the Idle Phase. Also, when there are no commands in progress the controller is in the Idle Phase. The controller waits for a command byte to be written to the Data Register. The RQM bit is set and the DIO bit cleared in the MSR. After receiving the first command (opcode) byte, the controller enters the Command Phase. When the command is completed the controller again enters the Idle Phase. The Data Separator remains synchronized to the reference frequency while the controller is idle. While in the Idle Phase, the controller will periodically enters the Drive Polling Phase (see Section 5.3.5).

5.3.5 Drive Polling Phase

The National FDC supports the polling mode of the old generation 8-inch drives as a means of monitoring any change in status for each disk drive present in the system. This mode is supported for the sole purpose of providing backward compatibility with software that expects its presence.

While in the Idle Phase the controller enters a Drive Polling Phase every 1 ms (based on the 500 kbps data rate). While in the Drive Polling Phase, the controller interrogates the Ready Changed status for each of the four logical drives. The internal Ready line for each drive is toggled only after a hardware or software reset, and an interrupt is generated for drive 0. At this point, the software must issue four Sense Interrupt commands to clear the Ready Changed State status for each drive. This requirement can be eliminated if drive polling is disabled via the POLL bit in the Configure command. The Configure command must be issued within 500 μs (worst case) of the hardware or software reset for drive polling to be disabled.

Even if drive polling is disabled, drive stepping and delayed power-down occurs in the Drive Polling Phase. The controller checks the status of each drive and if necessary it issues a step pulse on the STEP output with the DIR signal at the appropriate logic level. Also, the controller uses the Drive Polling Phase to control the Automatic Low Power mode. When the Motor Off time has expired, the controller waits 512 ms based on the 500 kbps and 1 Mbps data rate before powering down if this function is enabled via the Mode command.

If a new command is issued when the FDC is in the middle of a polling routine, the MSR will not indicate a ready status for the next parameter byte until the poling sequence completes the loop. This can cause a delay between the first and second bytes of up to 500 μs at 250 kbps.

5.4 DATA SEPARATOR

The internal data separator consists of an analog PLL and its associated circuitry. The PLL synchronizes the raw data signal read from the disk drive. The synchronized signal is used to separate the encoded clock and data pulses. The data pulses are deserialized into bytes and then sent to the μP by the controller.

The main PLL consists of five main components, a phase comparator, a charge pump, a filter, a voltage controlled oscillator (VCO), and a programmable divider. The phase comparator detects the difference between the phase of the divider's output and the phase of the raw data being read from the disk. This phase difference is converted to a current by the charge pump, which either charges or discharges one of three filters which is selected based on the data rate. The resulting voltage on the filter changes the frequency of the VCO and the divider output to reduce the phase difference between the input data and the divider's output. The PLL is ''locked'' when the frequency of the divider is exactly the same as the average frequency of the data read from the disk. A block diagram of the data separator is shown in *Figure 5-1*.

To ensure optimal performance, the data separator incorporates several additional circuits. The quarter period delay line is used to determine the center of each bit cell, and to disable the phase comparator when the raw data signal is missing a clock or data pulse in the MFM or FM pattern. A secondary PLL is used to automatically calibrate the quarter period delay line. The secondary PLL also calibrates the center frequency of the VCO.

To eliminate the logic associated with controlling multiple data rates, the FDC supports each of the four data rates (250, 300, 500 kbps, and 1 Mbps) with a separate, optimized internal filter. The appropriate filter for each data rate is automatically switched into the data separator circuit when the data rate is selected via the Data Rate Select or Configuration Control Register. These filters have been optimized through lab experimentation, and are designed into the controller to reduce the external component cost associated with the floppy controller.

The FDC has a dynamic window margin and lock range performance capable of handling a wide range of floppy disk drives. Also, the data separator works well under a variety of conditions, including the high motor speed fluctuations of floppy compatible tape drives.

Figure 5-2 shows the floppy disk controller dynamic window margin performance at the four different data rates. Dynamic window margin is the primary indicator of the quality and performance level of the data separator. This measurement indicates how much motor speed variation (MSV) of the drive spindle motor and bit jitter (or window margin) can be tolerated by the data separator.

MSV is shown on the x-axis of the dynamic window margin graph. MSV is translated directly to the actual data rate of the data as it is read from the disk by the data separator. That is, a faster than nominal motor will result in a higher frequency in the actual data rate.

The dynamic window margin performance curves also indicate how much bit jitter (or window margin) can be tolerated by the data separator. This parameter is shown on the y-axis of the graphs. Bit jitter is caused by the magnetic interaction of adjacent data pulses on the disk, which effectively shifts the bits away from their nominal positions in the middle of the bit window. Window margin is commonly measured as a percentage. This percentage indicates how far a data bit can be shifted early or late with respect to its nominal bit position, and still be read correctly by the data separator. If the data separator cannot correctly decode a shifted bit, then the data is misread and a CRC results.

5.0 FDC Functional Description (Continued)

The dynamic window margin performance curves contain two pieces of information: 1) the maximum range of MSV (also called ''lock range'') that the data separator can handle with no read errors, and 2) the maximum percentage of window margin (or bit jitter) that the data separator can handle with no read errors. Thus, the area under the dynamic window margin curves in *Figure 5-2* is the range of MSV and bit jitter that the FDC can handle with no read errors. The FDC internal analog data separator has a much better performance than comparable digital data separator designs, and does not require any external components.

Note: The dynamic window margin curves were generated using a FlexStar FS-540 Floppy Disk Simulator and a proprietary dynamic window margin test program written by National Semiconductor.

The controller takes best advantage of the internal analog data separator by implementing a sophisticated read algorithm. This ID search algorithm, shown in *Figure 5-3*, enhances the PLL's lock characteristics by forcing the PLL to relock to the crystal reference frequency any time the data separator attempts to lock to a non-preamble pattern. This algorithm ensures that the PLL is not thrown way out of lock by write splices or bad data fields.

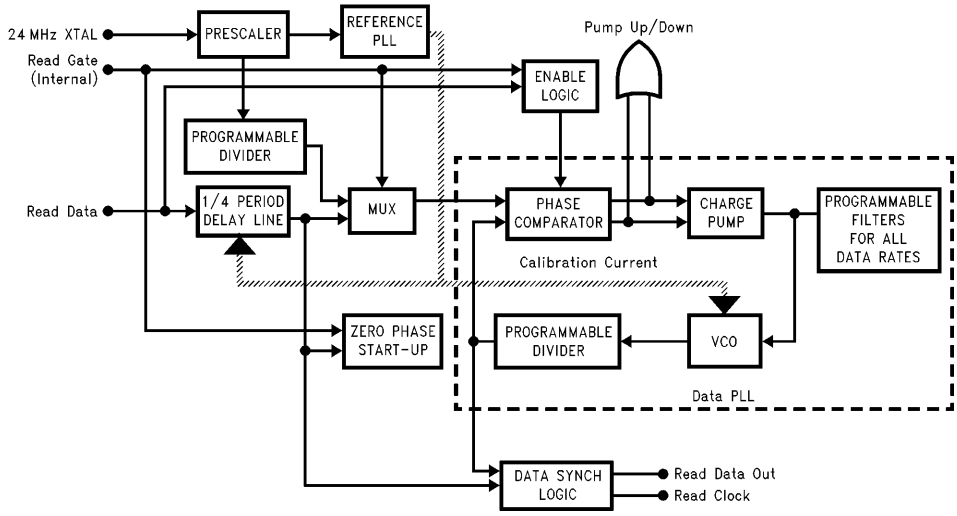

TL/C/12074–20

FIGURE 5-1. FDC Data Separator Block Diagram

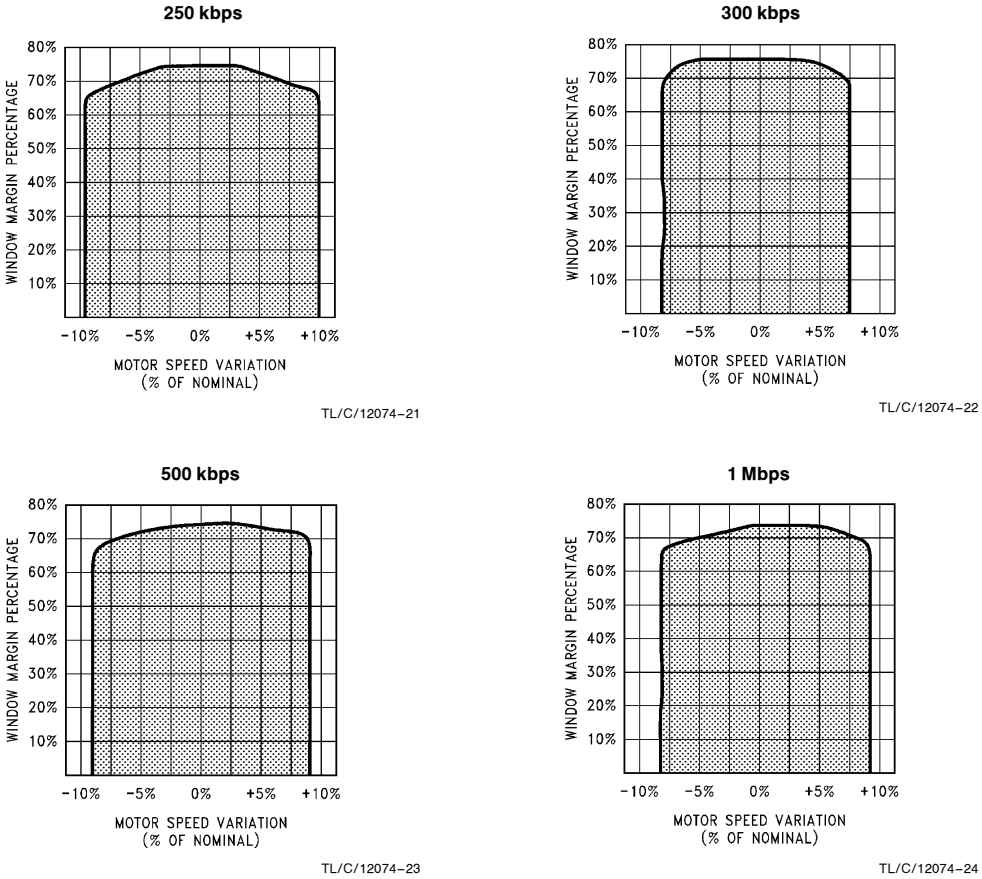

FIGURE 5-2. PC87303 Dynamic Window Margin Performance

(Typical performance at V_{DD} = 5.0V, 25°C)

5.5 CRYSTAL OSCILLATOR

The FDC is clocked by a single 24 MHz signal. An on-chip oscillator is provided to enable the attachment of a crystal or a clock signal.

A parallel resonant crystal is preferred if at all possible. In some cases, a series resonant crystal can be used, but care must be taken to ensure that the crystal does not oscillate at a sub-harmonic frequency. The oscillator is able to work with high profile, low profile, and surface mount type crystal enclosures. External bypass capacitors (5 pF to 10 pF) should be connected from XTAL1 and XTAL2 to GND. If an external oscillator circuit is used, it must have a duty cycle of at least 40%–60%, and minimum input levels of 2.4V and 0.4V. The controller should be configured so that the external oscillator clock is input into the X1/OSC pin, and XTAL2 is left unconnected.

5.6 PERPENDICULAR RECORDING MODE

The FDC is fully compatible with perpendicular recording mode disk drives at all data rates. These perpendicular mode drives are also called 4 Mbyte (unformatted) or 2.88 Mbyte (formatted) drives, which refers to their maximum storage capacity. Perpendicular recording will orient the magnetic flux changes (which represent bits) vertically on the disk surface, allowing for a higher recording density than the conventional longitudinal recording methods. With this increase in recording density comes an increase in the data rate of up to 1 Mbps, thus doubling the storage capacity. In addition, the perpendicular 2.88M drive is read/write compatible with 1.44M and 720k diskettes (500 kbps and 250 kbps respectively).

5.0 FDC Functional Description (Continued)

The 2.88M drive has unique format and write data timing requirements due to its read/write head and pre-erase head design (see *Figure 5-4*). Unlike conventional disk drives which have only a read/write head, the 2.88M drive has both a pre-erase head and read/write head. With conventional disk drives, the read/write head by itself is able to rewrite the disk without problems. For 2.88M drives, a pre-erase head is needed to erase the magnetic flux on the disk surface before the read/write can write to the disk surface. The pre-erase head is activated during disk write operations only, i.e., Format and Write Data commands.

In 2.88M drives, the pre-erase head leads the read/write head by 200 μm, which translates to 38 bytes at 1 Mbps (19 bytes at 500 kbps). For both conventional and perpendicular drives, WGATE is asserted with respect to the position of the read/write head. With conventional drives, this means that WGATE is asserted when the read/write head is located at the beginning of the Data Field preamble. With the 2.88M drives, since the preamble must be pre-erased before it is rewritten, WGATE should be asserted when the pre-erase head is located at the beginning of the Data Field preamble. This means that WGATE should be asserted when the read/write head is at least 38 bytes (at 1 Mbps) before the preamble. See Table 4-5 for a description of the WGATE timing for perpendicular drives at the various data rates.

Because of the 38 byte spacing between the read/write head and the pre-erase head at 1 Mbps, the GAP2 length of 22 bytes used in the standard IBM disk format is not long enough. There is a new format standard for 2.88M drives at 1 Mbps called the Perpendicular Format, which increases the GAP2 length to 41 bytes (see *Figure 4-1*). The Perpendicular Mode command will put the floppy controller into perpendicular recording mode, which allows it to read and write perpendicular media. Once this command is invoked, the read, write and format commands can be executed in the normal manner. The perpendicular mode of the floppy controller will work at all data rates, adjusting the format and write data parameters accordingly. See Section 4.2.6 for more details.

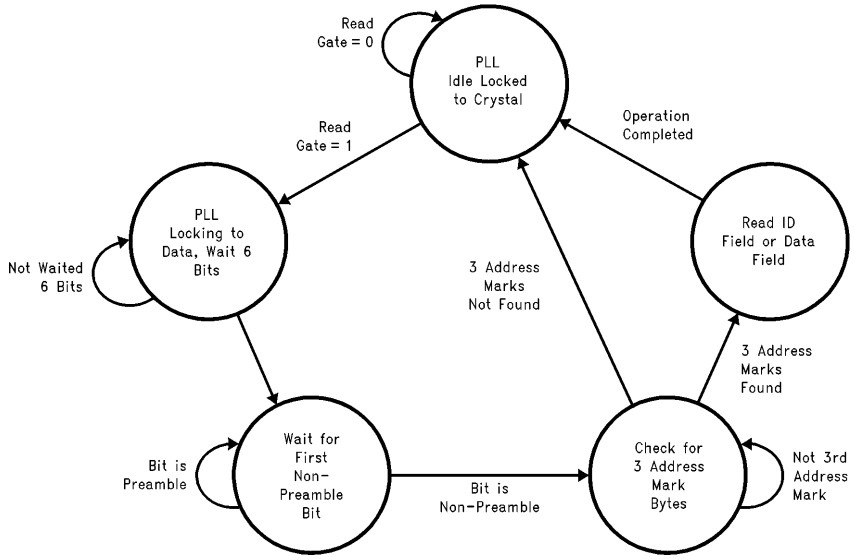

TL/C/12074–25

FIGURE 5-3. Read Data Algorithm—State Diagram

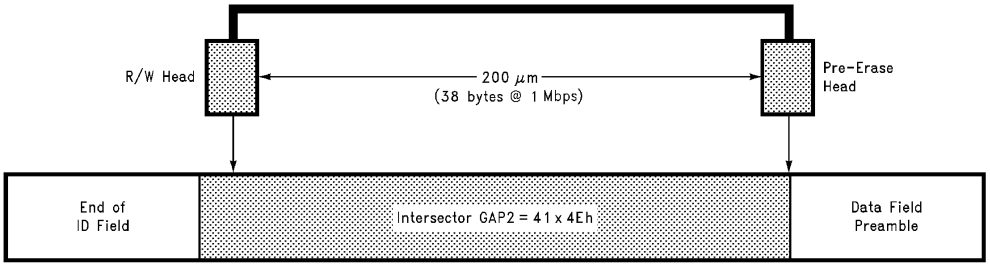

TL/C/12074–26

FIGURE 5-4. Perpendicular Recording Drive R/W Head and Pre-Erase Head

5.0 FDC Functional Description (Continued)

5.7 DATA RATE SELECTION

The data rate can be chosen two different ways with the FDC. For PC compatible software, the Configuration Control Register at address 3F7h is used to program the data rate for the floppy controller. The lower bits D1 and D0 are used in the CCR to set the data rate. The other bits should be set to zero. See Table 3-7 for the data rate select encoding.

The data rate can also be set using the Data Rate Select Register at address 4. Again, the lower two bits of the register are used to set the data rate. The encoding of these bits is exactly the same as those in the CCR. The remainder of the bits in the DSR are used for other functions. Consult the Register Description (Section 3.1.6) for more details.

The data rate is determined by the last value that is written to either the CCR or the DSR. In other words, either the CCR or the DSR can override the data rate selection of the other register. When the data rate is selected, the microengine and data separator clocks are scaled appropriately. Also, the DRATE0 and DRATE1 output pins will reflect the state of the data select bits that were last written to either the CCR or the DSR.

5.8 WRITE PRECOMPENSATION

Write precompensation is a way of preconditioning the WDATA output signal to adjust for the effects of bit shift on the data as it is written to the disk surface. Bit shift is caused by the magnetic interaction of data bits as they are written to the disk surface, and has the effect of shifting these data bits away from their nominal position in the serial MFM or FM data pattern. Data that is subject to bit shift is much harder to read by a data separator, and can cause soft read errors. Write precompensation predicts where bit shift could occur within a data pattern. It then shifts the individual data bits early, late, or not at all such that when they are written to the disk, the resultant shifted data bits will be back in their nominal position.

The FDC supports software programmable write precompensation. Upon power up, the default write precomp values will be used (see Table 3-6). The programmer can choose a different value of write precomp with the DSR register if desired (see Table 3-5). Also on power up, the default starting track number for write precomp is track zero. This starting track number for write precomp can be changed with the Configure command.

5.9 FDC LOW POWER MODE LOGIC

The FDC section of the PC87303 supports two low power modes described here in detail. Other low power modes of the PC87303 are described in Section 2.5. Details concerning entering and exiting low power mode via setting Date Rate Select Register bit 6 or by executing the FDC Mode Command are covered below and in Section 3.1.6 and Section 4.1.6. The microcode is driven from the clock, so it will be disabled while the clock is off. The FDC clock is always disabled upon entering this mode, however, the oscillator is only disabled when PTR1 = 1. Upon entering the power-down state, the RQM (Request For Master) bit in the MSR will be cleared.

There are two modes of low power in the floppy controller: manual low power and automatic low power. Manual low power is enabled by writing a 1 to bit 6 of the DSR. The chip will go into low power immediately. This bit will be cleared to 0 after the chip is brought out of low power. Manual low power can also be accessed via the Mode command. The function of the manual low power mode is a logical OR function between the DSR low power bit and the Mode command manual low power bit setting.

Automatic low power mode will switch the controller into low power 500 ms (at the 500 kbps MFM data rate) after it has entered the idle state. Once the auto low power mode is set, it does not have to be set again, and the controller will automatically go into low power mode after it has entered the idle state. Automatic low power mode can only be set with the Mode command.

There are two ways the FDC section can recover from the power-down state. 1) The part will power up after a software reset via the DOR or DSR. Since a software reset requires reinitialization of the controller, this method can be undesirable. 2) The part will also power up after a read or write to either the Data Register or Main Status Register. This is the preferred method of power up since all internal register values are retained. It may take a few milliseconds for the oscillator to stabilize, and the μP will be prevented from issuing commands during this time through the normal Main Status Register protocol. That is, the RQM bit in the MSR will be a 0 until the oscillator has stabilized. When the controller has completely stabilized from power up, the RQM bit in the MSR is set to 1 and the controller can continue where it left off.

The Data Rate Select, Digital Output, and Configuration Control Registers are unaffected by the power-down mode. They will remain active. It is up to the user to ensure that the Motor and Drive Select signals are turned off.

Note: If the power to an external oscillator driving the PC87303 is to be independently removed during the FDC low power mode, it must not be done until 2 ms after the FDC low power command is issued.

5.10 RESET OPERATION

The floppy controller can be reset by hardware or software. Hardware reset is enacted by pulsing the Master Reset input pin. A hardware reset will set all of the user addressable registers and internal registers to their default values. The Specify command values will be don't cares, so they must be reinitialized. The major default conditions are: FIFO disabled, FIFO threshold = 0, Implied Seeks disabled, and Drive Polling enabled.

A software reset can be performed through the Digital Output Register or Data Rate Select Register. The DSR reset bit is self-clearing, while the DOR reset bit is not self-clearing. If the LOCK bit in the Lock command was set to a 1 previous to the software reset, the FIFO, THRESH, and PRETRK parameters in the Configure command will be retained. In addition, the FWR, FRD, and BST parameters in the Mode command will be retained if LOCK is set to 1. This function eliminates the need for total reinitialization of the controller after a software reset.

5.0 FDC Functional Description
(Continued)

After a hardware (assuming the FDC is enabled in the FER) or software reset, the Main Status Register is immediately available for read access by the μP. It will return a 00h value until all the internal registers have been updated and the data separator is stabilized. When the controller is ready to receive a command byte, the MSR will return a value of 80h (Request for Master bit is set). The MSR is guaranteed to return the 80h value within 2.5 μs after a hardware or software reset. All other user addressable registers other than the Main Status Register and Data Register (FIFO) can be accessed at any time, even while the part is in reset.

6.0 Serial Ports

Each of these serial ports functions as a serial data input/output interface in a microcomputer system. The system software determines the functional configuration of the UARTs via a 8-bit bidirectional data bus.

The UARTs are completely independent. They perform serial-to-parallel conversion on data characters received from a peripheral device or a MODEM, and parallel-to-serial conversion on data characters received from the CPU. The CPU can read the complete status of either UART at any time during the functional operation. Status information reported includes the type and condition of the transfer operations being performed by the UART, as well as any error conditions (parity, overrun, framing, or break interrupt).

The UARTs have programmable baud rate generators that are capable of dividing the internal reference clock by divisors of 1 to ($2^{16}-1$), and producing a 16x clock for driving the transmitter logic. Provisions are also included to use this 16x clock to drive the receiver logic. The UARTs have complete MODEM-control capability and a prioritized interrupt system. Interrupts can be programmed to the user's requirements, minimizing the computing required to handle the communications link.

6.1 SERIAL PORT REGISTERS

Two identical register sets, one for each channel, are in the PC87303. All register descriptions in this section apply to the register sets in both channels. See Table 6-1.

TABLE 6-1. PC87303 UART Register Addresses (AEN = 0)

DLAB1	A2	A1	A0	Selected Register
0	0	0	0	Receiver Buffer (Read), Transmitter Holding (Write)
0	0	0	1	Interrupt Enable
0	0	1	0	Interrupt Identification (Read) FIFO Control (Write)
X	0	1	1	Line Control
X	1	0	0	MODEM Control
X	1	0	1	Line Status
X	1	1	0	MODEM Status
X	1	1	1	Scratch
1	0	0	0	Divisor Latch (Least Significant Byte)
1	0	0	1	Divisor Latch (Most Significant Byte)

6.2 LINE CONTROL REGISTER (LCR) Read/Write

The system programmer uses the Line Control Register (LCR) to specify the format of the asynchronous data communications exchange and set the Divisor Latch Access bit. This is a read and write register. Table 6-2 shows the contents of the LCR. Details on each bit follow.

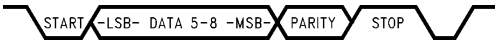

TL/C/12074–27

FIGURE 6-1. PC87303 Composite Serial Data

Bits 0,1 These two bits specify the number of data bits in each transmitted or received serial character. The encoding of bits 0 and 1 is as follows:

Bit 1	Bit 0	Data Length
0	0	5 Bits
0	1	6 Bits
1	0	7 Bits
1	1	8 Bits

6.0 Serial Ports (Continued)

Bit 2 This bit specifies the number of Stop bits transmitted with each serial character. If it is 0, one Stop bit is generated in the transmitted data. If it is 1, when a 5-bit data length is selected, one and a half Stop bits are generated. If it is logic 1, when either a 6-, 7-, or 8-bit word length is selected, two Stop bits are generated. The receiver checks the first Stop bit only, regardless of the number of Stop bits selected.

Bit 3 This bit is the Parity Enable bit. When it is 1, a Parity bit is generated (transmit data) or checked (receive data) between the last data bit and Stop bit of the serial data. (The Parity bit is used to produce an even or odd number of 1s when the data bits and the Parity bit are summed.)

Bit 4 This bit is the Even Parity Select bit. When parity is enabled and bit 4 is 0, an odd number of logic 1s is transmitted or checked in the data word bits and Parity bit. When parity is enabled and bit 4 is 1, an even number of logic 1s is transmitted or checked.

Bit 5 This bit is the Stick Parity bit. When parity is enabled it is used in conjunction with bit 4 to select Mark or Space Parity. When LCR bits 3, 4 and 5 are 1 the Parity bit is transmitted and checked as a 0 (Space Parity). If bits 3 and 5 are 1 and bit 4 is a 0, then the Parity bit is transmitted and checked as 1 (Mark Parity). If bit 5 is 0 Stick Parity is disabled.

Bit 6 This bit is the Break Control bit. It causes a break condition to be transmitted to the receiving UART. When it is set to 1, the serial output (SOUT) is forced to the Spacing state (0). The break is disabled by setting bit 6 to 0. The Break Control bit acts only on SOUT and has no effect on the transmitter logic.

Note that this feature enables the CPU to alert a terminal. If the following sequence is used, no erroneous characters will be transmitted because of the break.

1. Wait for the transmitter to be idle, (TEMT = 1).
2. Set break for the appropriate amount of time. If the transmitter will be used to time the break duration, then check that TEMT = 1 before clearing the Break Control bit.
3. Clear break when normal transmission has to be restored.

During the break, the Transmitter can be used as a character timer to accurately establish the break duration by sending characters and monitoring THRE and TEMT.

Bit 7 This bit is the Divisor Latch Access Bit (DLAB). It must be set high (logic 1) to access the Divisor Latches of the Baud rate Generator during a Read or Write operation or to have the Baud Out (BOUT) signal appear on the BOUT pin. It must be set low (logic 0) to access any other register.

6.0 Serial Ports (Continued)

TABLE 6-2. PC87303 Register Summary for an Individual UART Channel

	Register Address											
	A0−2 = 0 DLAB = 0	**A0−2 = 0 DLAB = 0**	**A0−2 = 1 DLAB = 0**	**2**	**2**	**3**	**4**	**5**	**6**	**7**	**A0−2 = 0 DLAB = 1**	**A0−2 = 1 DLAB = 1**
Bit No.	**Receiver Buffer Register (Read Only)**	**Transmitter Holding Register (Write Only)**	**Interrupt Enable Register**	**Interrupt Ident. Register (Read Only)**	**FIFO Control Register (Write Only)**	**Line Control Register**	**MODEM Control Register**	**Line Status Register**	**MODEM Status Register**	**Scratch Pad Register**	**Divisor Latch (LSB)**	**Divisor Latch (MSB)**
	RBR	**THR**	**IER**	**IIR**	**FCR**	**LCR**	**MCR**	**LSR**	**MSR**	**SCR**	**DLL**	**DLM**
0	Data Bit 0 (Note 1)	Data Bit 0	Enable Received Data Available Interrupt	‘‘0’’ if Interrupt Pending	FIFO Enable	Word Length Select Bit 0	Data Terminal Ready (DTR)	Data Ready (DR)	Delta Clear to Send	Bit 0	Bit 0	Bit 8
1	Data Bit 1	Data Bit 1	Enable Transmitter Holding Register Empty Interrupt	Interrupt ID Bit	RCVR FIFO Reset	Word Length Select Bit 1	Request to Send (RTS)	Overrun Error (OE)	Delta Data Set Ready	Bit 1	Bit 1	Bit 9
2	Data Bit 2	Data Bit 2	Enable Receiver Line Status Interrupt	Interrupt ID Bit	XMIT FIFO Reset	Number of Stop Bits	Out 1 Bit (Note 3)	Parity Error (PE)	Trailing Edge Ring Indicator	Bit 2	Bit 2	Bit 10
3	Data Bit 3	Data Bit 3	Enable MODEM Status Interrupt	Interrupt ID Bit (Note 2)	Reserved	Parity Enable	IRQ Enable	Framing Error (FE)	Delta Data Carrier Detect	Bit 3	Bit 3	Bit 11
4	Data Bit 4	Data Bit 4	0	0	Reserved	Even Parity Select	Loop	Break Interrupt (BI)	Clear to Send	Bit 4	Bit 4	Bit 12
5	Data Bit 5	Data Bit 5	0	0	Reserved	Stick Parity	0	Transmitter Holding Register (THRE)	Data Set Ready	Bit 5	Bit 5	Bit 13
6	Data Bit 6	Data Bit 6	0	FIFOs Enabled (Note 2)	RCVR Trigger (LSB)	Set Break	0	Transmitter Empty (TEMT)	Ring Indicator	Bit 6	Bit 6	Bit 14
7	Data Bit 7	Data Bit 7	0	FIFOs Enabled (Note 2)	RCVR Trigger (MSB)	Divisor Latch Access Bit (DLAB)	0	Error in RCVR FIFO (Note 2)	Data Carrier Detect	Bit 7	Bit 7	Bit 15

Note 1: Bit 0 is the least significant bit. It is the first bit serially transmitted or received.

Note 2: These bits are always 0 in the NS16450 Mode.

Note 3: This bit no longer has a pin associated with it.

TABLE 6-3. PC87303 UART Reset Configuration

Register or Signal	Reset Control	Reset State
Interrupt Enable	Master Reset (MR)	**0000** 0000 (Note 1)
Interrupt Identification	Master Reset	00**00** 0001
FIFO Control	Master Reset	00**00** 0000
Line Control	Master Reset	0000 0000
MODEM Control	Master Reset	**000**0 0000
Line Status	Master Reset	0110 0000
MODEM Status	Master Reset	XXXX 0000 (Note 2)
SOUT	Master Reset	High
INTR (RCVR Errs)	Read LSR/MR	Low/TRI-STATE
INTR (RCVR Data Ready)	Read RBR/MR	Low/TRI-STATE
INTR (THRE)	Read IIR/Write THR/MR	Low/Low/TRI-STATE
INTR (Modem Status Changes)	Read MSR/MR	Low/TRI-STATE
Interrupt Enable Bit	Master Reset	Low
$\overline{RTS}$	Master Reset	High
$\overline{DTR}$	Master Reset	High
RCVR FIFO	MR or (FCR1 = 1 and FCR0 = 1) or Change in FCR0	All Bits Low
XMIT FIFO	MR or (FCR2 = 1 and FCR0 = 1) or Change in FCR0	All Bits Low

Note 1: Boldface bits are permanently low.

Note 2: Bits 7–4 are driven by the input signals.

6.3 PROGRAMMABLE BAUD RATE GENERATOR

The PC87303 contains two independently programmable Baud rate Generators. The 24 MHz crystal oscillator frequency input is divided by 13, resulting in a frequency of 1.8462 MHz. This is sent to each Baud rate Generator and divided by the divisor of the associated UART. The output frequency of the Baud rate Generator (BOUT1,2) is 16× the baud rate.

divisor # = (frequency input) (baud rate × 16)

The output of each Baud rate Generator drives the transmitter and receiver sections of the associated serial channel. Two 8-bit latches per channel store the divisor in a 16-bit binary format. These Divisor Latches must be loaded during initialization to ensure proper operation of the Baud rate Generator. Upon loading either of the Divisor Latches, a 16-bit Baud Counter is loaded. Table 6-4 provides decimal divisors to use with crystal frequencies of 24 MHz. The oscillator input to the chip should always be 24 MHz to ensure that the Floppy Disk Controller timing is accurate and that the UART divisors are compatible with existing software. Using a divisor of zero is not recommended.

TABLE 6-4. PC87303 UART Divisors, Baud Rates and Clock Frequencies

24 MHz Input Divided to 1.8462 MHz		
Baud Rate	**Decimal Divisor for 16x Clock**	**Percent Error (Note)**
50	2304	0.1
75	1536	
110	1047	
134.5	857	0.4
150	768	
300	384	
600	192	
1200	96	
1800	64	
2000	58	0.5
2400	48	
3600	32	
4800	24	
7200	16	
9600	12	
19200	6	
38400	3	
57600	2	
115200	1	

Note: The percent error for all baud rates, except where indicated otherwise is 0.2%.

6.4 LINE STATUS REGISTER (LSR)

This 8-bit register provides status information to the CPU concerning the data transfer. Table 6-2 shows the contents of the Line Status Register. Details on each bit follow:

Bit 0 This bit is the receiver Data Ready (DR) indicator. It is set to 1 whenever a complete incoming character has been received and transferred into the Receiver Buffer Register or the FIFO. It is reset to 0 by reading the data in the Receiver Buffer Register or the FIFO.

Bit 1 This bit is the Overrun Error (OE) indicator. It indicates that data in the Receiver Buffer Register was not read by the CPU before the next character was transferred into the Receiver Buffer Register, thereby destroying the previous character. The OE indicator is set to 1 upon detection of an overrun condition, and reset whenever the CPU reads the contents of the Line Status Register. If the FIFO mode data continues to fill the FIFO beyond the trigger level, an Overrun error will occur only after the FIFO is completely full and the next character has been received in the shift register. OE is indicated to the CPU as soon as it happens. The character in the shift register is overwritten, but is not transferred to the FIFO.

Bit 2 This bit is the Parity Error (PE) indicator. It indicates that the received data character does not have the correct parity, as selected by the even-parity select bit. The PE bit is set to 1 upon detection of a parity error and is reset to 0 whenever the CPU reads the contents of the Line Status Register. In the FIFO mode this error is associated with the particular character in the FIFO that it applies to. This error is revealed to the CPU when its associated character is at the top of the FIFO.

Bit 3 This bit is the Framing Error (FE) indicator. It indicates that the received character did not have a valid Stop bit. It is set to 1 whenever the Stop bit following the last data bit or parity bit is a 0 (Spacing level). The FE indicator is reset whenever the CPU reads the contents of the Line Status Register. In the FIFO mode this error is associated with the particular character in the FIFO that it applies to. This error is revealed to the CPU when its associated character is at the top of the FIFO. The UART will try to resynchronize after a framing error by assuming that the error was due to the next start bit. It samples this ''start'' bit twice and then takes in the bits following it as the rest of the frame.

Bit 4 This bit is the Break Interrupt (BI) indicator. It is set to 1 whenever the received data input is held in the Spacing (0) state for longer than a full word transmission time (i.e., the total time of Start bit + data bits + Parity + Stop bits). The BI indicator is reset whenever the CPU reads the contents of the Line Status Register. In the FIFO mode this error is associated with the particular character in the FIFO that it applies to. This error is revealed to the CPU when its associated character is at the top of the FIFO. When break occurs only one character is loaded into the FIFO. To Restart after a break is received, the SIN pin must be 1 for at least ½ bit time.

Note: Bits 1 through 4 are the error conditions that produce a Receiver Line Status interrupt whenever any of the corresponding conditions are detected and the interrupt is enabled.

Bit 5 This bit is the Transmitter Holding Register Empty (THRE) indicator. It indicates that the UART is ready to accept a new character for transmission. In addition, it causes the UART to issue an interrupt to the CPU when the Transmit Holding Register Empty Interrupt enable is set high. The THRE bit is set to 1 when a character is transferred from the Transmitter Holding Register into the Transmitter Shift Register. The bit is reset to 0 whenever the CPU loads the Transmitter Holding Register. In the FIFO mode it is set when the XMIT FIFO is empty; it is cleared when at least 1 byte is written to the XMIT FIFO.

Bit 6 This bit is the Transmitter Empty (TEMT) indicator. It is set to 1 whenever the Transmitter Holding Register (THR) and the Transmitter Shift Register (TSR) are both empty. It is reset to 0 if either the THR or TSR contains a data character. In the FIFO mode this bit is set to 1 whenever the transmitter FIFO and the shift register are both empty.

Bit 7 In the NS16450 Mode this is 0. In the FIFO Mode this bit is set when there is at least one parity error, framing error or break indication in the FIFO. It is cleared when the CPU reads the LSR, if there are no subsequent errors in the FIFO.

Note: The Line Status Register is intended for read operations only. Writing to this register is not recommended as this operation is only used for factory testing. In the FIFO mode the software must load a data byte in the Rx FIFO via the Loopback Mode in order to write to LSR2–LSR4. LSR0 and LSR7 can't be written to in FIFO Mode.

6.0 Serial Ports (Continued)

6.5 FIFO CONTROL REGISTER (FCR)

This is a write-only register at the same location as the IIR (the IIR is a read-only register). This register is used to enable the FIFOs, clear the FIFOs and to set the RCVR FIFO trigger level.

Bit 0 Writing a 1 to FCR0 enables both the XMIT and RCVR FIFOs. Resetting FCR0 clears all bytes in both FIFOs. When changing from FIFO Mode to NS16450 Mode and vice versa, data is automatically cleared from the FIFOs. This bit must already be 1 when other FCR bits are written to or they will not be programmed.

Bit 1 Writing 1 to FCR1 clears all bytes in the RCVR FIFO and resets its counter logic to 0. The shift register is not cleared. The 1 that is written to this bit position is self-clearing.

Bit 2 Writing 1 to FCR2 clears all bytes in the XMIT FIFO and resets its counter logic to 0. The shift register is not cleared. The 1 that is written to this bit position is self-clearing.

Bit 3 Writing to FCR3 does not change UART operations.

Bits 4, 5 FCR4 to FCR5 are reserved for future use.

Bits 6, 7 The combination of FCR6 and FCR7 are used to designate the interrupt trigger level. See *Figure 6-2*. When the number of bytes in the RCVR FIFO equals the designated interrupt trigger level, a Received Data Available Interrupt is activated. This interrupt must be enabled by setting the Interrupt Enable Register (IER) bit 0.

FCR Bits		RCVR FIFO Trigger Level (Bytes)
7	6	
0	0	01
0	1	04
1	0	08
1	1	14

FIGURE 6-2. Receiver FIFO Trigger Level

6.6 INTERRUPT IDENTIFICATION REGISTER (IIR)

In order to provide minimum software overhead during data character transfers, the UART prioritizes interrupts into four levels and records these in the Interrupt Identification Register. The four levels of interrupt conditions in order of priority are Receiver Line Status; Received Data Ready; Transmitter Holding Register Empty; and MODEM Status.

When the CPU accesses the IIR, the UART freezes all interrupts and indicates the highest priority pending interrupt to the CPU. While this CPU access is occurring, the UART records new interrupts, but does not change its current indication until the current access is complete. Table 6-2 shows the contents of the IIR. Details on each bit follow.

Bit 0 This bit can be used in an interrupt environment to indicate whether an interrupt condition is pending. When it is 0, an interrupt is pending and the IIR contents may be used as a pointer to the appropriate interrupt service routine. When it is 1, no interrupt is pending. See Table 6-5.

Bits 1, 2 These two bits of the IIR are used to identify the highest priority interrupt pending as indicated in Table 6-5.

Bit 3 In the 16450 mode this bit is 0. In the FIFO mode it is set along with bit 2 when a time-out interrupt is pending. See Table 6-5.

Bits 4, 5 These bits of the IIR are always 0.

Bits 6, 7 These two bits are set when FCR0 = 1. (FIFO Mode enabled.)

6.7 INTERRUPT ENABLE REGISTER (IER)

This register enables the five types of UART interrupts. Each interrupt can individually activate the appropriate interrupt (IRQ3 or IRQ4) output signal. It is possible to totally disable the interrupt system by resetting bits 0 through 3 of the Interrupt Enable Register (IER). Similarly, setting bits of this register to 1, enables the selected interrupt(s). Disabling an interrupt prevents it from being indicated as active in the IIR and from activating the interrupt output signal. All other system functions operate in their normal manner, including the setting of the Line Status and MODEM Status Registers. Table 6-2 shows the contents of the IER. Details on each bit follow. See MODEM Control Register bit 3 for more information on enabling the interrupt pin.

Bit 0 When set to 1 this bit enables the Received Data Available Interrupt and Timeout Interrupt in the FIFO Mode.

Bit 1 This bit enables the Transmitter Holding Register Empty Interrupt when set to 1.

Bit 2 This bit enables the Receiver Line Status Interrupt when set to logic 1.

Bit 3 This bit enables the MODEM Status Interrupt when set to logic 1.

Bits 4–7 These four bits are always logic 0.

6.8 MODEM CONTROL REGISTER (MCR)

This register controls the interface with the MODEM or data set (or a peripheral device emulating a MODEM). The contents of the MODEM Control Register (MCR) are indicated in Table 6-2 and are described as follows:

Bit 0 This bit controls the Data Terminal Ready ($\overline{DTR}$) output. When it is set to 1, the $\overline{DTR}$ output is forced to a logic 0. When it is reset to 0, the $\overline{DTR}$ output is forced to 1. In Local Loopback Mode, this bit controls bit 5 of the MODEM Status Register.

Note: The $\overline{DTR}$ and $\overline{RTS}$ output of the UART may be applied to an EIA inverting line driver (such as the DS1488) to obtain the proper polarity input at the MODEM or data set.

Bit 1 This bit controls the Request to Send ($\overline{RTS}$) output. Its effect on the $\overline{RTS}$ output is identical to that described above for bit 0. In Local Loopback Mode, this bit controls bit 4 of the MODEM Status Register.

Bit 2 This bit is the OUT1 bit. It does not have an output pin associated with it. It can be written to and read by the CPU. In Local Loopback Mode, this bit controls bit 6 of the MODEM Status Register.

6.0 Serial Ports (Continued)

Bit 3 This bit enables the interrupt when set. No external pin is associated with this bit other than IRQ3, 4. In Local Loopback Mode, this bit controls bit 7 of the MODEM Status Register.

Bit 4 This bit provides a Local loopback feature for diagnostic testing of the UART. When it is set to 1, the following changes take place: the transmitter Serial Output (SOUT) is set to the Marking (1) state; the receiver Serial Input (SIN) is disconnected; the output of the Transmitter Shift Register is ''looped back'' (connected) to the Receiver Shift Register; the four MODEM Control inputs ($\overline{DSR}$, $\overline{CTS}$, RI and $\overline{DCD}$) are disconnected; and the DTR, RTS, OUT1, IRQ ENABLE bits in MCR are internally connected to DSR, CTS, RI and DCD in MSR, respectively. The MODEM Control output pins are forced to their high (inactive) states. In the Loopback Mode, data that is transmitted is immediately received. This feature allows the processor to verify the transmit-and-received-data paths of the serial port.

In the Loopback Mode, the receiver and transmitter interrupts are fully operational. The MODEM Status Interrupts are also operational, but the interrupts' sources are the lower four bits of MCR instead of the four MODEM control inputs. Writing a 1 to any of these 4 MCR bits will cause an interrupt. In Loopback Mode the interrupts are still controlled by the Interrupt Enable Register. The IRQ3 and IRQ4 pins will be at TRI-STATE in the Loopback Mode.

Bits 5–7 These bits are permanently set to 0.

TABLE 6-5. PC87303 Interrupt Control Functions

Interrupt Identification Register				Interrupt Set and Reset Functions			
Bit 3 (FIFO Mode Only)	**Bit 2**	**Bit 1**	**Bit 0**	**Priority Level**	**Interrupt Type**	**Interrupt Source**	**Interrupt Reset Control**
0	0	0	1	—	None	None	—
0	1	1	0	Highest	Receiver Line Status	Overrun Error, Parity Error, Framing Error or Break Interrupt	Reading the Line Status Register
0	1	0	0	Second	Received Data Available	Receiver Data Available	Read Receiver Buffer
1	1	0	0	Second (FIFO Mode Only)	Character Time-Out Indication	No Characters Have Been Removed from or input to the RCVR FIFO During the Last 4 Character Times and there is at least 1 Character in it during this Time.	Reading the Receiver Buffer Register
0	0	1	0	Third	Transmitter Holding Register Empty	Transmitter Holding Register Empty	Reading the IIR Register (if Source of Interrupt) or Writing the Transmitter Holding Register
0	0	0	0	Fourth	MODEM Status	Clear to Send or Data Set Ready or Ring Indicator or Data Carrier Detect	Reading the MODEM Status Register

6.0 Serial Ports (Continued)

6.9 MODEM STATUS REGISTER (MSR)

This register provides the current state of the control lines from the MODEM (or peripheral device) to the CPU. In addition to this current-state information, four bits of the MODEM Status Register provide change information. These bits are set to a logic 1 whenever a control input from the MODEM changes state. They are reset to logic 0 whenever the CPU reads the MODEM Status Register. Table 6-2 shows the contents of the MSR. Details on each bit follow.

Bit 0 This bit is the Delta Clear to Send (DCTS) indicator. Bit 0 indicates that the $\overline{CTS}$ input to the chip has changed state since the last time it was read by the CPU.

Bit 1 This bit is the Delta Data Set Ready (DDSR) indicator. It indicates that the $\overline{DSR}$ input to the chip has changed state since the last time it was read by the CPU.

Bit 2 This bit is the Trailing Edge of Ring Indicator (TERI) detector. It indicates that the $\overline{RI}$ input to the chip has changed from a low to a high state.

Bit 3 This bit is the Delta Data Carrier Detect (DDCD) indicator. It indicates that the $\overline{DCD}$ input to the chip has changed state.

Note: Whenever bit 0, 1, 2, or 3 is set to logic 1, a MODEM Status Interrupt is generated.

Bit 4 This bit is the complement of the Clear to Send ($\overline{CTS}$) input. If bit 4 (loopback) of the MCR is set to a 1, this bit is equivalent to RTS in the MCR.

Bit 5 This bit is the complement of the Data Set Ready ($\overline{DSR}$) input. If bit 4 of the MCR is set to a 1, this bit is equivalent to DTR in the MCR.

Bit 6 This bit is the complement of the Ring Indicator (RI) input. If bit 4 of the MCR is set to a 1, this bit is equivalent to OUT1 in the MCR.

Bit 7 This bit is the complement of the Data Carrier Detect ($\overline{DCD}$) input. If bit 4 of the MCR is set to a 1, this bit is equivalent to IRQ ENABLE in the MCR.

6.10 SCRATCHPAD REGISTER (SCR)

This 8-bit Read/Write Register does not control the UART in any way. It is intended as a scratchpad register to be used by the programmer to hold data temporarily.

7.0 Parallel Port

7.1 INTRODUCTION

This parallel interface is designed to provide all of the signals and registers needed to communicate through a standard parallel printer port as found in the IBM PC-XT, PC-AT, PS/2 and Centronics systems. This parallel port supports three standard modes of operation: SPP, EPP, ECP. The Standard Parallel Port (SPP) is a software based protocol with performance of up to 150 kbps.

The Enhanced Parallel Port (EPP) is a hardware protocol which offers up to 2 Mbps.

The Extended Capabilities Port (ECP) is also a hardware protocol with up to 2 Mbps transfer rate. In addition, the ECP has FIFO's for receive and transmit, and DMA support, to reduce the CPU overhead. The ECP mode 0 is in fact compatible with the SPP mode. The ECP specification defines the AC/DC parameters of the signals to allow fast communication without termination problems.

All the above standards are incorporated into the 1284 IEEE specifications.

The address decoding of the registers utilizing A0 and A1 is shown in Table 7-1. Table 7-3 shows the Reset states of Parallel port registers and pin signals. These registers are shown in Section 7.2 to Section 7.4.

TABLE 7-1. Parallel Interface Register Addresses

A1	A0	Address	Register	Access
0	0	0	Data	Read/Write
0	1	1	Status	Read
1	0	2	Control	Read/Write
1	1	3	TRI-STATE	

Special circuitry provides protection against damage that might be caused when the printer is powered but the PC87303 is not.

There are two Standard Parallel Port (SPP) modes of operation (Compatible and Extended, see Table 7-2), two Enhanced Parallel Port (EPP) modes of operation and one Extended Capabilities Port (ECP) mode to complete a full IEEE 1284 parallel port.

TABLE 7-2. Standard Parallel Port Modes Selection

Port Function	PTR7
Compatible	0
Extended	1

In Compatible mode a write operation causes the data to be presented on pins PD0–PD7. A read operation in this mode causes the Data Register to present the last data written to it by the CPU. See Table 7-3.

In the Extended Mode a write operation to the data register causes the data to be latched. If the Data Port Direction bit (CTR5) is 0, the latched data is presented to the pins; if it is 1 the data is only latched. When Data Port Direction bit (CTR5) is 0, a read operation from this register allows the CPU to read the last data it wrote to the port. In the Extended Mode with the Data Port Direction bit set to 1 (read), a read from this register causes the port to present the data on pins PD0–PD7.

TABLE 7-3. SPP Data Register Read and Write Modes

PTR7	CTR5	$\overline{RD}$	$\overline{WR}$	Result
0	X	1	0	Data Written to PD0–7
0	X	0	1	Data Read from the Output Latch
1	0	1	0	Data Written to PD0–7
1	1	1	0	Data Written is Latched
1	0	0	1	Data Read from the Output Latch
1	1	0	1	Data Read from PD0–7

To support a high transfer rate, the I/O buffers of the parallel port signals require improved impedance matching. IEEE P1284 defines two types of I/O buffers, Level 1 (standard I/O buffers—open-drain with weak pull-up), and Level 2 (new I/O buffers—push-pull with driver impedance and slew rate according to new standards).

7.0 Parallel Port (Continued)

IEEE P1284, Draft 2.00, September 10, 1993, Microsoft's ECP Protocol, and ISA Interface Standard, revision 1.14, July 7, 1993 provide detailed descriptions of Level 2 I/O buffers.

When an EPP or ECP mode is configured, with the exception of ECP mode 000, the following parallel port pins have Level 2 I/O buffers: PD0–PD7, $\overline{STB}$, $\overline{AFD}$, $\overline{INIT}$, $\overline{SLIN}$, $\overline{ACK}$, $\overline{ERR}$, SLCT, PE and BUSY.

(See DC Electrical Characterisitics, Section 11.1 for further information.)

7.2 DATA REGISTER (DTR)

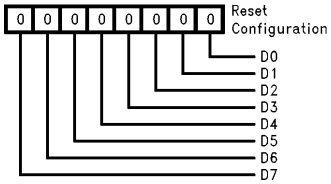

TL/C/12074–28

This is a bidirectional data port that transfers 8-bit date. The direction is determined by the PTR7 and the CTR5 bits. When PTR7 is high, the CTR5 bit will determine the data direction in conjunction with the Read and Write strobes. When PTR7 bit is low, the parallel port operates in the output mode only. See PTR7 bit and CTR5 bit for further information. The reset value of this register is 0. See Table 7-3.

7.3 STATUS REGISTER (STR)

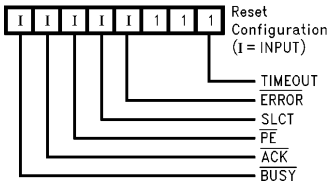

TL/C/12074–29

This register provides status for the signals listed below. It is a read only register. Writing to it is an invalid operation that has no effect.

Bit 0 When in EPP mode, this is the timeout status bit.
When this bit is 0, no timeout.
When this bit is 1, timeout occurred on EPP cycle (minimum 10 μs).
It is cleared to 0 after STR is read, i.e., consecutive reads (after the first read) always return 0. It is also cleared to 0 when EPP is enabled (bit 0 of PCR is changed from 0 to 1).
When not in EPP mode, this bit is 1.

Bit 1 Reserved, this bit is always 1.

Bit 2 In the compatible mode (PTR7 bit is 0), or in ECP and EPP bit 4 of PCR = 0, this bit is always one.

In the Extended Mode (PTR7 bit is 1), or in ECP and EPP with bit 4 of PCR = 1, this bit is the $\overline{IRQ}$ STATUS bit.

In the Extended mode if CTR4 = 1, then this bit is latched low when the $\overline{ACK}$ signal makes a transition from low to high. Reading this bit sets it to a one.

Bit 3 This bit represents the current state of the printer error signal ($\overline{ERROR}$). The printer sets this bit low when there is a printer error. This bit follows the state of the $\overline{ERR}$ pin.

Bit 4 This bit represents the current state of the printer select signal (SLCT). The printer sets this bit high when it is selected. This bit follows the state of the SLCT pin.

Bit 5 This bit represents the current state of the printer paper end signal (PE). The printer sets this bit high when it detects the end of the paper. This bit follows the state of the PE pin.

Bit 6 This bit represents the current state of the printer acknowledge signal ($\overline{ACK}$). The printer pulses this signal low after it has received a character and is ready to receive another one. This bit follows the state of the $\overline{ACK}$ pin.

Bit 7 This bit ($\overline{BUSY}$) represents the current state of the printer busy signal. The printer sets this bit low when it is busy and cannot accept another character. This bit is the inverse of the (BUSY/$\overline{WAIT}$) pin.

7.0 Parallel Port (Continued)

7.4 CONTROL REGISTER (CTR)

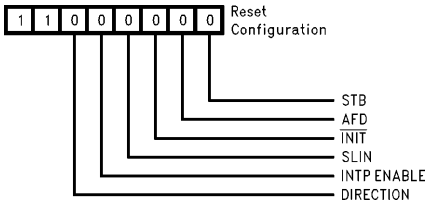

TL/C/12074–30

This register provides all output signals to control the printer. Except for bit 5, it is a read and write register.

Bit 0 This bit (STB) directly controls the data strobe signal to the printer via the $\overline{STB}$ pin. This bit is the inverse of the $\overline{STB}$ pin.

Bit 1 This bit (AFD) directly controls the automatic feed XT signal to the printer via the $\overline{AFD}$ pin. Setting this bit high causes the printer to automatically feed after each line is printed. This bit is the inverse of the $\overline{AFD}$ pin.

Bit 2 This bit ($\overline{INIT}$) directly controls the signal to initialize the printer via the $\overline{INIT}$ pin. Setting this bit to low initializes the printer. This bit follows the $\overline{INIT}$ pin.

Note: This pin must be set to 1 before enabling the EPP or ECP modes via bits 0 or 2 of the PCR register.

Bit 3 This bit (SLIN) directly controls the select in signal to the printer via the $\overline{SLIN}$ pin. Setting this bit high selects the printer. It is the inverse of the $\overline{SLIN}$ pin.

Bit 4 This bit controls the parallel port generated by the $\overline{ACK}$ signal. Its function changes slightly depending on the parallel port mode selected. In ECP mode this bit should be set to 0. In the following description, IRQx indicates either IRQ5 or IRQ7 (based upon PTR3).

Compatible mode:
when bit 4 = 0 IRQx is floated
when bit 4 = 1 IRQx follows $\overline{ACK}$ transitions

Extended mode:
when bit 4 = 0 IRQx is floated
when bit 4 = 1 IRQx becomes active on $\overline{ACK}$ trailing edge

EPP mode:
when bit 4 = 0 IRQx is floated
when bit 4 = 1 IRQx is pulsed when $\overline{ACK}$ is activated, or an EPP timeout occurs.

Bit 5 This bit determines the parallel port direction when bit 7 of PTR is 1. The default condition results in the parallel port being in the output mode. This is a **Read/Write** bit in EPP mode. In SPP mode it is a write only bit; a read from it will return 1. See Table 7-3 for further details.

Bits 6, 7 Reserved. These bits are always 1.

Normally when the Control Register is read, the bit values are provided by the internal output data latch. These bit values can be superseded by the logic level of the $\overline{STB}$, $\overline{AFD}$, $\overline{INIT}$, and $\overline{SLIN}$ pins, if these pins are forced high or low by an external voltage. In order to force these pins high or low the corresponding bits should be set to their inactive state (e.g., AFD = STB = SLIN = 0, $\overline{INIT}$ = 1). See Table 7-4.

TABLE 7-4. Parallel Port Reset States

Signal	Reset Control	State after Reset
$\overline{SLIN}$	MR	TRI-STATE
$\overline{INIT}$	MR	Zero
$\overline{AFD}$	MR	TRI-STATE
$\overline{STB}$	MR	TRI-STATE
IRQ5, 7	MR	TRI-STATE

7.5 ENHANCED PARALLEL PORT OPERATION

EPP mode provides for greater throughput, and more complexity, than Compatible or Extended modes by supporting faster transfer times and a mechanism that allows the host to address peripheral device registers directly. Faster transfers are achieved by automatically generating the address and data strobes. EPP is compatible with both Compatible and Extended mode parallel-port devices. It consists of eight (0–7) single-byte registers (See Table 7-5).

There are two EPP modes:

EPP rev 1.7 is supported when bit 0 of PCR is 1, and bit 1 of PCR is 0.

EPP rev 1.9 (IEEE 1284) is supported when bit 0 of PCR is 1, and bit 1 of PCR is 1.

EPP is supported for a parallel port whose base address is 278h or 378h, but not for a parallel port whose base address is 3BCh (there are no EPP registers at 3BFh). There are four EPP transfer operations: address write, address read, data write and data read. An EPP transfer operation is composed of a host read or write cycle (from or to an EPP register) and an EPP read or write cycle (from a peripheral device to an EPP register, or from an EPP register to a peripheral device).

7.0 Parallel Port (Continued)

TABLE 7-5. EPP Registers

Name	Offset	Mode	Type	Description
Data (DTR)	0	SPP/ EPP	R/W	A write to this register sets the state of the eight data pins on the 25-pin D-shell connector.
Status (STR)	1	SPP/ EPP	R	A read from this register presents the system microprocessor with the real-time status of five pins on the 25-pin D-shell connector, and the IRQ.
Control (CTR)	2	SPP/ EPP	R/W	A write operation to this port sets the state of four pins on the 25-pin D-shell connector, and controls both the parallel port interrupt enable and direction.
Address	3	EPP	R/W	A write operation to this port initiates an EPP device/register selection operation.
Data Port 0	4	EPP	R/W	Accesses to this port initiate device read or write operations with bits 0–7.
Data Port 1	5	EPP	R/W	This port is only accessed to transfer bits 8 to 15 of a 16-bit read or write to data port 0.
Data Port 2	6	EPP	R/W	This port is only accessed to transfer bits 16 to 23 of a 32-bit read or write to data port 0.
Data Port 3	7	EPP	R/W	This port is only accessed to transfer bits 24 to 31 of a 32-bit read or write to data port 0.

7.0 Parallel Port (Continued)

The software must write zero to bits 0, 1 and 3 of the CTR register, before accessing the EPP registers, since the pins controlled by these bits are controlled by hardware during EPP access. Once these bits are written with zero, the software may issue multiple EPP access cycles. The software must set bit 7 of the PTR register to 1, if bit 5 of CTR is to control direction.

To meet the EPP 1.9 specifications, the software should change direction (bit 5 of CTR) only when bit 7 of STR is 1 (i.e., change direction at EPP Idle Phase, as defined in the IEEE 1284 document).

When bit 7 of PTR is 0, EPP cycles to the external device are generated by invoking read or write cycles to the EPP.

When bit 7 of PTR is 1:

1. Reading an EPP register during forward direction (bit 5 of CTR is 0) is allowed only in EPP 1.7. It returns the register latched value (not the PD0–7 pins' value), and does not generate an EPP read cycle.
2. Writing to an EPP register during backward direction (bit 5 of CTR is 1) updates the register data, and does not generate an EPP write cycle.

EPP 1.7 Address Write

The following procedure selects a peripheral device or register. See also *Figure 7-1*.

1. The host writes a byte to the EPP address register. $\overline{WR}$ goes low to latch D0–D7 into the address register. The latch drives the address register onto PD0–7 and the EPP pulls $\overline{WRITE}$ low.
2. The EPP pulls $\overline{ASTRB}$ low to indicate that data has been sent.
3. If $\overline{WAIT}$ is low during the host write cycle, IOCHRDY goes low.

   When $\overline{WAIT}$ goes high, the EPP pulls IOCHRDY high.
4. When IOCHRDY goes high it causes $\overline{WR}$ to go high. If $\overline{WAIT}$ is high during the host write cycle then the EPP does not pull IOCHRDY to low.
5. When $\overline{WR}$ goes high it causes the EPP to pull $\overline{WRITE}$ and $\overline{ASTRB}$ to high.

   Only when $\overline{WRITE}$ and $\overline{ASTRB}$ are high can the EPP change PD0–7.

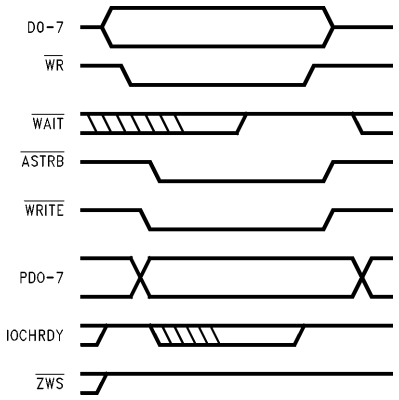

TL/C/12074–31

FIGURE 7-1. EPP 1.7 Address Write

EPP 1.7 Address Read

The following procedure reads from the address register. See also *Figure 7-2*.

1. The host reads a byte from the EPP address register. $\overline{RD}$ goes low to gate PD0–7 into D0–7.
2. The EPP pulls $\overline{ASTRB}$ low to signal the peripheral to start sending data.
3. If $\overline{WAIT}$ is low during the host read cycle, then the EPP pulls IOCHRDY low.

   When $\overline{WAIT}$ goes high, the EPP stops pulling IOCHRDY to low.
4. When IOCHRDY goes high it causes $\overline{RD}$ to go high if $\overline{WAIT}$ is high during the host read cycle then the EPP does not pull IOCHRDY to low.
5. When $\overline{RD}$ goes high, it causes the EPP to pull $\overline{ASTRB}$ high.

   Only when $\overline{ASTRB}$ is high can the EPP change PD0–7. After $\overline{ASTRB}$ goes high, the EPP puts D0–7 in TRI-STATE.

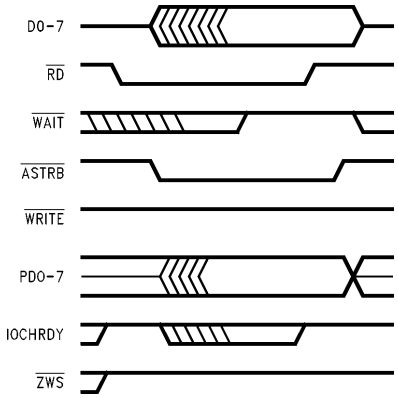

TL/C/12074–32

FIGURE 7-2. EPP 1.7 Address Read

EPP 1.7 Data Write and Data Read

This procedure writes to the selected peripheral device or register. See also *Figure 7-3*.

An EPP 1.7 data write operation is similar to the EPP 1.7 address write operation, and an EPP 1.7 data read operation is similar to the EPP 1.7 address read operation, except that the data strobe ($\overline{DSTRB}$ signal), and a data register, replace the address strobe ($\overline{ASTRB}$ signal) and the address register respectively.

EPP Zero Wait State (ZWS) Address Write/Read Operation (both 1.7 and 1.9)

The following procedure performs a short write to the selected peripheral device or register.

ZWS should be configured as follows: bit 5 of FCR is 1 and bit 6 of FCR is 0.

1. The host writes a byte to the EPP address register. $\overline{WR}$ goes low to latch D0–7 into the data register. The latch drives the data register onto PD0–7.

7.0 Parallel Port (Continued)

2. The EPP first pulls $\overline{\text{WRITE}}$ low, and then pulls $\overline{\text{ASTRB}}$ low to indicate that data has been sent.
3. If $\overline{\text{WAIT}}$ is high during the host write cycle, $\overline{\text{ZWS}}$ goes low and IOCHRDY goes high.
4. When the host pulls $\overline{\text{WR}}$ high, the EPP pulls $\overline{\text{ASTRB}}$, $\overline{\text{ZWS}}$ and $\overline{\text{WRITE}}$ to high.

   Only when $\overline{\text{WRITE}}$ and $\overline{\text{ASTRB}}$ are high can the EPP change PD0–7.
5. If the peripheral is fast enough to pull $\overline{\text{WAIT}}$ low before the host terminates the write cycle, the EPP pulls IOCHRDY to low, but does not pull $\overline{\text{ZWS}}$ to low, thus carrying out a normal (non-ZWS EPP 1.7) write operation.

   Note: A read operation is similar, except for the data direction, and the activation of $\overline{\text{RD}}$ instead of $\overline{\text{WR}}$.

EPP Zero Wait State (ZWS) Data Write/Read Operation (both 1.7 and 1.9)

An EPP 1.7 and 1.9 Zero Wait State data write/read operation is similar to the EPP Zero Wait State address write/read operation with the exception that the data strobe ($\overline{\text{DSTRB}}$ signal), and a data register, replace the address strobe ($\overline{\text{ASTRB}}$ signal) and the address register, respectively. See *Figure 7-3*.

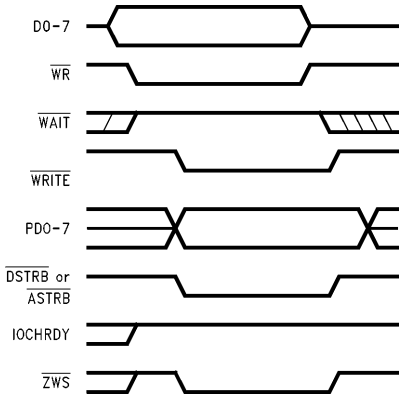

TL/C/12074–33

FIGURE 7-3. EPP Write with ZWS

EPP 1.9 Address Write

The following procedure selects a peripheral or register. See also *Figure 7-4*.

1. The host writes a byte to the EPP address register.
2. The EPP pulls IOCHRDY low, and waits for $\overline{\text{WAIT}}$ to go low.
3. When $\overline{\text{WAIT}}$ goes low the EPP pulls $\overline{\text{WRITE}}$ to low drives the latched byte onto PD0–PD7.

   If $\overline{\text{WAIT}}$ was already low, steps 2 and 3 occur concurrently.
4. The EPP pulls $\overline{\text{ASTRB}}$ low and waits for $\overline{\text{WAIT}}$ to go high.
5. When $\overline{\text{WAIT}}$ goes high, the EPP stops pulling IOCHRDY low, pulls $\overline{\text{ASTRB}}$ high, and waits for $\overline{\text{WAIT}}$ to go low.
6. Only if no EPP write is pending, when $\overline{\text{WAIT}}$ goes low, (or when bit 7 of PTR is 1, and the direction is changed to Backwards by setting bit 5 of CTR to 1), the EPP pulls $\overline{\text{WRITE}}$ to high.

   If an EPP write is pending $\overline{\text{WRITE}}$ remains low, and the EPP may change PD0–PD7.

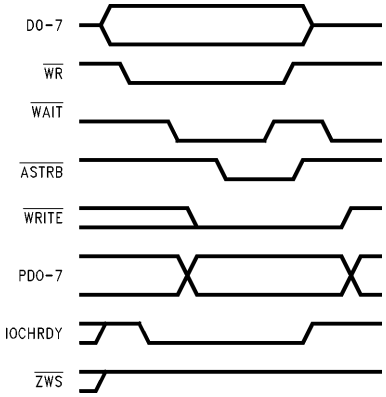

TL/C/12074–34

FIGURE 7-4. EPP 1.9 Address Write

EPP 1.9 Address Read

The following procedure reads from the address register. See also *Figure 7-5*.

1. The host reads a byte from the EPP address register. When $\overline{\text{RD}}$ goes low, the EPP pulls IOCHRDY low, and waits for $\overline{\text{WAIT}}$ to go low.

7.0 Parallel Port (Continued)

2. When $\overline{WAIT}$ goes low, the EPP pulls $\overline{ASTRB}$ low and waits for $\overline{WAIT}$ to go high.

   If wait was already low, steps 2 and 3 occur concurrently.
3. When $\overline{WAIT}$ goes high, the EPP stops pulling IOCHRDY low, latches PD0–PD7, and pulls $\overline{ASTRB}$ high.
4. When $\overline{RD}$ goes high, the EPP puts D0–7 in TRI-STATE.

EPP 1.9 Data Write and (Backward) Data Read

This procedure writes to the selected peripheral drive or register. See *Figure 7-5*.

EPP 1.9 data read and write operations are similar to EPP 1.9 address read and write operations, respectively, except that the data strobe ($\overline{DSTRB}$ signal) and a data register replace the address strobe ($\overline{ASTRB}$ signal) and the address register.

Table 7-6 shows the standard 25-pin, D-type connector definition for various parallel port operations.

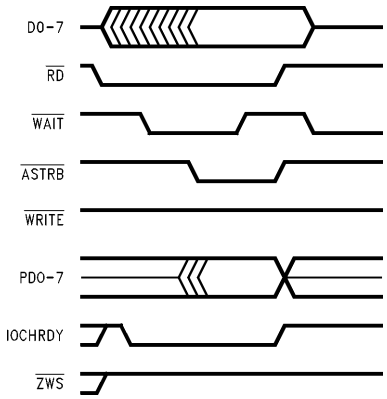

TL/C/12074–35

FIGURE 7-5. EPP 1.9 Address Read

TABLE 7-6. Parallel Port Pin Out

Connector Pin No.	Chip Pin No.	SPP, ECP Mode	Pin Direction	EPP Mode	Pin Direction
1	135	$\overline{STB}$	I/O	$\overline{WRITE}$	I/O
2	134	PD0	I/O	PD0	I/O
3	133	PD1	I/O	PD1	I/O
4	132	PD2	I/O	PD2	I/O
5	131	PD3	I/O	PD3	I/O
6	129	PD4	I/O	PD4	I/O
7	128	PD5	I/O	PD5	I/O
8	127	PD6	I/O	PD6	I/O
9	126	PD7	I/O	PD7	I/O
10	125	$\overline{ACK}$	I	$\overline{ACK}$	I
11	124	BUSY	I	$\overline{WAIT}$	I
12	123	PE	I	PE	I
13	122	SLCT	I	SLCT	I
14	116	$\overline{AFD}$	I/O	$\overline{DSTRB}$	I/O
15	117	$\overline{ERR}$	I	$\overline{ERR}$	I
16	118	$\overline{INIT}$	I/O	$\overline{INIT}$	I/O
17	119	$\overline{SLIN}$	I/O	$\overline{ASTRB}$	I/O

7.6 EXTENDED CAPABILITIES PARALLEL PORT (ECP)

7.6.1 Introduction

The ECP support includes a 16-byte FIFO that can be configured for either direction, command/data FIFO tags (one per byte), a FIFO threshold interrupt for both directions, FIFO empty and full status bits, automatic generation of strobes (by hardware) to fill or empty the FIFO, transfer of commands and data, and a Run Length Encoding (RLE) expanding (decompression) as explained below.

The Extended Capabilities Port (ECP) is enabled when bit 2 of PCR is 1. Once enabled, its mode is controlled via the mode field of ECR—bits 5,6,7 of ECR register.

The ECP has ten registers. See Table 7-7.

The AFIFO, CFIFO, DFIFO and TFIFO registers access the same ECP FIFO. The FIFO is accessed at Base + 000h, or Base + 400h, depending on the mode field of ECR and the register.

FIFO can be accessed by host DMA cycles, as well as host PIO cycles.

When DMA is configured and enabled (bit 3 of ECR is 1 and bit 2 of ECR is 0) the ECP automatically (by hardware) issues DMA requests to fill the FIFO (in the forward direction when bit 5 of DCR is 0) or to empty the FIFO (in the backward direction when bit 5 of DCR is 1). All DMA transfers are to or from these registers. The ECP does not assert DMA request for more than 32 consecutive DMA cycles. The ECP stops requesting DMA when TC is detected during an ECP DMA cycle.

Writing into a full FIFO, and reading from an empty FIFO, are ignored. The written data is lost, and the read data is undefined. The FIFO empty and full status bits are not affected by such access.

Some registers are not accessible in all modes of operation, or may be accessed in one direction only. Accessing a non accessible register has no effect: Data read is undefined, data written is ignored, the FIFO does not update. The PV87323VF Parallel Port registers (DRT, STR and CTR) are not accessible when ECP is enabled.

To improve noise immunity in ECP cycles, the state machine does not examine the control handshake response lines until the data has had time to switch.

IN ECP mode:

DATAR replaces DTR of SPP/EPP modes
DSR replaces SPR of SPP/EPP modes
DCR replaces CTR of SPP/EPP modes

A detailed description of the various modes follows in Sections 7.8–7.11.

TABLE 7-7. ECP Registers

Name	Address	I/O	Size	Mode # ECR (5–7)	Function
DATAR	Base + 000h	R/W	Byte	000,001	Parallel Port Data Register
AFIFO	Base + 000h	W	Byte	011	ECP Address FIFO
DSR	Base + 001h	R	Byte	ALL	Status Register
DCR	Base + 002h	R/W	Byte	ALL	Control Register
CFIFO	Base + 400h	W	Byte	010	Parallel Port Data FIFO
DFIFO	Base + 400h	R/W	Byte	011	ECP Data FIFO
TFIFO	Base + 400h	R/W	Byte	110	Test FIFO
CNFGA	Base + 400h	R	Byte	111	Configuration Register A
CNFGB	Base + 401h	R	Byte	111	Configuration Register B
ECR	Base + 402h	R/W	Byte	ALL	Extended Control Register

Base address is 278h, 378h or 3BCh, as specified in the FAR register.

7.6.2 Software Operation

Software operation is detailed in the document *Extended Capabilities Port Protocol and ISA Interface Standard.* To highlight the ECP usage some software operations are detailed below:

1. The software should enable ECP (bit 2 of PCR is 1) after bits 0–3 of the Parallel Port Control Register (CTR) are 0100.
2. When ECP is enabled, and the software wishes to switch modes, it should switch only through modes 000 or 001.
3. When ECP is enabled, the software should change direction only in mode 001.
4. The software should switch from mode 010, or 011 to mode 000, or 001, only when the FIFO is empty.
5. The software should switch to mode 011 when bits 0 and 1 of DCR are 0.
6. The software should switch to mode 010 when bit 0 of DCR is 0.
7. The software should disable ECP (bit 2 of PCR is 0) only when in mode 000 or 001.

Software may switch from mode 011 backward direction to modes 000 or 001 when there is an on-going ECP read cycle. In this case the read cycle is aborted by deasserting $\overline{AFD}$. The FIFO is reset (empty) and a potential byte expansion (RLE) is automatically terminated since the new mode is 000 or 001.

The $\overline{ZWS}$ signal is asserted by the ECP when ECP is enabled, and an ECP register is accessed by host PIO instructions, thus using a host zero wait cycle.

The ECP uses the X1/OSC clock. This clock can be frozen (a power-down mode). When this power-down mode occurs, the DMA is disabled, all interrupts (except $\overline{ACK}$) are masked, and the FIFO registers are not accessible (access is ignored). The other ECP registers are always accessible when the ECP is enabled. During this period the FIFO status and contents are not lost, although the host reads bit 2 of ECR as 0, bit 1 of ECR as 1 and bit 0 of ECR as 1, regardless of the actual values of these bits. When the clock starts toggling again these bits resume their original functions (values).

When the clock is frozen, an on-going ECP cycle may be corrupted but next ECP cycle will not start. This is true even if in forward direction the FIFO is not empty, and in backward direction the FIFO is not full. If the ECP clock starts or stops toggling during a host cycle that accesses the FIFO, the cycle may yield wrong data.

Note 1: The ECP outputs are inactive when the ECP is disabled.

Note 2: Only the FIFO/DMA/RLE are not functional when the clock is frozen. All other registers are accessible and functional. The FIFO/DMA/RLE are affected by ECR modifications. i.e., they are reset even when exits from modes 010/011 are carried out while the clock is frozen.

7.7 REGISTER DEFINITIONS

DATAR: Same as DTR register, except that read always returns the values of the PD0–PD7 pins (not the register latched data).

AFIFO: ECP Address FIFO Register. Write Only. In the forward direction (bit 5 of DCR is 0) a byte written into this register is pushed into the FIFO and tagged as command.

Reading this register has no effect and the data read is undefined. Writes to this register during backward direction (bit 5 of DCR is 1) have no effect and the data is ignored.

DSR: Read only. Same as the current STR register, except for bit 2, which is reserved.

Writes to this register have no effect and the data is ignored.

Note: The FDC has a register of the same name (DSR).

DCR: Same as the SPP CTR register, with the following exceptions:

1. When bit 5 of the DCR is 0 the ECP is in forward direction, and when bit 5 is high (1) the ECP is in backward direction.
2. The ECP drives the PD0-PD7 pins in the forward direction but does not drive them in the backward direction.
3. The direction bit, bit 5, is readable and writable.
4. When the control bit is read, the bit values are provided by the internal data latch. These bit values are not superseded by the logic level of the $\overline{STB}$, $\overline{AFD}$, $\overline{INIT}$ and $\overline{SLIN}$ pins.
5. Bit 4 of the DCR enables the $\overline{ACK}$ deassertion interrupt event (1 = enable, 0 = mask). If a level interrupt is configured (bit 4 of PCR is 1) clearing this bit clears the $\overline{ACK}$ pending interrupt request. This bit does not float the IRQ pin.

In mode 011, when bit 1 of DRC is 0, $\overline{AFD}$ is controlled by ECP hardware. When bit 1 of DCR is 1, $\overline{AFD}$ is driven low.

In mode 011 or 010, when bit 0 of DCR is 0, $\overline{STB}$ is controlled by the ECP hardware. When bit 0 of DCR is 1, $\overline{STB}$ is driven low.

CFIFO: Parallel Port FIFO Register. Write only.

A byte written, or DMAed, to this register is pushed into the FIFO and tagged as data.

Reading this register has no effect and the data read is undefined.

DFIFO: ECP Data FIFO Register.

In the forward direction (bit 5 of DCR is 0) a byte written, or DMAed, to this register is pushed into the FIFO and tagged as data.

Reading this register has no effect and the data read is undefined.

In the backward direction (bit 5 of DCR is 1) the ECP automatically issues ECP read cycles to fill the FIFO. Reading this register pops a byte from the FIFO.

Writing this register has no effect and the data written is ignored.

TFIFO: Test FIFO Register.
A byte written into this register is pushed into the FIFO. A byte read from this register is popped from the FIFO. The ECP does not issue a ECP cycle to transfer the data to or from the peripheral device.

The TFIFO is readable and writable in both directions. In the forward direction (bit 5 of DCR is 0) PD0–PD7 are driven, but the data is undefined.

7.0 Parallel Port (Continued)

The FIFO does not stall when overwritten or underrun (access is ignored). Bytes are always read from the top of the FIFO, regardless of the direction bit (bit 5 of DCR). For example if 44h, 33h, 22h, 11h is written into the FIFO, reading the FIFO returns 44h, 33h, 22h, 11h (in the same order it was written).

CNFGA: Configuration Register A. Read only.

Reading this register always returns 0001x100. Writing this register has no effect and the data is ignored.
Bit 3 of CNFGA reflects the value of bit 5 of the ASC register.

CNFGB: Configuration Register B. Read only.

Reading this register returns the configured parallel port interrupt line, and its state, as follows.

Bit 7 This bit is always 0.

Bit 6 Holds the (non-inverted) value on the configured IRQ pin.

Bits 5, 4 These bits are 1 when IRQ5 is configured, and 0 when IRQ7 is configured.

Bit 3 This bit is always 1.

Bits 2–0 These bits are always 0.
Writing this register has no effect and the data is ignored.

ECR: Extended Control Register. This register controls the ECP and parallel port functions. Upon reset this register is initialized to 00010101.

IOCHRDY is driven low on ECR read when the ECR status bits are not holding updated data.

Bits 7, 6, 5 (Mode) Bit 7 is the MSB of the three bits value.

000: Standard mode. Write cycles are performed under software control. $\overline{STB}$, $\overline{AFD}$, $\overline{INIT}$, and $\overline{SLIN}$ are open-drain outputs.

Bit 5 of DCR is ignored (assumes forward direction) and PD0–PD7 are driven. The FIFO is reset (empty).

001: PS/2 mode. Read and write cycles are performed under software control. The FIFO is reset (empty). $\overline{STB}$, $\overline{AFD}$, $\overline{INIT}$, and $\overline{SLIN}$ are open-drain outputs.

010: Parallel Port FIF0 mode. Write cycles are performed under hardware control ($\overline{STB}$ is controlled by hardware). Bit 5 of DCR is ignored (assumes forward direction) and PD0–PD7 are driven. $\overline{STB}$, $\overline{AFD}$, $\overline{INIT}$, and $\overline{SLIN}$ are open-drain output buffers when bit 1 of PCR is 0. When bit 1 of PCR is 1, the output buffers are push-pull.

011: ECP FIFO mode. The FIFO direction is controlled by bit 5 of DCR.

Read and write cycles to the device are performed under hardware control ($\overline{STB}$ and $\overline{AFD}$ are controlled by hardware). $\overline{STB}$, $\overline{AFD}$, $\overline{INIT}$, and $\overline{SLIN}$ are push-pull output buffers.

100: Reserved.

101: Reserved.

110: FIFO test mode. The FIFO is accessible via the TFIFO register.
The ECP does not issue ECP cycles to fill/empty the FIFO.

111: Configuration mode. The CNFGA and CNFGB registers are accessible in this mode.

Bit 4 ECP Interrupt Mask bit. When this bit is 0 an interrupt is generated on $\overline{ERR}$ assertion (the high-to-low edge of $\overline{ERR}$). An interrupt is also generated when ERR is asserted while this bit is changed from 1 to 0; this prevents the loss of an interrupt between ECR read and ECR write. When this bit is 1, no interrupt is generated.

Bit 3 ECP DMA Enable bit. When this bit is 0, DMA is disabled and the PDRQ pin is in TRI-STATE. When this bit is 1, DMA is enabled and DMA starts when bit 2 of ECR is 0.

Note: $\overline{PDACK}$ is assumed inactive when this bit is 0.

Bit 2 ECP Service bit. When this bit is 0, and one of the following three interrupt events occur, an interrupt is generated and this bit is set to 1 by hardware.

1. Bit 3 of ECR is 1, and terminal count is reached during DMA.
2. Bit 3 of ECR is 0 and bit 5 of DCR is 0, and there are eight or more bytes free in the FIFO.
3. Bit 3 of ECR is 0 and bit 5 of DCR is 1, and there are eight or more bytes to be read from the FIFO.

When this bit is 1, DMA and the above three interrupts are disabled.

Writing 1 to this bit does not cause an interrupt.

When the ECP clock is frozen this bit is read as 0, regardless of its actual value (even though the bit may be modified by software when the ECP clock is frozen).

Bit 1 FIFO Full bit. Read only.

This bit is 0 when the FIFO has at least one free byte.

This bit is 1 when the FIFO is full.

This bit continuously reflects the FIFO state, and therefore can only be read. Data written to this bit is ignored.

When the ECP clock is frozen this bit is read as 1, regardless of the actual FIFO state.

Bit 0 FIFO Empty bit. Read only.

This bit is 0 when the FiFO has at least one byte of data.

This bit is 1 when the FIFO is empty.

This bit continuously reflects the FIFO state, and therefore can only be read. Data written to this bit is ignored.

When the ECP clock is frozen this bit is read as 1, regardless of the actual FIFO state.

7.8 SOFTWARE CONTROLLED DATA TRANSFER (Modes 000 and 001)

Software controlled data transfer is supported in modes 000 and 001. The software generates peripheral-device cycles by modifying the DATAR and DCR registers and reading the DSR, DCR and DATAR registers. The negotiation phase and nibble mode transfer, as defined in the IEEE 1284 standard, are performed in these modes.

In these modes the FIFO is reset (empty) and is not functional, the DMA and RLE are idle.

Mode 000 is for the forward direction only; the direction bit is forced to 0 and PD0–7 are driven. Mode 001 is for both the forward and backward directions. The direction bit controls whether PD0–7 are driven.

7.9 AUTOMATIC DATA TRANSFER (Modes 010 and 011)

Automatic data transfer (ECP cycles generated by hardware) is supported only in modes 010 and 011. Automatic DMA access to fill or empty the FIFO is supported in modes 010, 011 and 110. Mode 010 is for the forward direction only. The direction bit is forced to 0 and PD0–7 are driven. Mode 011 is for both the forward and backward directions. The direction bit controls whether PD0–7 are driven.

Automatic Run Length Expanding (RLE) is supported in the backward direction.

Note 1: FIFO-full condition is checked before every expanded byte push.

Note 2: A pending DMA request is removed, and a pending RLE expansion is aborted, when you switch from modes 010 or 011 to other modes.

Note 3: The two FIFO ports are neither synchronized nor linked together, except via the empty and full FIF0 status bits. The FIFO shall not delay the push and pop operations, even when they are performed concurrently. Care must be taken not to corrupt PD0–PD7 or D0–7 while the other FIFO port is accessed.

Note 4: In the forward direction, the empty bit is updated when the ECP cycle is completed, not right after the last byte is popped out of the FIFO (valid cleared on cycle end).

Note 5: $\overline{ZWS}$ is not asserted for DMA cycles.

Note 6: The one-bit command/data tag is used only in forward direction.

7.9.1 Forward Direction (bit 5 of DCR = 0)

When the ECP is in forward direction and the FIFO is not full (bit 1 of ECR is 0) the FIFO can be filled by software writes to the FIFO registers (AFIFO and DFIFO in mode 011, and CFIFO in mode 010).

When DMA is enabled (bit 3 of ECR is 1 and bit 2 of ECR is 0) the ECP automatically issues DMA requests to fill the FIFO with normal data byte.

When the ECP is in forward direction and the FIFO is not empty (bit 0 of ECR is 0) the ECP pops a byte from the FIFO and issues write cycle to the peripheral device. The ECP drives $\overline{AFD}$ according to the operation mode (ECR bits 5–7) and according to the tag of the popped byte as follows: In Parallel Port FIFO mode (mode 010) $\overline{AFD}$ is controlled by bit 1 of DCR. In ECP mode (mode 011) $\overline{AFD}$ is controlled by the popped tag. $\overline{AFD}$ is driven high for normal data byte and driven low for command byte.

7.9.2 ECP Forward Write Cycle

An ECP write cycle starts when the ECP drives the popped tag onto $\overline{AFD}$ and the popped byte onto PD0–7. When BUSY is low the ECP asserts $\overline{STB}$. In 010 mode the ECP deasserts $\overline{STB}$ to terminate the write cycle. In 011 mode the ECP waits for BUSY to be high before it deasserts $\overline{STB}$.

When BUSY is high the ECP deasserts $\overline{STB}$ and changes $\overline{AFD}$ and PD0–7 only after BUSY is low.

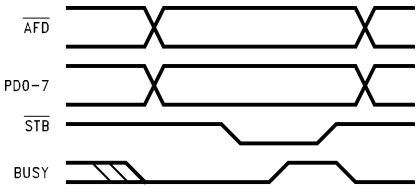

TL/C/12074–36

FIGURE 7-6. ECP Forward Write Cycle

7.9.3 Backward Direction (bit 5 of DCR is 1)

When the ECP is in the backward direction, and the FIFO is not full (bit 1 of ECR is 0), the ECP issues a read cycle from the peripheral device and monitors the BUSY signal. If BUSY is high the byte is a data byte and it is pushed into the FIFO. If BUSY is low the byte is a command byte. The ECP checks bit 7 of the command byte, if it is high the byte is ignored, if it is low the byte is tagged as an RLC byte (not pushed into the FIFO but used as a Run Length Count to expand the next byte read). Following an RLC read the ECP issues a read cycle from the peripheral device to read the data byte to be expanded. This byte is considered a data byte, regardless of its BUSY state (even if it is low). This byte is pushed into the FIFO (RLC + 1) times (i.e., RLC = 0: push the byte once, RLC = 127: push the byte 128 times).

When the ECP is in the backward direction, and the FIFO is not empty (bit 0 of ECR is 0), the FIFO can be emptied by software reads from the FIFO register (only DFIFO in mode 011, no AFIFO and CFIFO read).

When DMA is enabled (bit 3 of ECR is 1 and bit 2 of ECR is 0) the ECP automatically issues DMA requests to empty the FIFO (only in mode 011).

7.9.4 ECP Backward Read Cycle

An ECP read cycle starts when the ECP drives $\overline{AFD}$ low.

The peripheral device drives BUSY high for a normal data read cycle, or drives BUSY low for a command read cycle, and drives the byte to be read onto PD0–7.

When $\overline{ACK}$ is asserted the ECP drives $\overline{AFD}$ high. When $\overline{AFD}$ is high the peripheral device deasserts $\overline{ACK}$. The ECP reads the PD0–7 byte, then drives $\overline{AFD}$ low. When $\overline{AFD}$ is low the peripheral device may change BUSY and PD0–7 states in preparation for the next cycle.

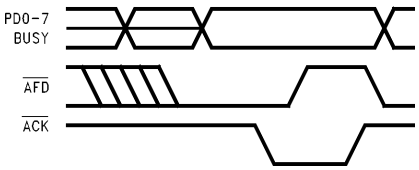

TL/C/12074–37

FIGURE 7-7. ECP Backward Read Cycle

7.0 Parallel Port (Continued)

7.10 FIFO TEST ACCESS (Mode 110)

Mode 110 is for testing the FIFO in PIO and DMA cycles. Both read and write operations (pop and push) are supported, regardless of the direction bit.

In the forward direction PD0–PD7 are driven, but the data is undefined. This mode can be used to measure the host-ECP cycle throughput, usually with DMA cycles. This mode can also be used to check the FIFO depth and its interrupt threshold, usually with PIO cycles.

7.11 CONFIGURATION REGISTERS ACCESS (Mode 111)

The two configuration registers, CNFGA and CNFGB, are accessible only in this mode.

7.12 INTERRUPT GENERATION

An interrupt is generated when any of the following events occurs:

1. When bit 2 of ECR is 0, bit 3 of ECR is 1 and TC is asserted during ECP DMA cycle.
2. When bit 2 of ECR is 0, bit 3 of ECR is 0, bit 5 of DCR is 0 and there are eight or more bytes free in the FIFO. It includes the case when bit 2 of ECR is cleared to 0 and there are already eight or more bytes free in the FIFO (modes 010, 011 and 110 only).
3. When bit 2 of ECR is 0, bit 3 of ECR is 0, bit 5 of DCR is 1 and there are eight or more bytes to be read from the FIFO. It includes the case when bit 2 of ECR is cleared to 0 and there are already eight or more bytes to be read from the FIFO (modes 011 and 110 only).
4. When bit 4 of ECR is 0 and $\overline{ERR}$ is asserted (high to low edge) or $\overline{ERR}$ is asserted when bit 4 of ECR is modified from 1 to 0.
5. When bit 4 of DCR is 1 and $\overline{ACK}$ is deasserted (low-to-high edge).

The interrupt is generated according to bits 4, 5 and 6 of PCR.

Note: Interrupt events #2, #3 and #4 are level events, thus they are shaped as interrupt pulses. These interrupts are masked (inactive) when the ECP clock is frozen. Interrupt event #1 is a pulse event. The last interrupt event behaves as in the normal SPP mode: the IRQ signal follows the $\overline{ACK}$ signal transition (when bit 5 of PCR is 0 and bit 6 of PCR is 0). Note that interrupt event #4 may be lost when the ECP clock is frozen.

8.0 Integrated Device Electronics Interface (IDE)

8.1 INTRODUCTION

Another key interface for PC design is facilitated through the use of the PC87303 **IDE** (Integrated Drive Electronics) Hard Disk interface. Only three buffer chips are required to construct the IDE Hard Disk Interface circuit.

The IDE interface is essentially the PC-AT bus ported to the hard drive. The hard disk controller resides on the hard drive itself. So the IDE interface circuit must provide the PC-AT bus signals, including data bits D15–0, address lines A3–0, as well as the common control signals.

8.2 IDE SIGNALS

Using 'LS244 devices in the IDE interface provides buffering of the control and address lines. Four control signals, $\overline{IDEHI}$, $\overline{IDELO}$, $\overline{HCS0}$, $\overline{HCS1}$, one status signal, $\overline{IOCS16}$, and one data signal, IDED7, are required by the IDE interface. The PC87303 provides all of these signals. They are summarized below.

$\overline{IDEHI}$ enables an 'LS245 octal bus transceiver for the upper data lines (D15–8) during 16-bit read and write operations at addresses 1F0–1F7. $\overline{IDEHI}$ will activate the 'LS245 only if the $\overline{IOCS16}$ output from the hard drive is active. $\overline{IDELO}$ enables another 'LS245 octal bus transceiver for the lower data lines (D7–0) during all (1F0–1F7, 3F6 and 3F7) reads and writes.

The IDED7 signal insures that the D7 data bus signal line is disabled for address 3F7 (this bit is used for the Disk Changed register on the floppy disk controller at that address).

The two 'LS245 chips are used to enable or TRI-STATE the data bus signals. In the PC-AT mode the PC87303 provides the two hard disk chip selects ($\overline{HCS0}$, $\overline{HCS1}$) for the IDE interface.

The $\overline{HCS0}$ output is active low when the 1F0–1F7h I/O address space is chosen and corresponds to the 1FX signal on the IDE header.

The $\overline{HCS1}$ output is active low when the 3F6 or 3F7 I/O addresses are chosen and corresponds to 3FX on the IDE header. These are the two address blocks used in the PC-AT hard disk controller.

Table 8-1 summarizes the addresses used by the PC-AT hard disk controller.

TABLE 8-1. IDE Registers and Their ISA Addresses

Address	Read Function	Write Function
1F0	Data	Data
1F1	Error	Features (Write Precomp)
1F2	Sector Count	Sector Count
1F3	Sector Number	Sector Number
1F4	Cylinder Low	Cylinder Low
1F5	Cylinder High	Cylinder High
1F6	Drive/Head	Drive/Head
1F7	Status	Command
3F6	Alternate Status	Device Control
3F7	Drive Address (Note)	Not Used. Data Bus TRI-STATE

Note: Data bus bit D7 is dedicated to the floppy disk controller at this address. When reading this address the floppy disk controller disk change status will be provided by bit D7. There is no write function at this address in the IDE associated with this bit.

8.0 Integrated Device Electronics Interface (IDE) (Continued)

The IDE Interface Circuit has some additional IDE DMA support. When bit 1 of FCR is 1, the PC87303 IDE responds to a DMA acknowledgement on the $\overline{IDEACK}$ input pin as follows:

a) $\overline{IDEL0}$ is asserted when IDEACK is asserted and either $\overline{RD}$ or $\overline{WR}$ is asserted.

b) IDED7 is functional (i.e., read: IDED7 to D7, write D7 to IDED7) when $\overline{IDEACK}$ is asserted and either $\overline{RD}$ or $\overline{WR}$ is asserted.

c) $\overline{HCS1,0}$ are not asserted on DMA cycles.

The equations shown in *Figure 8-1* define the signals of the PC87303 IDE pins.

Equations	Comments
$\overline{HCS0} = \overline{A9}*A8*A7*A6*A5*A4*\overline{A3}*\overline{AEN}$	Active at 1F0–1F7
$\overline{HCS1} = A9*A8*A7*A6*A5*A4*\overline{A3}*A2*A1*\overline{AEN}$	Active at 3F6, 3F7
$\overline{IDELO} = [\overline{HCS0}*(\overline{RD} + \overline{WR})] + \{\overline{HCS1} * [(\overline{WR}*\overline{A0}) + \overline{RD}]\}$	Write 1F0–1F7, 3F6; Read 1F0–1F7, 3F6, 3F7
$\overline{IDEHI} = \overline{IOCS16}*\overline{HCS0}*(\overline{RD} + \overline{WR})$	Read or Write 1F0–1F7 in AT Mode
IDED7 (read) $= (\overline{HCS0}*\overline{RD}) + [(\overline{HCS1}*\overline{A0})*\overline{RD}]$	Provides D7 during Read 1F0–1F7 and 3F6
IDED7 (write) $= \overline{WR}*[\overline{HCS0} + (\overline{HCS1}*\overline{A0})]$	Provides D7 during Write 1F0–1F7 and 3F6

FIGURE 8-1. IDE Interface Signal Equations (Non-DMA)

9.0 Keyboard Controller and Real-Time Clock

The keyboard controller (KBC) is a general purpose 8-bit microcontroller. It consists of 256 Bytes of data memory and 2 kBytes of Read-Only Memory (ROM), two 8-bit I/O ports, a three register system interface, an 8-bit timer/counter, and facilities for both binary and Binary Coded Decimal (BCD) arithmetic. *Figure 9-1* shows the relationships of these functional blocks and *Figure 9-2* displays the interface between the PC87303 and a host system.

The ROM may be custom programmed during manufacture according to customer requirements. These versions of devices are available by special order. For applications which require program development capabilities, the RAM-based PC87323 SuperI/O Sidewinder is recommended.

The I/O ports provide up to 18 programmable lines for dedicated control functions. Four lines may be used to expand the number of I/O ports.

The KBC is software compatible with the 8042AH industry standard keyboard controller as well as National's PC87911. The PC87303 can execute code previously written for an 8042 without further development.

The following sections will describe in detail the operation of the functional blocks shown in *Figure 9-1*.

The RTC supports a 100-year calendar as well as a time-of-day clock with alarm features and battery backup.

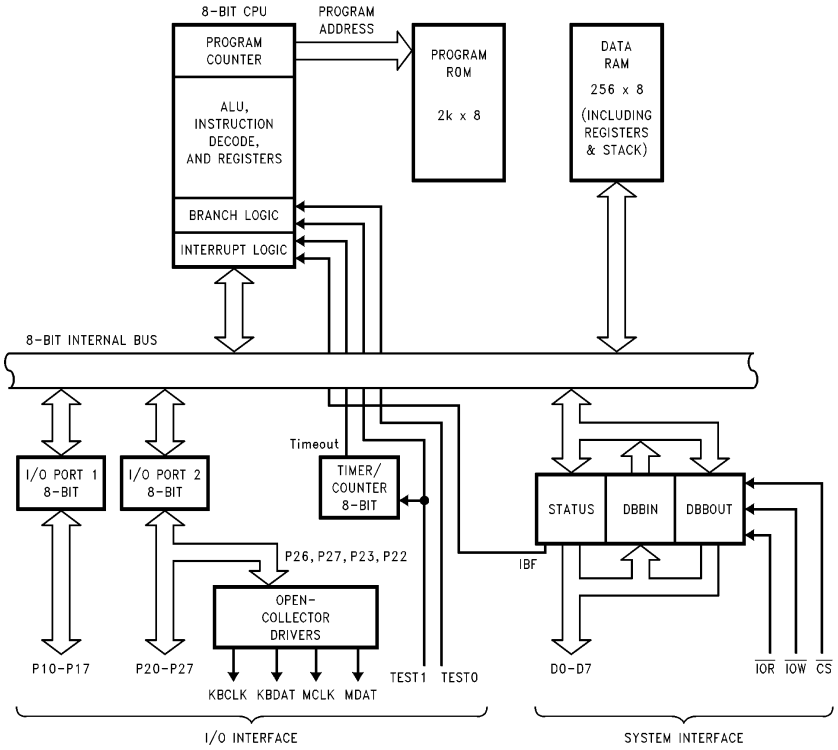

TL/C/12074–39

FIGURE 9-1. Keyboard Controller Functional Block Diagram

9.0 Keyboard Controller and Real-Time Clock (Continued)

9.1 PC87303 KBC FUNCTION

9.1.1 Host System Interface

Common Signals

The keyboard controller is interfaced to the host system through a common system interface. The interface consists of the address bus A0–A9, Address Enable (AEN) signal, data bus D0–D7, and control signals I/O Read ($\overline{IOR}$), I/O Write ($\overline{IOW}$), and Chip Select ($\overline{CS}$) (see *Figure 9-2*).

Address bus A0–A9 connects to the system address SA0–SA9 of the system. The PC87303 uses the system address and the AEN signal to decode the access to the configuration register.

Data bus D0–D7 connects to the peripheral bus XD0–XD7 of the system.

The $\overline{IOR}$ and $\overline{IOW}$ inputs connect to the $\overline{IOR}$ and $\overline{IOW}$ lines of the system. All read and write operations to the PC87303 are I/O operations.

The $\overline{CS}$ pin is the keyboard controller chip-select. It must be connected to the keyboard controller chip/select signal of the system when bit 6 of KRR is 0. The PC87303 decodes the keyboard controller chip-select from A0–A9 (60h or 64h) when bit 6 of KRR is 1.

System Interface Registers

The keyboard controller consists of three 8-bit registers: Data Byte Buffer Output (DBBOUT), Data Byte Buffer Input (DBBIN), and STATUS. See *Figure 9-2*.

The DBBOUT register is used to transfer data from the keyboard controller to the host system. It is written by the keyboard controller using the OUT DBB,A instruction. A data read operation by the host system reads its content.

The DBBIN register is used to transfer data from the host system to the keyboard controller. It is written by the host system. It is read by the keyboard controller using an IN A, DBB instruction.

The STATUS register holds status information related to the system interface. *Figure 9-3* shows the bit definition. It is read-only by the system.

	ST7	ST6	ST5	ST4	F1	F0	IBF	OBF
bit	7	6	5	4	3	2	1	0

FIGURE 9-3. Status Register

Bit 0 OBF. Output Buffer Full. A 1 indicates that data is written into the DBBOUT register. It is cleared by a system read operation.

Bit 1 IBF. Input Buffer Full. When a write operation is performed by the host system, it will be set to 1. Upon executing an IN A,DBB instruction, it will be cleared.

Bit 2 F0. A general purpose flag that can be cleared or toggled by the keyboard controller software.

Bit 3 F1. Command/Data Flag. This flag holds the state of A2 when the host system performs a write operation. It is typically used to distinguish between commands and data coming from the host system. For example; when A2 = 1, F1 = 1 and indicates a command was written by the host. When A2 = 0, F1 = 0, indicating data was written by the host.

Bits 4-7 ST4–ST7. General purpose flags. They can be written by a MOV STS,A instruction.

Table 9-1 shows the register address decoding utilized by the keyboard control system interface.

TABLE 9-1. Summary of System Interface Operations

$\overline{RD}$	$\overline{WR}$	A2	$\overline{CS}$*	Operation
0	1	0	0	Read DBBOUT
1	0	0	0	Write DBBIN, F1 Clear
0	1	1	0	Read STATUS
1	0	1	0	Write DBBIN, F1 Set
X	X	X	1	No Operation

*For further information about $\overline{CS}$; refer to bit 6 of KRR.

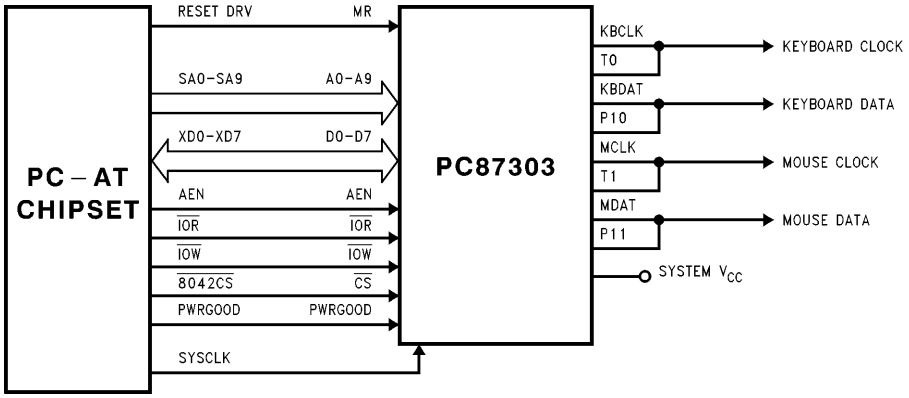

TL/C/12074–38

FIGURE 9-2. Keyboard Controller to Host System Interface

P24–P27 can be used to enhance the interface to the host system. P24 and P25 can be used to reflect the state of the OBF and IBF flags respectively in the STATUS register using the ''EN FLAGS'' instruction. After executing this instruction, P24 reflects the value of the OBF pin and P25 reflects the value of the $\overline{IBF}$ pin. Data written to P24 and P25 serve as a mask to the output. When a 1 is written, P24 outputs the state of the OBF flag and P25 outputs the complement state of the IBF flag. When 0 is written, the output is forced to zero. These OBF and $\overline{IBF}$ pins can be used as the interrupt requests to the host system for data transfer handshaking.

The ''EN DMA'' instruction configures P26 and P27 as DRQ and $\overline{DACK}$ pins. After executing this instruction, P26 and P27 can be utilized for DMA transfers between the host system and the PC87303. P26 goes active when 1 is written to it. It can be used as the DRQ to the host system. When P27 which is connected to the $\overline{DACK}$ of the system is pulled active, data can be read or written through D0–D7, hence completing the DMA cycle. P26 is reset to zero when P27 is pulled active or the ''EN DMA'' instruction is executed. The latter case allows the PC87303 to abort a DMA request.

9.1.2 Program Memory

The keyboard controller of the PC87303 has a 2k x 8 ROM based program memory. An 10-bit program counter allows direct access to every location of the program memory. *Figure 9-4* shows the memory map. There are three special locations associated with hardware functions.

1. 000h After the keyboard controller is reset, the program counter is initialized to 000h.
2. 003h When the input buffer of the host interface (DBBIN) is full, and the IBF interrupt is enabled, the CPU makes an interrupt call to this location.
3. 007h When the timer overflows and the timer interrupt is enabled, the CPU makes an interrupt call to this location.

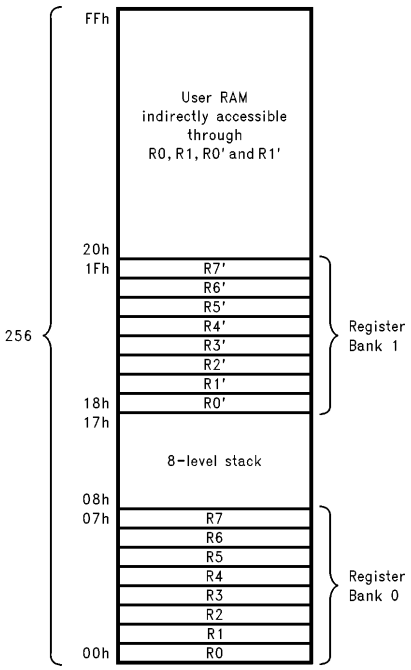

TL/C/12074–40

FIGURE 9-4. Keyboard Controller Data Memory Map

9.1.3 Data Memory and Registers

The keyboard controller has 256 Bytes of data memory, including 2 banks of registers, 8 registers each, and an 8-level stack. *Figure 9-4* shows the data RAM organization.

RAM locations 0h–7h are used as register bank0. They are designated as R0–R7 respectively. Register bank1 (R0′–R7′) are located in 18h–1Fh of the address map. Bank0 is the default register bank when the chip comes out from reset. Bank switching is accomplished by using ''register bank select'' instructions (SEL RB0, SEL RB1). Locations 8h–17h are reserved for the stack. Each stack entry consists of 2 bytes. *Figure 9-5* shows the organization of the stack. The stack pointer in the PSW register points to the top of the stack. A 0 in the stack pointer corresponds to RAM locations 8h and 9h.

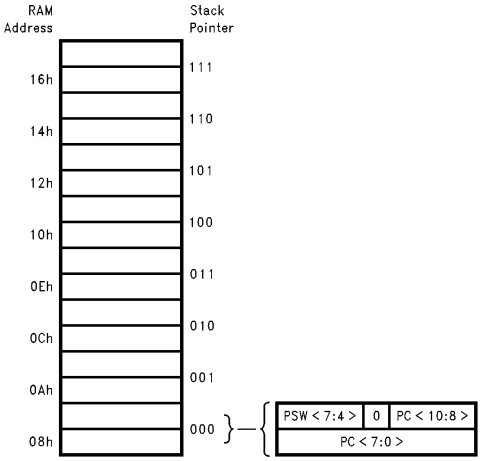

TL/C/12074–41

FIGURE 9-5. Keyboard Controller Stack Organization

Program Status Word Register (PSW)

This 8-bit register holds the program execution status. The bit definition of the PSW register is shown in *Figure 9-6*.

	CY	AC	F0	BS	rsv	SP <2:0>
bit	7	6	5	4	3	2-0

FIGURE 9-6. PSW Register Bits

Bit 7 CY. Carry flag of the accumulator.

Bit 6 AC. Auxiliary Carry flag of the accumulator, i.e., carry from bit 3 to 4 of the ALU.

Bit 5 F0. Flag 0. A general purpose software flag.

Bit 4 BS. The current active register bank. 0 = bank 0, 1 = bank 1.

Bit 3 Reserved. User should not change its power-up value.

Bits 2-0 Stack Pointer. 3-bit Stack Pointer for 8-level stack.

When the CPU performs a subroutine call or interrupt call, the PC and the upper 4 bits of the PSW are pushed into the stack. Upon return, the PSW can be restored in option. If a RETR Return instruction is executed, PSW is restored. PSW is not restored if an RET Return instruction is executed. See *Figure 9-5*.

9.1.4 I/O Interface

The keyboard controller of the PC87303 provides 16 general purpose I/O lines, two open-collector output lines and two input lines as shown in the Functional Block Diagram in *Figure 9-1*.

General Purpose I/O

The 16 general purpose I/O lines, P10–P17 and P20–P27, are mapped to Port 1 and Port 2 respectively. These I/O lines are quasi-bidirectional because the output buffer cannot be turned off even if the I/O line is intended for input. When a 0 is written to an I/O line, it behaves like an output. When a 1 is written to an I/O line, it behaves like an input. On reset, all I/O lines are inputs.

Figure 9-7 illustrates the structure of the I/O line. Q1 and Q2 are the normal output transistors. When the I/O line is intended for output, 0 is written into the flip-flop, which latches, and Q2 turns on. When 1 is written, Q1 turns on briefly because it is gated by a short port-write pulse also. Q1 charges up the pad to near V_{CC} and then turns off. An active pull-up transistor Q3 turns on also, but it provides a large pull-up resistance because it is a weak transistor. At this stage, the I/O line can be used as input: a low impedance low voltage can override the pin and the input buffer reads a low level input. If the pin is driven high or undriven, a high level is read. Therefore, to use a port pin as input, a logic 1 must first be written to it. When the keyboard controller is reset, all port lines will be initialized to logic 1.

Because Q1 turns on momentarily when a write to the port is performed there is potential for a current surge. A series resistor connected to those port lines used as inputs, is recommended to limit the potential surge *(Figure 9-8)*.

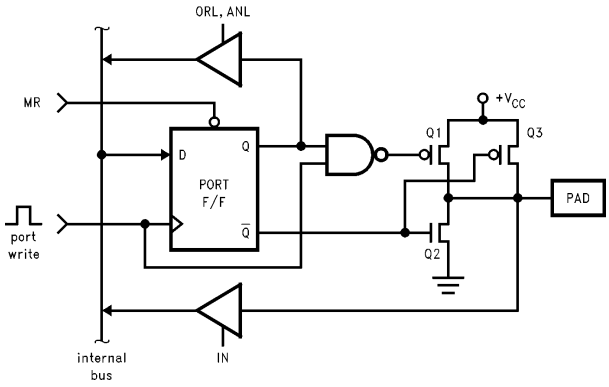

TL/C/12074–42

FIGURE 9-7. Active Pull-Up I/O Port Structure

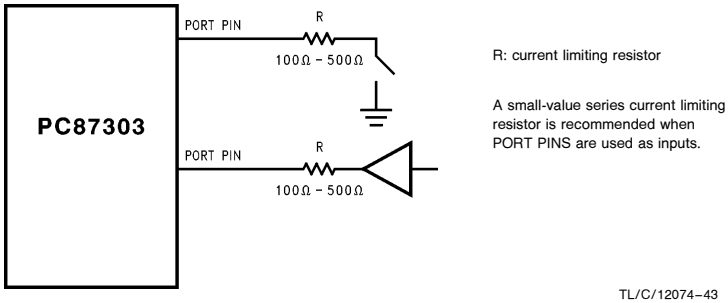

TL/C/12074–43

FIGURE 9-8. Using Port Pins as Inputs

When the port line is used as an output, an active pull-up technique is used (instead of a traditional pull-up resistor), which turns on Q3 only when Q2 is off, hence eliminating a steady current flow.

Open-Collector Outputs

In order to reduce the glue logic used in a PC-AT compatible environment, four dedicated open-collector outputs are provided: KBCLK, KBDAT, MCLK and MDAT. KBCLK is the complement of P26. KBDAT is the complement of P27. MCLK is the complement of P23. MDAT is the complement of P22. These four drivers can drive 16 mA, making them suitable for driving keyboard and mouse cables. TEST0 and TEST1 must be externally connected to KBCLK and KBDAT in the PC-AT compatible applications.

Test Inputs

TEST0 and TEST1 are two dedicated input pins. Conditional jump instructions directly check the level of these two pins. TEST1 also serves as the event counter input.

Connection to the I/O Expander

The number of keyboard controller I/O pins can be expanded by adding one or more 8243 I/O Expander chips. Each I/O expander offers 16 I/O port pins designated as Port 4, 5, 6, and 7. The keyboard controller makes use of the P20–P24 and the Strobe pin to interface with the 8243.

9.1.5 Timer/Counter

The keyboard controller is equipped with an 8-bit counter which can be used as a timer or an event counter. *Figure 9-9* shows the two different clock sources for the counter. The clock source is selected by software.

Timer Operation

The counter can be set to the timer operation mode by connecting its clock source to the internal timing generator. The clock frequency to the timer is equal to the oscillator frequency divided by 480.

The initial value of the timer is programmable. After the timer is started (by STRT T instruction), it counts up continuously until it is stopped or the keyboard controller is reset. The Timer Overflow Flag is set when the count value overflows from FFh back to 00h. The Timer Overflow Flag can be tested by a conditional jump instruction (JTF). This instruction also resets the flag. When the timer interrupt is enabled, an interrupt occurs when the timer overflows. This is discussed more detail in the interrupt section.

Event Counter Operation

When the clock input of the counter is switched to the external input (TEST1), it essentially becomes an event counter. The falling edge of the signal on the TEST1 pin causes the counter to increment. Timer Overflow Flag and Timer interrupt operate in the same way as they do in the timer mode.

9.1.6 Interrupts

The keyboard controller of the PC87303 provides 2 different internal interrupts. They are the Input Buffer Full (IBF) interrupt and Timer Overflow interrupt. These two interrupts can be independently enabled or disabled by software. Both of them are disabled when the chip comes out from reset.

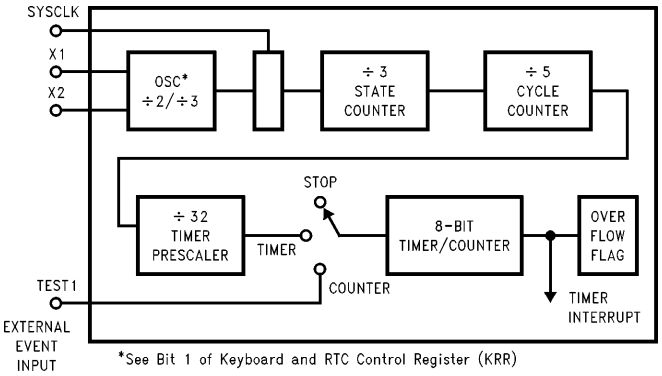

TL/C/12074–44

FIGURE 9-9. Timing Generation and Timer Circuit

Timer Interrupt

If the timer interrupt is enabled, upon the timer overflow, an interrupt occurs. It causes the program to perform a subroutine call to program address 007h. The interrupt is cleared by this subroutine call. The current Program Counter (PC) and the upper 4 bits of the PSW is pushed into the stack before the call occurs. At the end of the timer interrupt service routine, an RETR instruction restores the PSW and the PC. Because the timer interrupt has a lower priority than the IBF interrupt, simultaneous IBF and timer interrupts cause the timer interrupt to be pending. It is served as soon as the program returns from the IBF interrupt service routine.

Input Buffer Full (IBF) Interrupt

If the IBF interrupt is enabled, when there is a host write operation to the keyboard controller ($\overline{CS} = 0$, $\overline{IOW} = 0$), an interrupt occurs. The processor saves the current Program Counter and the upper 4 bits of the PSW into the stack and performs a subroutine call to the program address 003h. Upon entering the interrupt service routine, further interrupts are held off. The interrupt is re-enabled upon the execution of the RETR instruction.

9.1.7 Oscillator and Instruction Timing

The oscillator pins of the keyboard controller are X1 and X2, when bit 7 of KRR is 0. When bit 7 of KRR is 1, the Keyboard Controller clock is SYSCLK. *Figures 9-10* and *9-11* show the connections for internal and external clock configuration via X1 and X2 pins.

The oscillator clock is divided by 3 to generate the state timing, then is further divided down by 5 to generate the instruction timing *(Figure 9-12)*. Hence each instruction cycle consists of 5 states and 15 clock cycles.

Most of the keyboard controller instructions require only one instruction cycle. The others require two cycles. Refer to the instruction set for details.

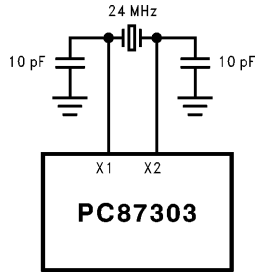

TL/C/12074–45

FIGURE 9-10. Internal Clock Connection

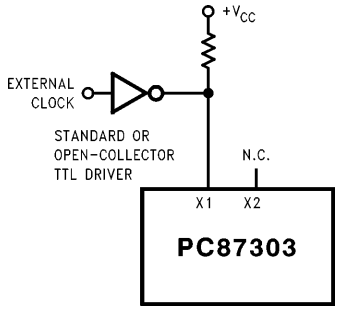

TL/C/12074–46

FIGURE 9-11. External Clock Connection

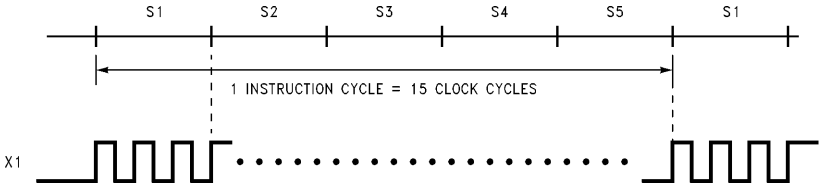

TL/C/12074–47

FIGURE 9-12. Instruction Cycle Timing

9.2 REAL-TIME CLOCK FUNCTION

The RTC in the PC87303 is a low-power clock that provides a time-of-day clock and 100-year calendar with alarm features and battery operation. Other features include three maskable interrupt sources and 242 bytes of general purpose RAM. Valid RAM and time can be maintained through the use of an external battery source. It is software compatible with the DS1287 and MC146818.

9.2.1 Memory Map

The RTC contains 14 time and control registers. It also contains 242 bytes of general purpose battery backed static RAM in two banks. RAMSEL is used to select the active bank. Refer to Table 9-2.

9.2.2 Bus Interface

The RTC function is mapped to I/O locations 70h (index) and 71h (data). This decode is done internal to the PC87303.

9.2.3 Time Generation

The Time Generation function divides the 32.768 kHz from the external clock pins (X1C, X2C) down to a one Hertz signal. The divider chain is controlled by bits 6–4 of Control Register A. Bits 3–0 of Control Register A select one of fifteen taps from the divider chain to be used as a Periodic Interrupt. See Control Register A in the Control Register and Interrupt section for divider configurations and rate selections.

During divider reset (bits 6–4 of Control Register A = 11x), the divider chain is reset to 0. An update will occur 500 ms after the divider chain is activated into normal operational mode (bits 6–4 of Control Register A = 010). The periodic flag also becomes active 1/2 of the programmed value when the divider chain is activated.

Figure 9-13 represents the internal and external circuitry that comprise the oscillator. The oscillator input may be driven from an external source. If this is desired, the input should be driven rail to rail and be approximately a 50% duty cycle. The oscillator output should be open in this case. The external capacitor values should be chosen to provide the manufacturer's specified load capacitance for the crystal when combined with the parasitic capacitance of the trace, socket, and package, which can vary from 0 pF to 8 pF. The rule of thumb in choosing these capacitors is:

$$C_L = (C1 * C2)/(C1 + C2) + C_{parasitic}$$

$$C2 > C1$$

C1 can be trimmed to obtain the 32768.0 Hz.

TABLE 9-2. RTC Memory Map

Index	Function	BCD Format	Binary Format	Comments
(RAMSEL = 0)				
00	Seconds	00–59	00–3b	R/W
01	Seconds Alarm	00–59	00–3b	R/W
02	Minutes	00–59	00–3b	R/W
03	Minutes Alarm	00–59	00–3b	R/W
04	Hours	12 hr. = 01–12 (AM)	01–0c (AM)	R/W
		12 hr. = 81–92 (PM)	81–8c (PM)	R/W
		24 hr. = 00–23	00–17	R/W
05	Hours Alarm	12 hr. = 01–12 (AM)	01–0c (AM)	R/W
		12 hr. = 81–92 (PM)	81–8c (PM)	R/W
		24 hr. = 00–23	00–17	R/W
06	Day of Week	01–07	01–07 (Sunday = 1)	R/W
07	Date of Month	01–31	01–1f	R/W
08	Month	01–12	01–0c	R/W
09	Year	00–99	00–63	R/W
0A	Control Register A			R/W (Bit 7 is Read Only)
0B	Control Register B			R/W (Bit 3 is Read Only)
0C	Control Register C			R
0D	Control Register D			R
0E–7F	Battery-Backed RAM (114 Bytes)			R/W
(RAMSEL = 1)				
00–7F	Battery-Backed RAM (128 Bytes)			R/W

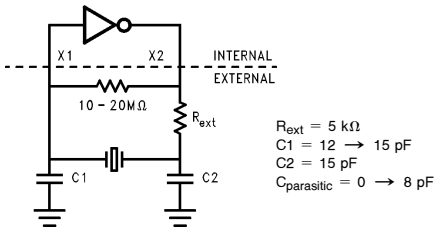

TL/C/12074–49

FIGURE 9-13. Oscillator Internal and External Circuitry

The start-up time of this oscillator may vary from two to seven seconds and is due to the high "Q" of the crystal. The parameters below describe the crystal to be used:

Parallel Resonant, tuning fork (N cut) or XY Bar

Q > 35k

Load Capacitance (C_L)	9 pF to 13 pF
Accuracy	User Choice
Temperature Coefficient	User Choice

9.2.4 Time Keeping

The time is kept in BCD or binary format. The format is determined by bit 2 of Control Register B (DM). Either 12 or 24 hour representation for the hours can be maintained as determined by bit 1 of Control Register B (24/12). Note that when changing the format the time registers must be re-initialized to the corresponding data format.

Daylight savings and leap year exceptions are handled by the time keeping function. When bit 0 of Control Register A (DSE) is a "1", time advances from 1:59:59 AM to 3:00:00 on the first Sunday in April. On the last Sunday of October time changes from 1:59:59 to 1:00:00 when daylight savings is enabled. On leap year February is extended to 29 days.

The time is updated once per second. If a read of the timing registers coincides with an update, data read may not be valid. Also, writes to time registers during an update have undefined results.

To avoid accessing invalid data, the RTC in the PC87303 provides a user copy of the time registers. Then four methods are available for reading and writing time to ensure that the correct time is written or read. They are as follows:

Method 1—Set the SET bit. (CRB7)

Set the SET bit to 1. This takes a snapshot of the internal time registers and loads it into the user copy. Then when the SET bit is written with 0, the user copy will update the internal registers.

Method 2—Access after detection of an Update Ended Interrupt.

This interrupt indicates that an update has just completed and the next update will occur after 999 ms.

Method 3—Poll update-in-progress (bit 7 in Control Register A).

The update occurs 244 μs after the update-in-progress bit goes high. Therefore if a 0 is read, there is a minimum of 244 μs in which the time is guaranteed to remain stable.

Method 4—Use a Periodic interrupt to determine if an update cycle is in progress.

The periodic interrupt is first set to a desired period. The program can then use the periodic interrupt to signify that there is (Periodic Interrupt/2 + 244 μs) remaining until another update occurs.

The Alarm condition is also generated by the Time Keeping function. After each update, the seconds, minutes, and hours are compared with the seconds alarm, minutes alarm, and hours alarm. If equal, the Alarm lag is set in Control

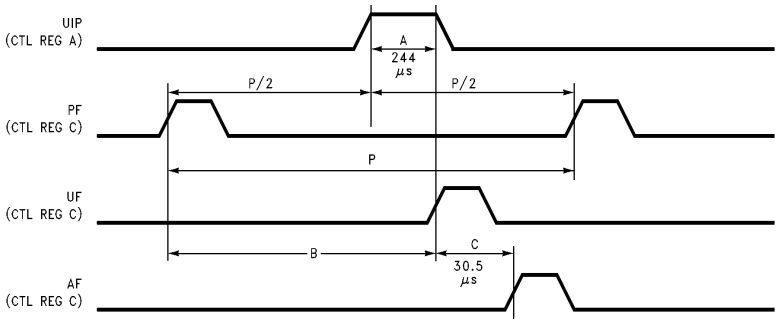

TL/C/12074–52

where:

UIP = Update In Progress Bit

UF = Update Ended Flag (Update Ended Interrupt if Enabled)

PF = Periodic Flag (Periodic Interrupt if Enabled)

AF = Alarm Flag (Alarm Interrupt if Enabled)

Flags (and IRQ) are reset at the conclusion of Control Register C read or by $\overline{\text{RESETC}}$ low.

A = Update in Progress Bit High before Update Occurs = 244 μs

B = Periodic interrupt to Update = P/2 + 244 μs

C = Update to Alarm Interrupt = 30.5 μs

P = Period is programmed by RS3–0 of control Register A.

FIGURE 9-14. Interrupt/Status Timing

Register C. This causes an interrupt condition (IRQZ = 0) if the Alarm Interrupt Enable bit is set in Control Register B. If both bit 7 and bit 6 of any alarm byte (seconds alarm, minutes alarm, hours alarm) are 1, then that alarm byte is a ''don't care''.

9.2.5 RAM

The RAM data is accessed at locations 0E–7F when RAMSEL (bit 2) of the configuration registers is 0, and locations 00–7F when RAMSEL is 1. Battery backed power enables the RAM to retain information during system power-down.

9.2.6 Power Management

The Power Management function provides power to the RTC in the PC87303. During system operation, power from the system is used. When system voltage falls below battery voltage, the Power Management function switches the RTC cell to battery power. For proper operation, a 500 mV differential is needed between V_{CC} and V_{BAT}. *Figure 9-15* represents a typical battery configuration and *Figure 9-16* represents typical battery current during battery backed mode.

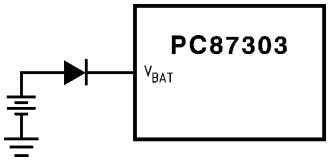

TL/C/12074–50

FIGURE 9-15. Typical Battery Configuration

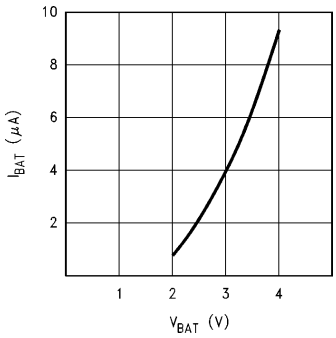

TL/C/12074–51

FIGURE 9-16. Typical Battery Current during Battery Backed Mode

9.2.7 System Bus Lock Out and Power-Up Detection

As the RTC switches to battery power all inputs are locked out so that the internal registers can not be modified. This lockout condition continues for 62 ms (min) to 125 ms (max) after the RTC switches from battery power to system power. The 62 ms–125 ms lockout during power transition from battery to system power depends on the following conditions:

1. If the Divider Chain Control (bits 6–4 in Control Register A) is in any mode but Normal Operation (010), all inputs are enabled immediately upon detection of system voltage above that of battery voltage.
2. When Battery voltage is below 1V and MR is 1, all inputs are enabled immediately upon detection of system voltage above that of battery voltage. This also initializes registers 00 through 0D to 00.
3. If the VRT bit (bit 7 in Control Register D) is 0, all inputs are enabled immediately upon detection of system voltage above that of battery voltage.

9.2.8 Oscillator

When power is applied to the RTC in the PC87303, the Oscillator is operational with the following exceptions:

1. The VRT bit (bit 7 in Control Register D) is a 0. The oscillator is disabled after initial power-up. This reduces power consumption during the time between when the battery is initially installed and when the RTC is initialized for timekeeping.
2. The Divider Chain Control (bits 6–4 in Control Register A) is in Oscillator Disabled modes (000 and 001). This provides a means for the user to ''shut-down'' the oscillator and reduce the power consumption of the RTC cell. The RAM remains functional when the oscillator is disabled.

9.2.9 Interrupt Handling

The Periodic, Alarm, and Update ended Interrupts are generated (IRQZ is driven low) when the respective enable bits in Control Register B are set and an interrupt condition occurs. A read from Register C clears the active interrupt. If a second interrupt condition occurs (other than that which caused the interrupt) during a read from Register C, IRQZ remains active (low). Thus, it is recommended that when multiple interrupts are enabled, the interrupt service routine continues to read (and service interrupts) until bit 7 of Control Register C (IRQ Flag) returns to a 1. Note that if an interrupt is not serviced before a second condition of the same interrupt occurs, the second interrupt event is lost.

9.2.10 Control Registers

The four Control Registers used to configure timing interrupts can be accessed at any time during non-battery backed operation. These Control Registers are located at addresses 0Ah, 0Bh, 0Ch and 0Dh. Their descriptions follow.

Control Register A

	UIP	DV2	DV1	DV0	RS3	RS2	RS1	RS0
bit	7	6	5	4	3	2	1	0

Bits 0–3 RS3–0—Periodic Interrupt Rate Select

(Read/Write)

These bits control the rate of the periodic interrupt. Reset has no effect on these bits.

RS3–0	Periodic Interrupt Rate	
0000	None	
0001	3.90625	ms
0010	7.8125	ms
0011	122.070	μs
0100	244.141	μs
0101	488.281	μs
0110	976.562	μs
0111	1.953125	ms
1000	3.90625	ms
1001	7.8125	ms
1010	15.625	ms
1011	31.25	ms
1100	62.5	ms
1101	125	ms
1110	250	ms
1111	500	ms

Bits 4–6 DV2–0—Divider Chain Control

(Read/Write)

These bits control the configuration of the divider chain in the Timing Generation function.

Reset has no effect on these bits.

DV2–0	Divider Chain Configuration
000	Oscillator Disabled
001	Oscillator Disabled
010	Normal Operation
011	TEST
100	TEST
101	TEST
110	Divider Chain RESET
111	Divider Chain RESET

Bit 7 UIP—Update in Progress

(Read Only)

1: Signifies that the timing registers will be updated within 244 μs.

0: Signifies that an update will not occur before 244 μs. This bit reads 0 when bit 7 of Control Register B (SET) is a 1.

Reset has no effect on this bit.

Control Register B

	SET	PIE	AIE	UIE	0	DM	24/12	DSE
bit	7	6	5	4	3	2	1	0

Bit 0 DSE—Daylight Savings Enable

(Read/Write)

1: Enables daylight savings. Two conditions apply as follows:

Daylight Savings Spring: Time advances from 1:59:59 to 3:00:00 on the first Sunday in April.

Daylight Savings Fall: Time advances from 1:59:59 to 1:00:00 on the last Sunday in October.

0: Disables the daylight savings feature.

Reset has no effect on this bit.

Bit 1 24/12—24 or 12 Hour Mode

(Read/Write)

1: Enables 24 hour format.

0: Enables 12 hour format.

Reset has no effect on this bit.

Bit 2 **DM—Data Mode**

(Read/Write)

1: Enables BINARY format.

0: Enables BCD format.

Reset has no effect on this bit.

Bit 3 This bit is defined as ''Square Wave Enable'' by the MC146818 and is not supported by the RTC Cell. This bit is always read as 0.

Bit 4 **UIE—Update Ended Interrupt Enable**

(Read/Write)

1: Enables generation of the Update Ended interrupt. This interrupt is generated at the time an update occurs.

0: Disables generation of the Update Ended interrupt. Reset forces this bit to 0.

Bit 5 **AIE—Alarm Interrupt Enable**

(Read/Write)

1: Enables generation of the Alarm interrupt. The Alarm interrupt is generated immediately after a time update in which the Seconds, Minutes, and Hours time matches with their respective alarm counterparts.

0: Disables generation of the alarm interrupt.

Reset forces this bit to 0.

Bit 6 **PIE—Periodic Interrupt Enable**

(Read/Write)

1: Enables generation of the Periodic interrupt. Bits 3–0 of Control Register A determine the rate of the Periodic interrupt.

0: Disables generation of the Periodic interrupt.

Reset forces this bit to 0.

Bit 7 **SET—Set mode**

(Read/Write)

1: The user copy of time is ''frozen'' allowing the time registers to be accessed without regard for an occurrence of an update.

0: The timing updates occur normally.

Reset has no effect on this bit.

Control Register C

	IRQF	PF	AF	UF	0	0	0	0
bit	7	6	5	4	3	2	1	0

Bits 0–3 **Reserved**

(Always 0)

Bit 4 **UF—Update Ended Interrupt Flag**

(Read Only)

1: When the time registers are updated. This bit is reset to 0 at the conclusion of a read from this register. Reset forces this bit to 0.

Bit 5 **AF—Alarm Interrupt Flag**

(Read Only)

1: When an alarm condition is detected. This bit is reset to 0 at the conclusion of a read from this register. Reset forces this bit to 0.

Bit 6 **PF—Periodic Interrupt Flag**

(Read Only)

1: When a transition occurs on the selected tap of the divider chain. This bit is reset to 0 at the conclusion of a read from this register. Reset forces this bit to 0.

Bit 7 **IRQF—Interrupt Request Flag**

(Read Only)

1: When bit pairs PIE and PF; AIE and AF, and UIE and UF all equal 1. The IRQF bit mirrors the value on the IRQZ output. When IRQZ is active (low), IRQF is 1. Reset forces this bit to 0.

Control Register D

	VRT	0	0	0	0	0	0	0
bit	7	6	5	4	3	2	1	0

Bits 0–6 **Reserved**

(Always 0)

Bit 7 **VRT—Valid RAM and Time**

(Read Only)

1: This bit indicates that the contents of the RTC are valid.

0: This bit indicates that the battery source is low and that the RTC data and RAM data are questionable. This bit is set to 1 at the conclusion of a read from this register.

10.0 Electrical Characteristics

ABSOLUTE MAXIMUM RATINGS (Notes 1 and 2)

If Military/Aerospace specified devices are required, please contact the National Semiconductor Sales Office/Distributors for availability and specifications.

Supply Voltage (V_{DD}, V_{DDA})	−0.5V to +7.0V
Supply Differential ($\|V_{DD}-V_{DDA}\|$)	0.6V
Input Voltage (V_I)	−0.5V to V_{DD} + 0.5V
Output Voltage (V_O)	−0.5V to V_{DD} + 0.5V
Storage Temperature (T_{STG})	−65°C to +165°C
Power Dissipation (P_D)	1W
Lead Temperature (T_L) (Soldering, 10 seconds)	260°C

Note 1: Absolute Maximum Ratings are those values beyond which damage to the device may occur.

Note 2: Unless otherwise specified, all voltages are referenced to ground.

RECOMMENDED OPERATING CONDITIONS

Supply Voltage (V_{DD})	4.5V−5.5V
Operating Temp. Range (T_A)	0°C to +70°C
ESD Tolerance	1500V
C_{ZAP} = 100 pF (Note 3)	
R_{ZAP} = 1.5 kΩ (Note 3)	

Note 3: Value based on test complying with NSC SOP5-028 human body model ESD testing using the ETS-910 tester.

CAPACITANCE T_A = 25°C, f = 1 MHz

Symbol	Parameter	Min	Typ	Max	Units
C_{IN}	Input Pin Capacitance		5	7	pF
C_{IN1}	Clock Input Capacitance		8	10	pF
C_{IO}	I/O Pin Capacitance		10	12	pF
C_O	Output Pin Capacitance		6	8	pF

10.1 DC ELECTRICAL CHARACTERISTICS Under Recommended Operating Conditions

Symbol	Parameter	Conditions	Min	Typ	Max	Units
V_{IH}	Input High Voltage		2.0		V_{DD}	V
V_{IL}	Input Low Voltage		−0.5		0.8	mA
I_{CC}	V_{DD} Average Supply Current	V_{IL} = 0.5V V_{IH} = 2.4V No Load		25	40	mA
I_{CCSB}	V_{DD} Quiescent Supply Current in Low Power Mode	V_{IL} = V_{SS} V_{IH} = V_{DD} No Load		0.8	1.2	mA
I_{CCA}	V_{DDA} Average Supply Current	V_I = 0.5V V_{IH} = 2.4V No Load		7	10	mA
I_{CCASB}	V_{DDA} Quiescent Supply Current in Low Power Mode	V_{IL} = V_{SS} V_{IH} = V_{DD} No Load		5	500	μA
I_{IL}	Input Leakage Current (Note 4)	V_{IN} = V_{DD}			10	μA
		V_{IN} = V_{SS}			−10	μA

Note 4: During reset the MFM pin is rated for 10 μA; −150 μA leakage is due to an internal pull-up resistor. The $\overline{RTS1, 2}$; SOUT1, 2; $\overline{DTR1, 2}$; $\overline{HCS0, 1}$; $\overline{IDEHI}$; $\overline{VLD0, 1}$ and $\overline{IDEHLO}$ are rated for 100 μA; −10 μA leakage is due to internal pull-down resistors. During normal operation the BUSY, PE, and SLCT pins are rated for 100 μA; −10 μA leakage is due to internal pull down resistors. The $\overline{ACK}$ and $\overline{ERR}$ pins are rated for 10 μA; −100 μA leakage is due to internal pull-up resistors.

10.0 Electrical Characteristics (Continued)

10.1 DC ELECTRICAL CHARACTERISTICS (Continued)

10.1.1 Microprocessor, Parallel Port, and IDE Interface Pins

Symbol	Parameter	Conditions	Min	Max	Units
V_{OH}	Output High Voltage	$I_{OH} = -15$ mA on: D0–7, IDED7, IRQ3–7, DRQ ADRATE0 $I_{OH} = -6$ mA on: $\overline{DTR}$, $\overline{RTS}$, SOUT, MFM, DRATE, $\overline{CSOUT}$, $\overline{IDEHI}$, $\overline{IDELO}$, $\overline{HCS}$, $\overline{CS0}$, $\overline{CS1}$	2.4		V
V_{OL}	Output Low Voltage	$I_{OL} = 24$ mA on: D0–7, IDED7, IRQ3–7, IRQ8, DRQ, $\overline{ZWS}$, IOCHRDY, MFM, ADRATE0 $I_{OL} = 12$ mA on: $\overline{DTR}$, $\overline{RTS}$, SOUT, $\overline{HCS}$, $\overline{IDEHI}$, $\overline{IDELO}$ $I_{OL} = 6$ mA on: DRATE, $\overline{CSOUT}$, $\overline{CS0}$, $\overline{CS1}$		0.4	V
I_{OZ}	Output TRI-STATE Leakage Current (D7–D0, IRQ3–7, DRQ)	$V_{IN} = V_{DD}$		50	μA
		$V_{IN} = V_{SS}$		−50	μA

Note 1: Pins IOCHRDY and $\overline{ZWS}$ are open drain pins.

10.1.2 Disk Interface Pins

Symbol	Parameter	Conditions	Min	Typ	Max	Units
V_H	Input Hysteresis			250		mV
V_{OH}	Output High Voltage (Note 1)	$I_{OH} = -4$ mA	2.4			V
V_{OL}	Output Low Voltage	$I_{OL} = 40$ mA			0.4	V
I_{LKG}	Output High Leakage Current (Note 1)	$V_{IN} = V_{DD}$			10	μA
		$V_{IN} = V_{SS}$			−10	μA

Note 1: V_{OH} and I_{LKG} for the disk interface pins are valid for CMOS buffered outputs only.

10.1.3 Oscillator Pins (X1/OSC)

Symbol	Parameter	Conditions	Min	Typ	Max	Units
V_{IH}	X1 Input High Voltage		2.0			V
V_{IL}	X2 Input Low Voltage				0.4	V
IXLKG	X1 Leakage	$V_{IN} = V_{DD}$			400	μA
		$V_{IN} = V_{SS}$			−400	μA

10.1.4 Parallel Port Pins

Symbol	Parameter	Conditions	Min	Typ	Max	Units
I_{OH}	High Level Output Current (Note 1)	$V_{OH} = 2.4$V		12		mA
I_{OL}	Low Level Output Current	$V_{OL} = 0.4$V		12		mA

Note 1: $\overline{AFD}$, $\overline{INIT}$, $\overline{SLIN}$ and $\overline{STB}$ are open drain pins when the PC87303 parallel port is operating in one of the following modes: Compatible, Extended, EPP1.7, ECP mode 0, or ECP mode 2 if PCR1 if 0. 4.7 kΩ resistors should be used.

10.0 Electrical Characteristics (Continued)

10.1.5 Keyboard Controller and Real-Time Clock Pins 0°C–70°C

Symbol	Parameter	Conditions	Min	Max	Units
V_{OH}	Minimum High Level Output Voltage P10–P17, P20–P27 (Note 1)	$V_{IN} = V_{IH}$ or V_{IL} $I_{OH} = -2.0$ mA	2.4		V
	All other push-pull outputs KBCLK, KBDAT, MCLK, MDAT (Note 2)	$I_{OH} = -4.0$ mA	2.4		V
V_{OL}	Maximum Low Level Output Voltage P10–P17, P20–P27	$V_{IN} = V_{IH}$ or V_{IL} $I_{OL} = 2.0$ mA		0.4	V
	KBDAT, KBCLK, MCLK, MDAT	$I_{OL} = 16.0$ mA		0.4	V
	All Other Outputs	$I_{OL} = 4.0$ mA		0.4	V
I_{IN}	Maximum Input Current **Inputs only:** A0–A9, AEN, $\overline{CS}$, $\overline{IOR}$, $\overline{IOW}$, PWRGOOD T0, T1	$V_{IN} = V_{CC}$ or V_{SS}		10	μA
	I/Os only: D0–D7			10	μA
	I/Os with Resistors: P10–P17, P20–P27, SYNC	$V_{IN} = V_{CC}$		10	μA
		$V_{IN} = V_{IL}$		400	μA
I_{BAT}	V_{BAT} Maximum Quiescent Supply Current	$V_{BAT} = 3.0$V $V_{IN} = V_{CC} = V_{SS} = 0$V Real-Time Clock f = 32.768 kHz		8	μA
	Input Leakage	$V_{CC} = 5.0$V, $V_{BAT} = 3.0$V		0.4	μA
V_{BAT}	Battery Voltage		2.4	$V_{CC} - 0.5$	V

Note 1: I_{OH} is driven for 10 ns on switch from low to high.

Note 2: KBCLK, KBDAT, MCLK and MDAT are open drain outputs with 10k minimum pull-up resistors.

10.2 AC ELECTRICAL CHARACTERISTICS

10.2.1 A.C. Test Conditions $T_A = 0°C$ to $+70°C$, $V_{DD} = 5.0V \pm 10\%$

LOAD CIRCUIT (Notes 1, 2, 3)

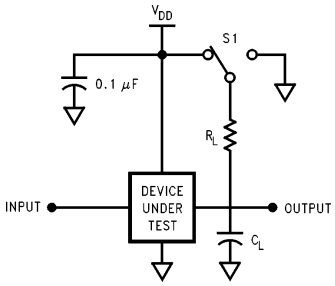

TL/C/12074–53

AC TESTING INPUT, OUTPUT WAVEFORM

TL/C/12074–54

Note 1: $C_L = 100$ pF, includes jig and scope capacitance.

Note 2: S_1 = Open for push-pull outputs. $S_1 = V_{DD}$ for high impedance to active low and active low to high impedance measurements. S_1 = GND for high impedance to active high and active high to high impedance measurements. $R_L = 1.0$ kΩ for μP interface pins.

Note 3: For the FDC Open Drive Interface Pins $S_1 = V_{DD}$ and $R_L = 150\Omega$.

10.0 Electrical Characteristics (Continued)

10.2.2 Clock Timing

Symbol	Parameter	Min	Max	Units
t_{CH}	Clock High Pulse Width	16		ns
t_{CL}	Clock Low Pulse Width	16		ns
t_{CP}	Clock Period	40	43	ns
t_{ICP}	Internal Clock Period	(Table 10-1)		ns
t_{DRP}	Data Rate Period	(Table 10-1)		ns

TABLE 10-1 Nominal t_{ICP}, t_{DRP} Values

MFM Data Rate	t_{DRP}	t_{ICP}	Value	Units
1 Mbps	1000	3 x t_{CP}	125	ns
500 kbps	2000	3 x t_{CP}	125	ns
300 kbps	3333	5 x t_{CP}	208	ns
250 kbps	4000	6 x t_{CP}	250	ns

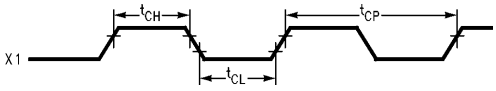

TL/C/12074–55

FIGURE 10-1. Clock Timing

10.0 Electrical Characteristics (Continued)

10.2.3 Microprocessor Interface Timing

Symbol	Parameter	Min	Max	Units
t_{AR}	Valid Address to Read Active	18		ns
t_{AW}	Valid Address to Write Active	18		ns
t_{DH}	Data Hold	0		ns
t_{DS}	Data Setup	18		ns
t_{HZ}	Read to Floating Data Bus	13	25	ns
t_{PS}	Port Setup	10		ns
t_{RA}	Address Hold from Inactive Read	0		ns
t_{RCU}	Read Cycle Update	45		ns
t_{RD}	Read Strobe Width	60		ns
t_{RDH}	Read Data Hold	10		ns
t_{RI}	Read Strobe to Clear IRQ6		55	ns
t_{RVD}	Active Read to Valid Data		55	ns
t_{WA}	Address Hold from Inactive Write	0		ns
t_{WCU}	Write Cycle Update	45		ns
t_{WI}	Write Strobe to Clear IRQ6		55	ns
t_{WO}	Write Data to Port Update		60	ns
t_{WR}	Write Strobe Width	60		ns
RC	Read Cycle $= t_{AR} + t_{RD} + t_{RCU}$	123		ns
WC	Write Cycle $= t_{AW} + t_{WR} + t_{WCU}$	123		ns
t_{WRR}	$\overline{RD}$ Low after $\overline{WR}$ High	80		ns

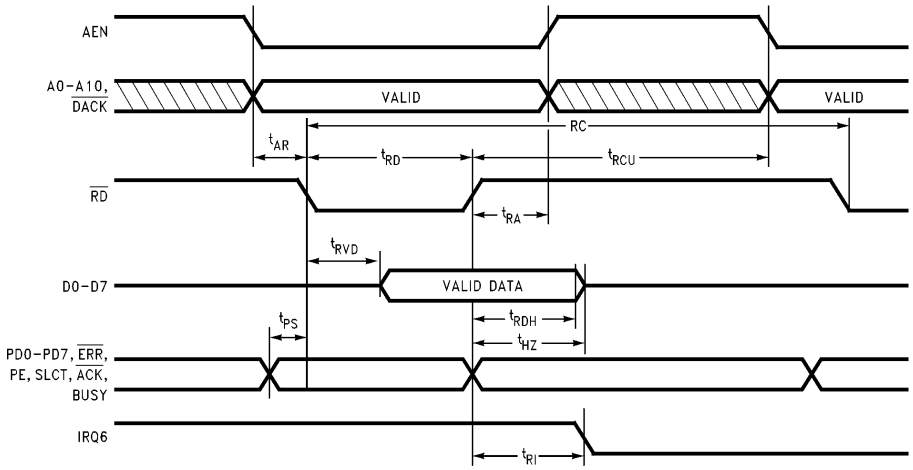

TL/C/12074–56

FIGURE 10-2. Microprocessor Read Timing

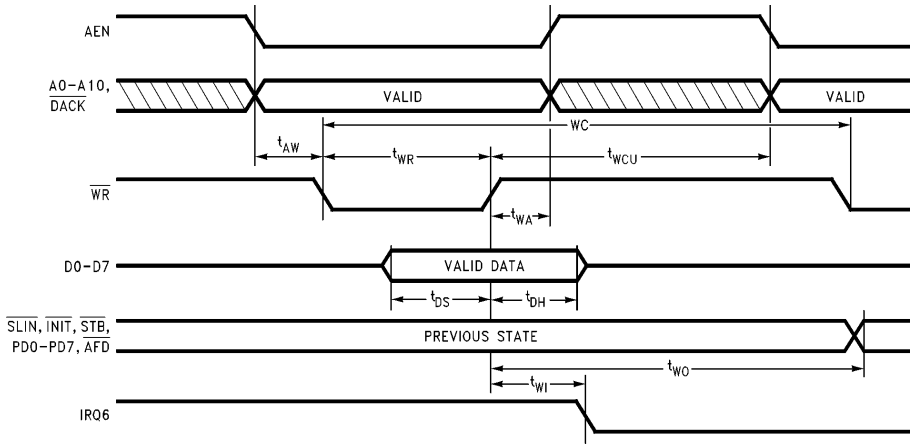

TL/C/12074–57

FIGURE 10-3. Microprocessor Write Timing

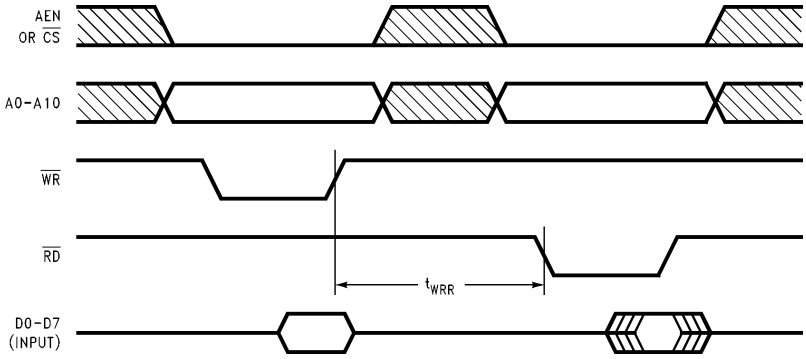

TL/C/12074–60

FIGURE 10-4. Read After Write Operation to All Registers and RAM Timing

10.0 Electrical Characteristics (Continued)

10.2.4 Baud Out Timing

Symbol	Parameter	Conditions	Min	Max	Units
N	Baud Divisor		1	65535	ns
t_{BHD}	Baud Output Positive Edge Delay	CLK = 24 MHz/2, 100 pF Load		56	ns
t_{BLD}	Baud Output Negative Edge Delay	CLK = 24 MHz/2, 100 pF Load		56	ns

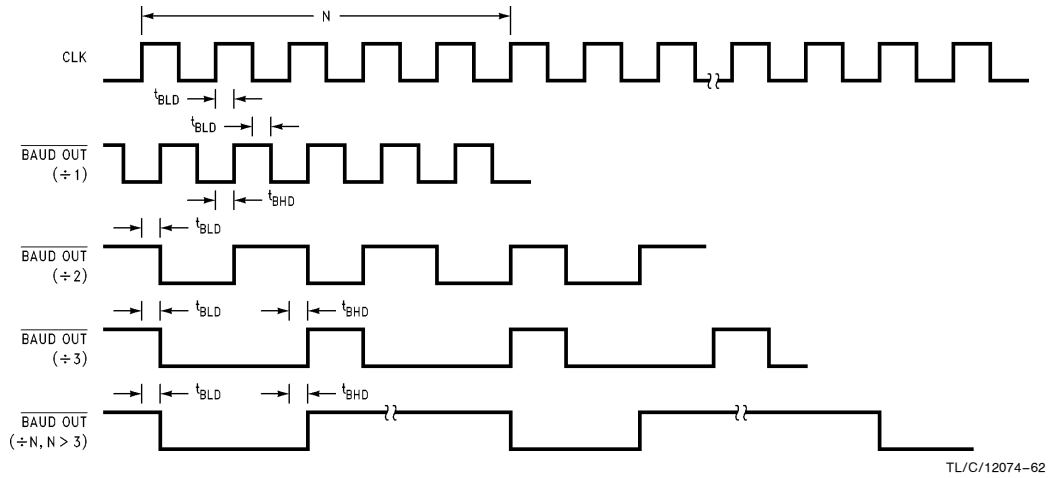

FIGURE 10-5. Baud Out Timing

10.2.5 Transmitter Timing

Symbol	Parameter	Min	Max	Units
t_{HR}	Delay from $\overline{WR}$ (WR THR) to Reset IRQ		40	ns
t_{IR}	Delay from $\overline{RD}$ (RD IIR) to Reset IRQ (THRE)		55	ns
t_{IRS}	Delay from Initial IRQ Reset to Transmit Start	8	24	Baud Out Cycles
t_{SI}	Delay from Initial Write to IRQ	16	24	Baud Out Cycles
t_{STI}	Delay from Start Bit to IRQ (THRE)		8	Baud Out Cycles

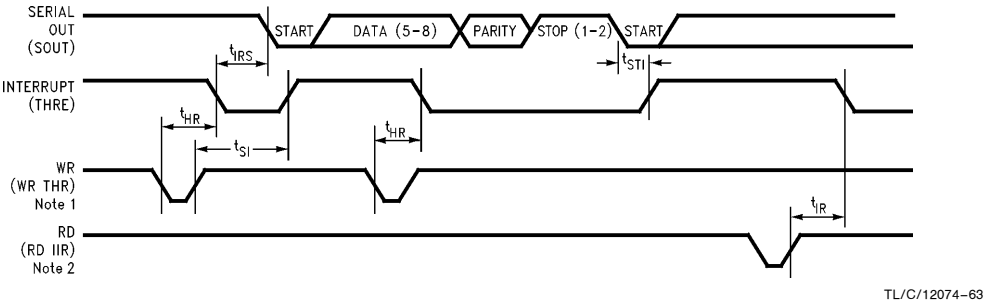

Note 1: See Microprocessor Write cycle timing, *Figure 10-3*.

Note 2: See Microprocessor Read cycle timing, *Figure 10-2*.

FIGURE 10-6. Transmitter Timing

10.0 Electrical Characteristics (Continued)

10.2.6 Receiver Timing

Symbol	Parameter	Conditions	Min	Max	Units
t_{RAI}	Delay from Active Edge of $\overline{RD}$ to Reset IRQ			78	ns
t_{RINT}	Delay from Inactive Edge of $\overline{RD}$ (RD LSR) to Reset IRQ			55	ns
t_{SCD}	Delay from RCLK to Sample Time	(Note 1)		41	ns
t_{SINT}	Delay from Stop Bit to Set Interrupt			2	Baud Out Cycle

Note 1: This is an internal timing specification and is therefore not tested.

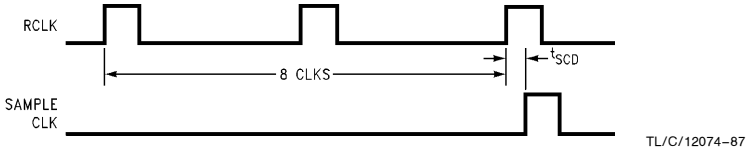

FIGURE 10-7. Sample Clock Timing

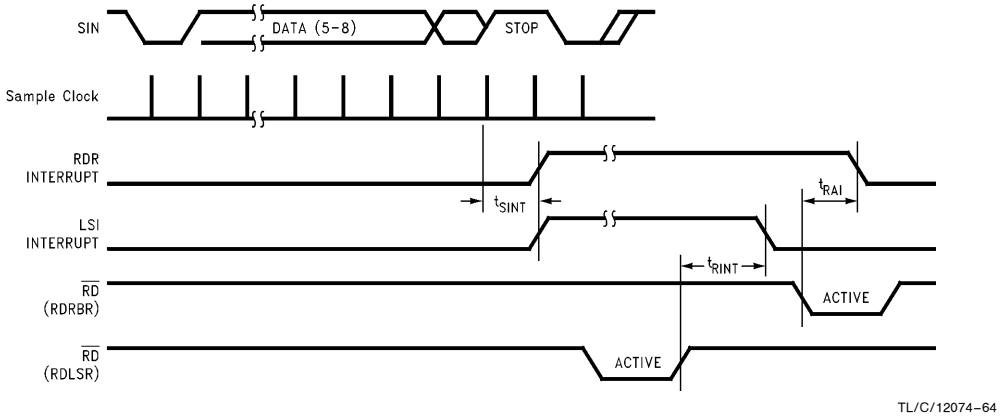

FIGURE 10-8. Receiver Timing

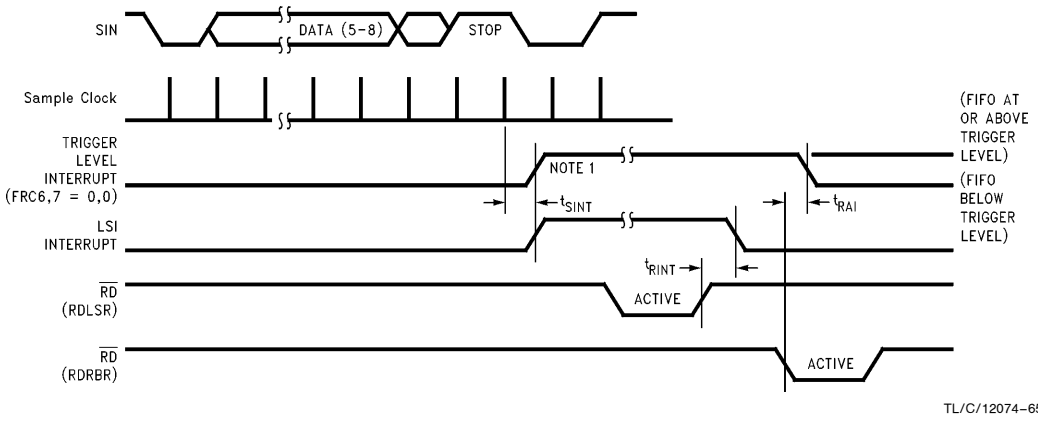

Note 1: If SCR0 = 1, then t_{SINT} = 3 RCLKs. For a Timeout Interrupt, t_{SINT} = 8 RCLKs.

FIGURE 10-9. FIFO Mode Receiver Timing

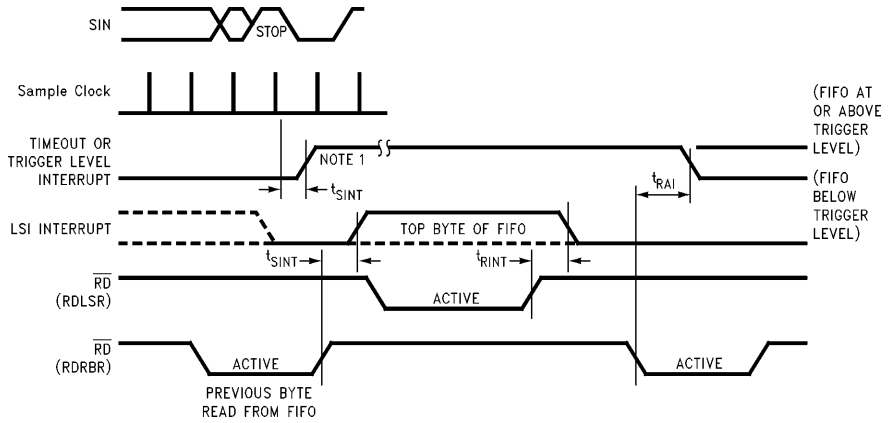

TL/C/12074–66

Note 1: If SCR0 = 1, then t_{SINT} = 3 RCLKs. For a Timeout Interrupt, t_{SINT} = 8 RCLKs.

FIGURE 10-10. Timeout Receiver Timing

10.2.7 MODEM Control Timing

Symbol	Parameter	Conditions	Min	Max	Units
t_{MDO}	Delay from $\overline{WR}$ (WR MCR) to Output			40	ns
t_{RIM}	Delay to Reset IRQ from $\overline{RD}$ (RD MSR)			78	ns
t_{SIM}	Delay to Set IRQ from MODEM Input			40	ns

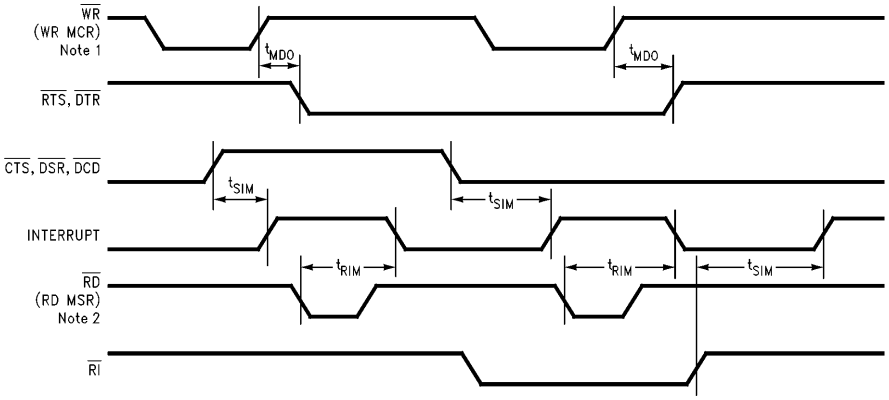

TL/C/12074–67

Note 1: See Microprocessor Write cycle timing, *Figure 10-3*.

Note 2: See Microprocessor Read cycle timing, *Figure 10-2*.

FIGURE 10-11. MODEM Control Timing

10.0 Electrical Characteristics (Continued)

10.2.8 DMA Timing

10.2.8.1 FDC

Symbol	Parameter	Min	Max	Units
t_{KI}	$\overline{FDACK}$ Inactive Pulse Width	25		ns
t_{KK}	$\overline{FDACK}$ Active Pulse Width	65		ns
t_{KQ}	$\overline{FDACK}$ Active Edge to FDRQ Inactive		65	ns
t_{QK}	FDRQ to $\overline{FDACK}$ Active Edge	10		ns
t_{QP}	FDRQ Period (except Non-Burst DMA) (Note 3)	8 x t_{DRP}		μs
t_{QQ}	FDRQ Inactive Non-Burst Pulse Width	300	400	ns
t_{QR}	FDRQ to $\overline{RD}$ or $\overline{WR}$ Active	15		ns
t_{QW}	FDRQ to End of $\overline{RD}$, $\overline{WR}$ (Notes 2, 3) (FDRQ Service Time)		(8 x t_{DRP}) − (16 x t_{ICP})	μs
t_{QT}	FDRQ to TC Active (Notes 2, 3) (FDRQ Service Time)		(8 x t_{DRP}) − (16 x t_{ICP})	μs
t_{RQ}	$\overline{RD}$, $\overline{WR}$ Active Edge to FDRQ Inactive (Note 1)		65	ns
t_{TQ}	TC Active Edge to FDRQ Inactive		75	ns
t_{TT}	TC Active Pulse Width	50		ns

Note 1: The active edge of $\overline{RD}$ or $\overline{WR}$ and TC is recognized only when $\overline{FDACK}$ is active.

Note 2: Values shown are with the FIFO disabled, or with FIFO enabled and THRESH = 0. For nonzero values of THRESH, add (THRESH x 8 x t_{DRP}) to the values shown.

Note 3: t_{DRP} and t_{ICP} are defined in Table 10-1.

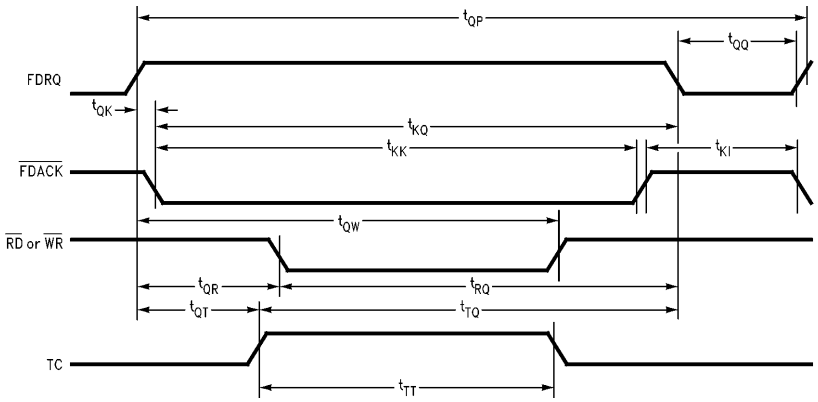

TL/C/12074–68

FIGURE 10-12a. FDC DMA Timing

10.0 Electrical Characteristics (Continued)

10.2.8.2 ECP

Symbol	Parameter	Min	Max	Units
t_{KIP}	$\overline{PDACK}$ Inactive Pulse Width	25		ns
t_{KKP}	$\overline{PDACK}$ Active Pulse Width	65		ns
t_{KQP}	$\overline{PDACK}$ Active Edge to PDRQ Inactive (Notes 2, 3)		65 + (6 x 32 x t_{CP})	ns
t_{QKP}	PDRQ to $\overline{PDACK}$ Active Edge	10		ns
t_{QPP}	PDRQ Period	330		μs
t_{QQP}	PDRQ Inactive Non-Burst Pulse Width	300	400	ns
t_{QRP}	PDRQ to $\overline{RD}$, $\overline{WR}$ Active	15		ns
t_{RQP}	$\overline{RD}$ or $\overline{WR}$ Active Edge to PDRQ Inactive (Note 1)		65	ns
t_{TQP}	TC Active Edge to PDRQ Inactive		75	ns
t_{TT}	TC Active Pulse Width	50		ns

Note 1: The active edge of $\overline{RD}$ or $\overline{WR}$ and TC is recognized only when $\overline{PDACK}$ is active.

Note 2: One DMA transaction takes six clock cycles.

Note 3: t_{CP} is defined in Section 10.2.2 Clock Timing.

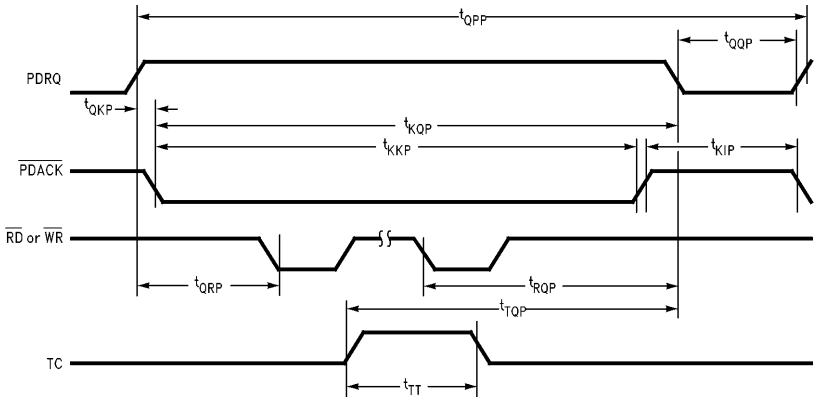

TL/C/12074–69

FIGURE 10-12b. ECP DMA Timing

10.0 Electrical Characteristics (Continued)

10.2.9 Reset Timing

Symbol	Parameter	Min	Max	Units
t_{RW}	Reset Width (Note 1)	22		μs
t_{SRC}	Reset to Control Inactive		300	ns

Note 1: The software reset pulse width is 100 ns.

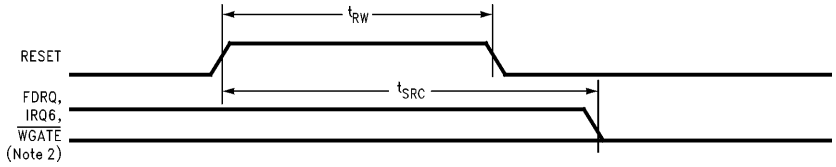

TL/C/12074–70

Note 2: DRQ and IRQ6 will be TRI-STATE after time t_{SRC} when in the PC-AT or Model 30 mode.

FIGURE 10-13. Reset Timing

10.2.10 FDC Write Data Timing

Symbol	Parameter	Min	Max	Units
t_{HDH}	$\overline{HDSEL}$ Hold from $\overline{WGATE}$ Inactive	750		μs
t_{HDS}	$\overline{HDSEL}$ Setup to $\overline{WGATE}$ Active	100		μs
t_{WDW}	Write Data Pulse Width	Table 10-2		ns

TABLE 10-2. Minimum t_{WDW} Values

Data Rate	t_{DRP}	t_{WDW}	t_{WDW} Value	Units
1 Mbps	1000	2 x t_{ICP}	250	ns
500 kbps	2000	2 x t_{ICP}	250	ns
300 kbps	3333	2 x t_{ICP}	375	ns
250 kbps	4000	2 x t_{ICP}	500	ns

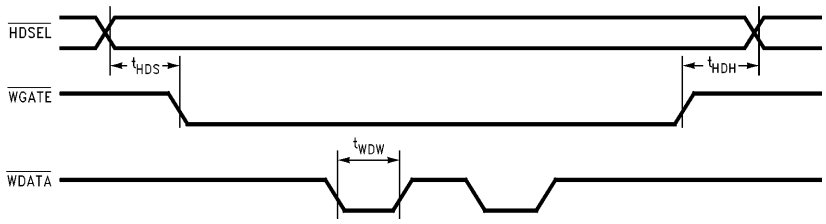

TL/C/12074–71

FIGURE 10-14. Write Data Timing

10.0 Electrical Characteristics (Continued)

10.2.11 FDC Read Data Timing

Symbol	Parameter	Min	Max	Units
t_{RDW}	Read Data Pulse Width	50		ns

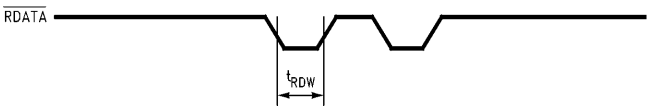

TL/C/12074–73

FIGURE 10-15. Read Data Timing

10.2.12 Drive Control Timing

Symbol	Parameter	Min	Max	Units
t_{DRV}	$\overline{DR0-3}$, $\overline{MTR0-3}$ from End of $\overline{WR}$		100	ns
t_{DST}	$\overline{DIR}$ Setup to $\overline{STEP}$ Active	6		μs
t_{IW}	Index Pulse Width	100		ns
t_{STD}	$\overline{DIR}$ Hold from $\overline{STEP}$ Inactive	t_{STR}		ms
t_{STP}	$\overline{STEP}$ Active High Pulse Width	8		μs
t_{STR}	$\overline{STEP}$ Rate Time (see Table 4-15)	1		ms

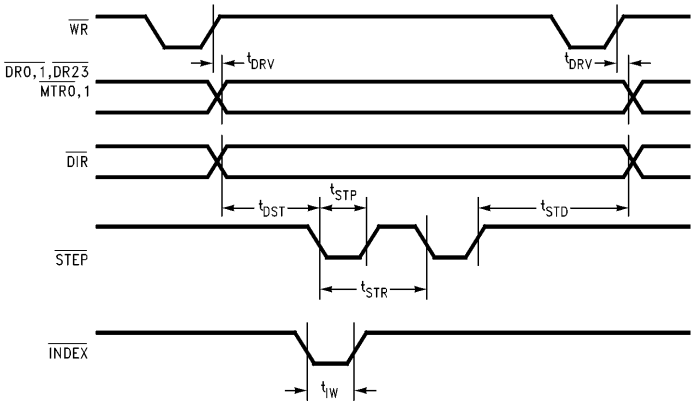

TL/C/12074–72

FIGURE 10-16. Drive Control Timing

10.2.13 IDE Timing

Symbol	Parameter	Min	Max	Units
t_{AD}	Delay from Address to Disable Strobe		25	ns
t_{AE}	Delay from Address to Enable Strobe		25	ns

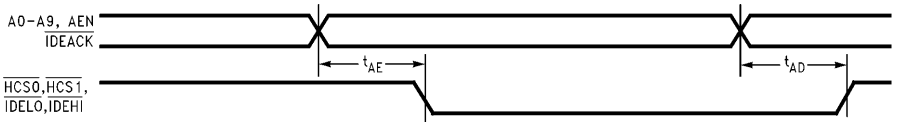

TL/C/12074–74

FIGURE 10-17. IDE Timing

10.0 Electrical Characteristics (Continued)

10.2.14 Parallel Port Timing

Symbol	Parameter	Conditions	Type	Max	Units
t_{PDH}	Port Data Hold	(Note 1)	500		ns
t_{PDS}	Port Data Setup	(Note 1)	500		ns
t_{PI}	Port Interrupt			33	ns
t_{SW}	Strobe Width	(Note 1)	500		ns

Note 1: These times are system dependent and are therefore not tested.

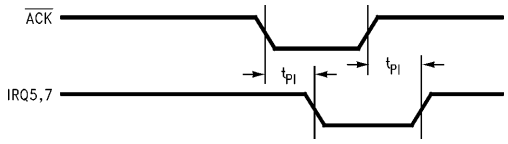

TL/C/12074–75

FIGURE 10-18. Compatible Mode Parallel Port Interrupt Timing

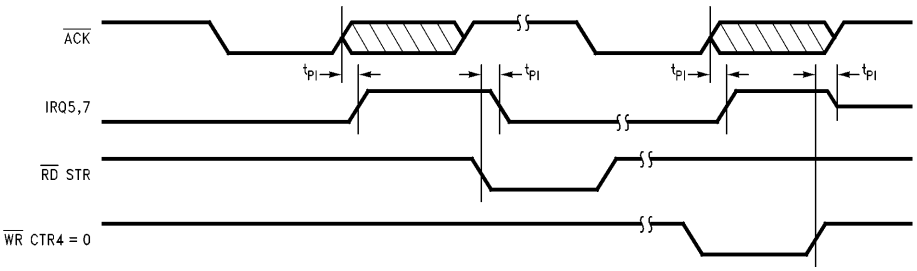

TL/C/12074–76

FIGURE 10-19. Extended Mode Parallel Port Interrupt Timing

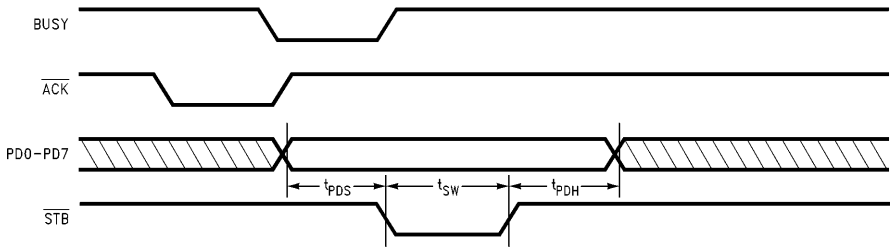

TL/C/12074–77

FIGURE 10-20. Typical Parallel Port Data Exchange

10.0 Electrical Characteristics (Continued)

10.2.15 Enhanced Parallel Port Timing

Symbol	Parameter	Conditions	Min	Max	Units
t_{WW}	$\overline{WRITE}$ Active from $\overline{WR}$ Active (Note 1)			45	ns
t_{WST}	$\overline{DSTRB}$ or $\overline{ASTRB}$ Active from $\overline{WR}$ Active (Notes 1, 2)	EEP 1.7		45	ns
		EPP 1.9		65	ns
t_{WEST}	$\overline{DSTRB}$ or $\overline{ASTRB}$ Active after $\overline{WRITE}$ Active	EPP 1.7	0		ns
		EPP 1.9	10		ns
t_{WPDh}	PD0–PD7 Hold after $\overline{DSTRB}$ or $\overline{ASTRB}$ Inactive		50		ns
t_{HRW}	IOCHRDY Active after $\overline{WAIT}$ Active (Note 3)	EPP 1.7		40	ns
t_{WPDS}	PD0–PD7 Valid after $\overline{WRITE}$ Active	D0–7 is stable 15 ns before $\overline{WR}$ Active		15	ns
t_{EPDW}			80		ns
t_{EPDh}			0		ns
t_{ZWSa}	$\overline{ZWS}$ Valid after $\overline{WR}$ or $\overline{RD}$ Active			45	ns
t_{ZWSh}	$\overline{ZWS}$ Hold after $\overline{WR}$ or $\overline{RD}$ Inactive		0		ns

Note 1: t_{WST} and t_{WW} are valid in EPP 1.9 only if $\overline{WAIT}$ is low when $\overline{WR}$ becomes active, else t_{WST} and t_{WW} are measured from $\overline{WAIT}$.

Note 2: The PC87303 design guarantees that $\overline{WRITE}$ will not change from low to high before $\overline{DSTRB}$ or $\overline{ASTRB}$ goes from low to high.

Note 3: In EPP 1.9, IOCHRDY is measured from $\overline{WR}$ or $\overline{RD}$.

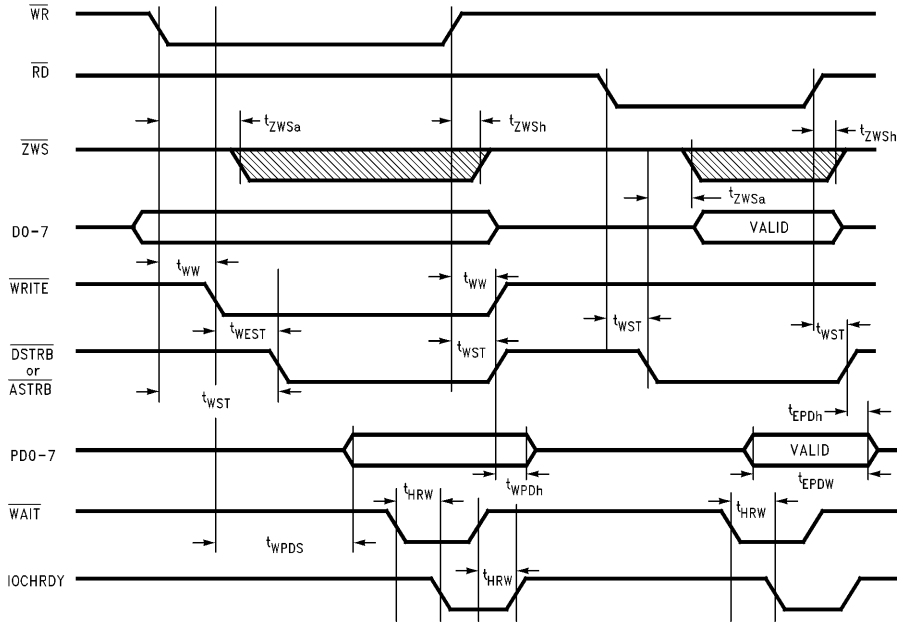

FIGURE 10-21. Enhanced Parallel Port Timing

10.0 Electrical Characteristics (Continued)

10.2.16 Extended Capabilities Port Timing

10.2.16.1 Forward

Symbol	Parameter	Conditions	Min	Max	Units
t_{ecdsf}	Data Setup before $\overline{STB}$ Active		0		ns
t_{ecdhf}	Data Hold after BUSY		0		ns
t_{eclhf}	BUSY Setup after $\overline{STB}$ Active		75		ns
t_{echhf}	$\overline{STB}$ Active after BUSY		0	1	sec
t_{echlf}	BUSY Setup after $\overline{STB}$ Inactive		0	35	ms
t_{ecllf}	$\overline{STB}$ Active after BUSY		0		ns

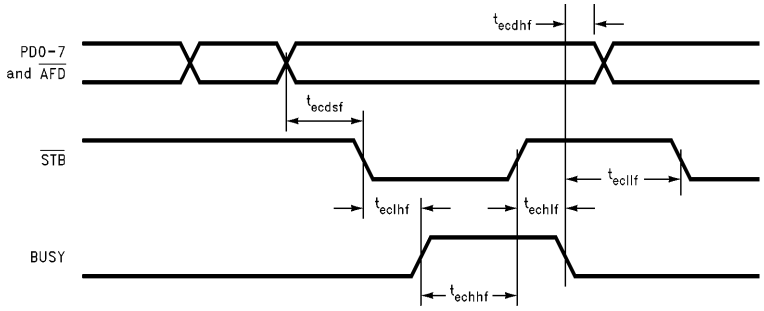

TL/C/12074–79

FIGURE 10-22. ECP Parallel Port Forward Timing Diagram

10.2.16.2 Backward

Symbol	Parameter	Conditions	Min	Max	Units
t_{ecdsb}	Data Setup before $\overline{STB}$ Active		0		ns
t_{ecdhb}	Data Hold after BUSY		0		ns
t_{eclhb}	BUSY Setup after $\overline{STB}$ Active		75		ns
t_{echhb}	$\overline{STB}$ Active after BUSY		0	1	sec
t_{echlb}	BUSY Setup after $\overline{STB}$ Inactive		0	35	ms
t_{ecllb}	$\overline{STB}$ Active after BUSY		0		ns

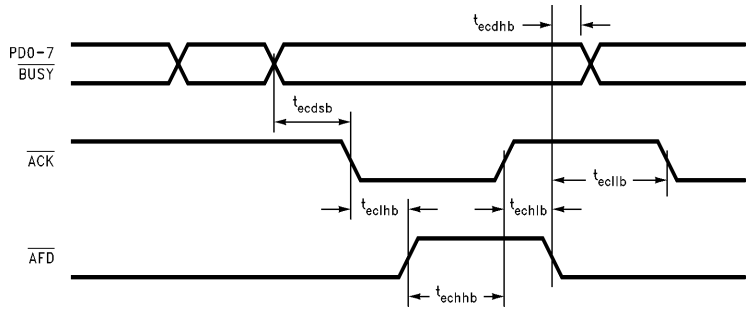

TL/C/12074–80

FIGURE 10-23. ECP Parallel Port Backward Timing Diagram

10.0 Electrical Characteristics (Continued)

10.2.17 RTC

Symbol	Parameter	Conditions	Min	Max	Units
t_{RDI}	$\overline{IOR}$ to $\overline{IRQ}$ TRI-STATE			36	ns
t_{RCI}	MR to $\overline{IRQ}$ TRI-STATE			25	ns
t_{RCL}	MR High Time		100		μs
t_{VPG}	V_{CC} (4.5V) to PWRGOOD		0		ns
t_{PVG}	PWRGOOD to V_{CC} (4.5V)		0		ns
t_{VPG}	V_{CC} (4.5V) to PWRGOOD		10		ms
t_{VMR}	V_{CC} (4.5V) to MR		10		ms
t_{PGM}	PWRGOOD to MR		0		ns

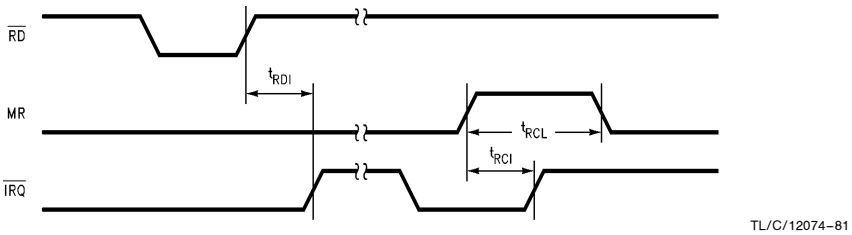

FIGURE 10-24. $\overline{IRQ}$ Release Delay

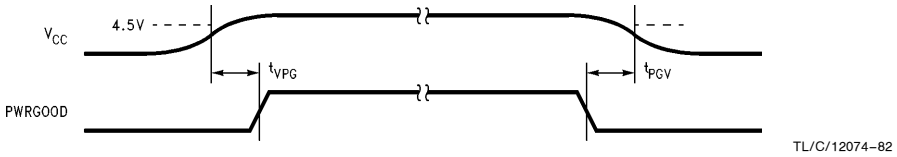

FIGURE 10-25. PWRGOOD V_{CC} Timing

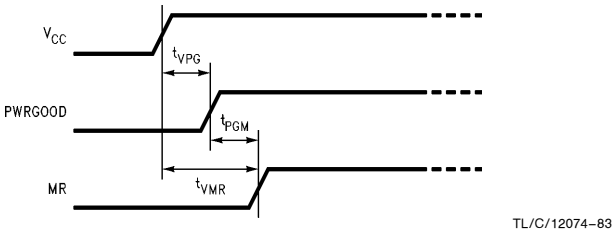

FIGURE 10-26. PWRGOOD MR Timing

10.0 Electrical Characteristics (Continued)

10.2.18 Programmable Chip Select Timing

Symbol	Parameter	Min	Max	Units
t_{CE}	Delay from Command to Enable Chip Select	0	25	ns
t_{CD}	Delay from Command to Disable Chip Select	0	25	ns

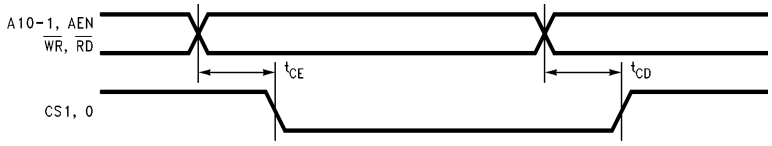

TL/C/12074–84

FIGURE 10-27. Chip Select Timing

Physical Dimensions inches (millimeters)

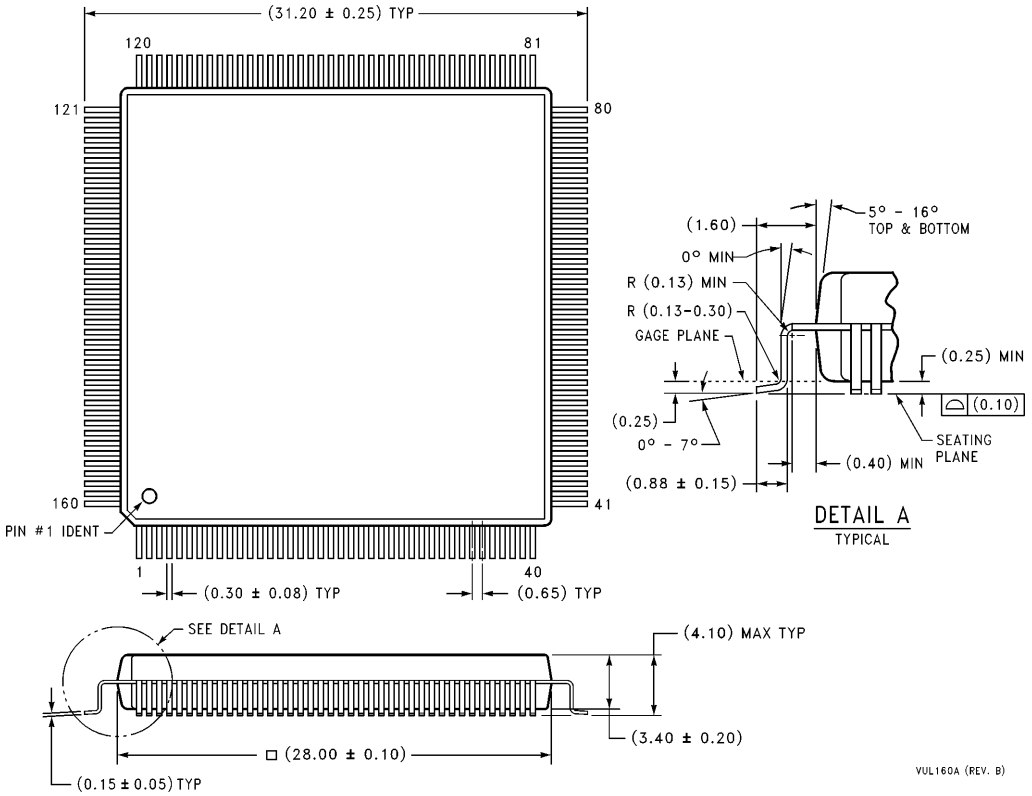

Plastic Quad Flatpak
Order Number PC87303VUL
NS Package Number VUL160A

LIFE SUPPORT POLICY

NATIONAL'S PRODUCTS ARE NOT AUTHORIZED FOR USE AS CRITICAL COMPONENTS IN LIFE SUPPORT DEVICES OR SYSTEMS WITHOUT THE EXPRESS WRITTEN APPROVAL OF THE PRESIDENT OF NATIONAL SEMICONDUCTOR CORPORATION. As used herein:

1. Life support devices or systems are devices or systems which, (a) are intended for surgical implant into the body, or (b) support or sustain life, and whose failure to perform, when properly used in accordance with instructions for use provided in the labeling, can be reasonably expected to result in a significant injury to the user.
2. A critical component is any component of a life support device or system whose failure to perform can be reasonably expected to cause the failure of the life support device or system, or to affect its safety or effectiveness.

National Semiconductor Corporation
2900 Semiconductor Drive
P.O. Box 58090
Santa Clara, CA 95052-8090
Tel: 1(800) 272-9959
TWX: (910) 339-9240

National Semiconductor GmbH
Livry-Gargan-Str. 10
D-82256 Fürstenfeldbruck
Germany
Tel: (81-41) 35-0
Telex: 527649
Fax: (81-41) 35-1

National Semiconductor Japan Ltd.
Sumitomo Chemical
Engineering Center
Bldg. 7F
1-7-1, Nakase, Mihama-Ku
Chiba-City,
Ciba Prefecture 261
Tel: (043) 299-2300
Fax: (043) 299-2500

National Semiconductor Hong Kong Ltd.
13th Floor, Straight Block,
Ocean Centre, 5 Canton Rd.
Tsimshatsui, Kowloon
Hong Kong
Tel: (852) 2737-1600
Fax: (852) 2736-9960

National Semiconductores Do Brazil Ltda.
Rue Deputado Lacorda Franco
120-3A
Sao Paulo-SP
Brazil 05418-000
Tel: (55-11) 212-5066
Telex: 391-1131931 NSBR BR
Fax: (55-11) 212-1181

National Semiconductor (Australia) Pty, Ltd.
Building 16
Business Park Drive
Monash Business Park
Nottinghill, Melbourne
Victoria 3168 Australia
Tel: (3) 558-9999
Fax: (3) 558-9998

National does not assume any responsibility for use of any circuitry described, no circuit patent licenses are implied and National reserves the right at any time without notice to change said circuitry and specifications.

This datasheet has been download from:

www.datasheetcatalog.com

Datasheets for electronics components.

National Semiconductor was acquired by Texas Instruments.

http://www.ti.com/corp/docs/investor_relations/pr_09_23_2011_national_semiconductor.html

This file is the datasheet for the following electronic components:

PC87303 - http://www.ti.com/product/pc87303?HQS=TI-null-null-dscatalog-df-pf-null-wwe