ESS Technology, Inc.

ES1879
*Audio*Drive® Solution
Product Brief

DESCRIPTION

The ES1879 *Audio*Drive® solution is a mixed-signal single-chip device that provides 16-bit stereo sound and FM music synthesis for notebook computers. It is compliant with the Microsoft® PC 97 and PC98 specifications and WHQL audio requirements. The ES1879 includes an embedded microcontroller, an OPL3™ superset ESFM™ music synthesizer, 16-bit stereo wave CODEC, 16-bit stereo system DAC, 16-bit stereo music DAC, 16-bit stereo I^2S DAC, optional ISA Plug and Play (PnP) support, hardware master volume control, DMA control logic with FIFO, ISA bus interface logic, general-purpose I/O, and digital dual game port. The ES1879 also incorporates three serial ports which allow interfacing with external DSP, wavetable, and MIDI (MPU-401 UART mode compatible). In addition, the ES1879 offers I^2S Zoom Video interface and support for the optional ES978 Expansion Audio Mixer in docking stations.

A four-wire expansion analog bus and two-wire serial control bus connect the ES1879 with the ES978, allowing the ES1879 to engage the docking station's audio resources when docked.

The ES1879 *Audio*Drive® can record, compress, and play back voice, sound, and music with built-in mixer controls. Using two high-performance DMA channels, the ES1879 supports full-duplex operation for simultaneous record and playback. One channel supports bidirectional DMA data transfers and the other supports DMA playback.

The ES1879 *Audio*Drive® supports optional ISA Plug and Play with configuration for 4 logical devices: configuration device, audio plus ESFM™ synthesis, game port, and MPU-401.

The integrated 3-D audio effects processor uses technology from *Spatializer*® Audio Laboratories, Inc. and expands the sound field emitted by two speakers to create a resonant 3-D sound environment.

The MPU-401 hardware is for interfacing with an external MIDI serial port. The ES1879 music DAC allows the use of an external wavetable (ES689/ES69x) connected to a wavetable serial port. I/O address, DMA, and interrupt selection can be controlled through system software or Plug and Play.

A DSP serial interface in the ES1879 allows an external DSP to take over ADC or DAC resources.

The ES1879 supports telegaming architecture with headsets and includes data paths for host-based Acoustic Echo Cancellation processing.

The enhanced dual game port supports hardware timing interrupt generation that eliminates the need for CPU polling.

Advanced Power Management (APM) features include suspend and resume from disk.

The ES1879 *Audio*Drive® solution is available in an industry-standard 100-pin Thin Quad Flat Pack (TQFP) package.

FEATURES

- Single, high-performance, mixed-signal, 16-bit stereo VLSI chip for digital audio
- High-quality, OPL3 superset ESFM™ music synthesizer
- High-performance DMA supports Demand Transfer or F-type
- Integrated 3-D audio effects processor from *Spatializer*®
- Power management support with low power operation for a notebook environment

Record and Playback Features

- Record, compress, and play back voice, sound, and music
- 16-bit stereo CODEC for digital audio
- 3 additional stereo DACs for system playback, music synthesis and I^2S from PC card
- Programmable sample rate from 4 kHz to 48 kHz for record and playback
- 2- or 3-button hardware volume control for up, down, and mute
- Full-duplex stereo operation for simultaneous record and playback

Mixer Features

- 6-channel stereo mixer inputs for line, auxiliary A (CD audio), auxiliary B, digital audio (wave files), music synthesizer, I^2S Zoom Video audio, and a mono channel mixer input for microphone
- Programmable 6-bit logarithmic master volume control

Interfaces to Expansion Audio Mixer (ES978)

- Simple hot-docking interface to ES978 expansion audio mixer
- Two-wire digital status and data communication between ES1879 and ES978 supports register mirroring with worst case latency of approximately 140 µsec
- On-chip dual pairs of analog differential signals for audio I/O with ES978 expansion audio mixer

Inputs and Outputs

- MIDI serial port compatible with MPU-401 UART mode
- Supports up to 7 general-purpose inputs and 7 general-purpose outputs that can be slaved with corresponding pins of ES978 expansion audio mixer
- ESS high-performance dual game port with hardware timing
- Optional full ISA Plug and Play support
- Software address mapping, DMA and IRQ selections for motherboard implementation
- I^2S Zoom Video port interface with a sample rate up to 48 kHz for MPEG audio
- Wavetable serial port interface to ES689/ES69x for direct access to the music DAC

Compatibility

- Supports PC games in Sound Blaster™ and Sound Blaster™ Pro modes
- Supports Microsoft Windows™ Sound System®

- Meets PC97, PC98, and WHQL specifications.

PINOUT

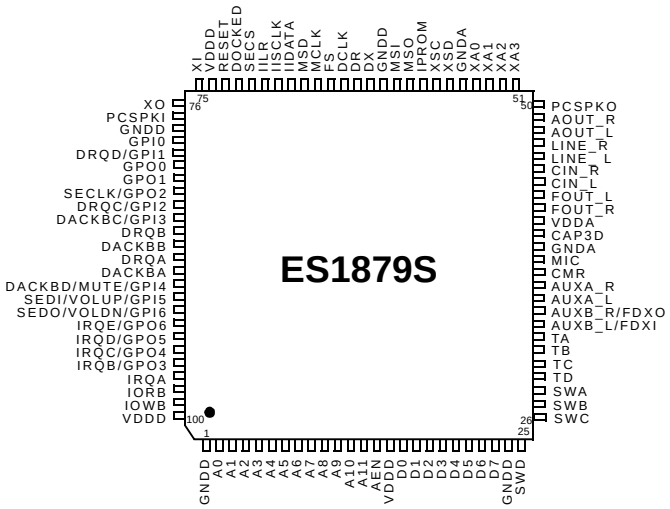

BLOCK DIAGRAM

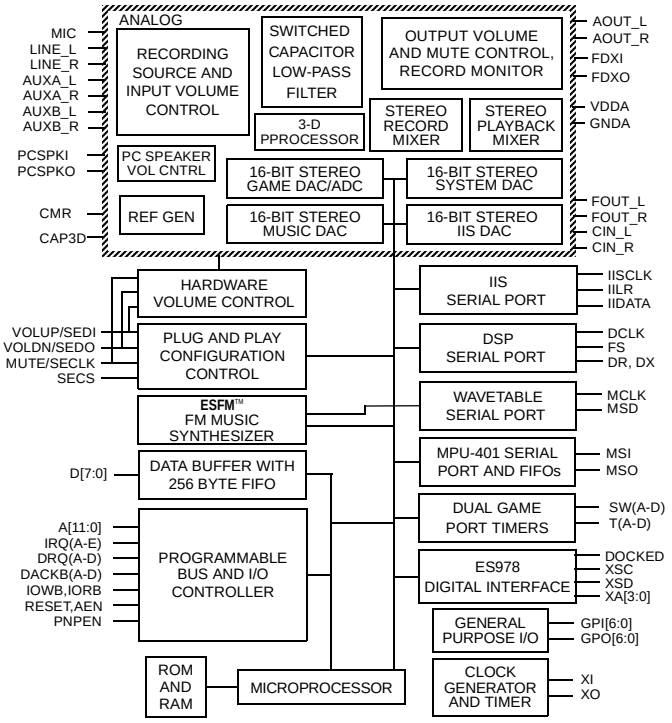

PIN DESCRIPTION

Name	Number	I/O	Description
GNDD	1, 24, 61, 78	I	Digital ground.
A[11:0]	13:2	I	ISA address bus.
AEN	14	I	ISA address valid when active-low, DMA when high.
VDDD	15, 74, 100	I	Digital power supply (3.0 - 5.5 V)
D[7:0]	23:16	I/O	ISA data bus. 24 mA drivers.
SW(A-D)	28:25	I	Joystick switch inputs. These pins have internal pull-ups to VDDD.
T(A-D)	32:29	I/O	Joystick timers. The timers use the digital power supply. These pins have internally weak pull-downs to GND (> 1 MΩ).
AUXB_L	33	I	Aux B input, left. This pin has an internal pull-up to CMR.
FDXI		I	Used with DSP interface as line-level mono input (25 kΩ input impedance).
AUXB_R	34	I	Aux B input, right. This pin has an internal pull-up to CMR.
FDXO		O	Used with DSP interface as line-level mono output, capable of driving a 5 kΩ load.
AUXA_L, AUXA_R	35, 36	I	Aux A (CD) inputs, left and right. These pins have internal pull-ups to CMR.
CMR	37	O	2.25 V reference buffer output.
MIC	38	I	Mic input to +26 dB internal preamp. This pin has an internal pull-up to CMR.
GNDA	39,55	I	Analog ground.
CAP3D	40	I	Bypass capacitor to GND for 3D effect.
VDDA	41	I	Analog power supply, 4.75 - 5.25 V.
FOUT_L, FOUT_R	43:42	O	Filter outputs, left and right. These pins are normally AC coupled to CIN_L and CIN_R.
CIN_L, CIN_R	44, 45	I	Capacitive coupled inputs, left and right. The input resistance is about 50 kΩ.
LINE_L, LINE_R	46, 47	I	Line inputs, left and right. These pins have internal pull-ups to CMR.
AOUT_L, AOUT_R	48, 49	O	Analog outputs, left and right, from master volume. These pins can drive a 5 kΩ load.
PCSPKO	50	O	PC speaker analog output.
XA[3:0]	51, 52, 53, 54	I/O	Expansion audio bus. These are analog signals that are DC coupled to the corresponding pins of the ES978.
XSD	56	I/O	Expansion serial bus data I/O.
XSC	57	O/Hi Z	Expansion serial bus clock and frame sync.

Name	Number	I/O	Description
IPROM	58		Select between internal PnP ROM and external EEPROM for Plug and Play configuration. 1 = internal ROM, 0 = external EEPROM. ES1878 function PNPEN is replaced by bit 2 of PnP Vendor register 2Dh.
MSO	59	O	MIDI serial output.
MSI	60	I	MIDI serial input. MSI has an internal pull-up device.
DX	62	O/Hi Z	Serial data transmit.
DR	63	I	Serial data receive. This pin has an internal pull-down to GND.
DCLK	64	I	Serial clock input. This pin has an internal pull-down to GND.
FS	65	I	Frame sync input. Software programmable to be active-high or active-low. This pin has an internal pull-down to GND.
MCLK	66	I	Serial clock input from ES689/ES69x. This pin has an internal pull-down to GND.
MSD	67	I	Serial data input from ES689/ES69x. This pin has an internal pull-down to GND.
IIDATA	68	I	Serial data for I^2S interface. This pin has an internal pull-down to GND.
IISCLK	69	I	Serial shift clock for I^2S interface. This pin has an internal pull-down to GND. I^2S
IILR	70	I	Left/Right signal for I^2S interface. This pin has an internal pull-down to GND.
SECS	71	O	Serial EEPROM CS. IPROM SECS ROM Type 0 0 Use Plug and Play BIOS. 0 1 93LC66, 512X8, 9 address bits. 1 x Internal mask ROM.
DOCKED	72	I	Status input that is active-high when the ES1879 is docked to the ES978.
RESET	73	I	ISA active-high reset.
XI	75	I	14.318 MHz clock input, or external crystal.
XO	76	O	Output to external 14.318 MHz crystal.
PCSPKI	77	I	PC speaker digital input.
GPI0	79	I	General-purpose input 0.
DRQD	80	I/O/Hi Z	ISA active-high DMA request.
GPI1		I/O/Hi Z	General-purpose input 1
GPO[1:0]	82:81	O	General-purpose outputs.
GPO2	83	O	General-purpose output.
SECLK		I	External serial EEPROM clock pin for PnP.
DRQC	84	I/O/Hi Z	ISA active-high DMA request.
GPI2		I/O/Hi Z	General-purpose input 2.
DACKBC	85	I	ISA active-low DMA acknowledge.
GPI3		I	General-purpose input 3.
DRQB	86	O/Hi Z	ISA active-high DMA request.
DACKBB	87	I	ISA active-low DMA acknowledge.
DRQA	88	O/Hi Z	ISA active-high DMA request.
DACKBA	89	I	ISA active-low DMA acknowledge.
DACKBD	90	I	ISA active-low DMA acknowledge.
MUTE		I	Active-low mute input. This pin has an internal pull-up to VDD.
GPI4		I	Optionally used as general-purpose input 4.
SEDI	91	I	Data input pin to external PnP serial EEPROM.
VOLUP		I	Active-low volume-up input. This pin has an internal pull-up to VDD.
GPI5		I	Optionally used as general-purpose input 5.
SEDO	92	O	Data output pin to external PnP serial EEPROM.
VOLDN		I	Active-low volume-down input. This pin has an internal pull-up to VDD.
GPI6		I	Optionally used as general-purpose input 6.
IRQE	93	O/Hi Z	ISA interrupt request.
GPO6		O	General-purpose output 6.
IRQD	94	O/Hi Z	ISA interrupt request.
GPO5		O	General-purpose output 5.
IRQC	95	O/Hi Z	ISA interrupt request.
GPO4		O	General-purpose output 4.
IRQB	96	O/Hi Z	ISA interrupt request.
GPO3		O	General-purpose output 3.
IRQA	97	O/Hi Z	ISA interrupt request.
IORB	98	I	ISA active-low read strobe.
IOWB	99	O	ISA active-low write strobe.

DIGITAL CHARACTERISTICS

Symbol	Parameter	Min	Max	Unit	Conditions
VIH1	Input high voltage: All except SW(A–D), VOLUP, VOLDN, MUTE	2.5		V	VDDD = min
VIH2	Input high voltage: SW(A–D), VOLUP, VOLDN, MUTE	4.0		V	VDDD = min
VIL	Input low voltage		0.8	V	VDDD = max
VOL1	Output low voltage: All except D[7:0], DRQx, IRQx, XSC, XSD		0.4	V	IOL = 4 mA, VDDD = min
VOH1	Output high voltage: All except D[7:0], DRQx, IRQx, XSC, XSD	2.5		V	IOH = -3 mA, VDDD = max
VOL2	Output low voltage: XSD, XSC, DRQx, IRQx, D[7:0]		0.4	V	IOL = 16 mA, VDDD = min
VOH2	Output high voltage: XSD, XSC, DRQx, IRQx, D[7:0]	2.5		V	IOH = -12 mA, VDDD = max

MAXIMUM RATINGS

Rating	Symbol	Value
Analog supply voltage	VDDA	-0.3 to 7.0 V
Digital supply voltage	VDDD	-0.3 to 7.0 V
Input voltage	VIN	-0.3 to 7.0 V
Operating temperature range	TA	0 to 70 °C
Storage temperature range	TSTG	-50 to 125 °C

SERVICE AND SUPPORT

- Evaluation Kit
- Manufacturing Kit
- Reference Design

ANALOG CHARACTERISTICS

Parameter	Pins	Min	Typ	Max	Unit
Reference voltage	CMR, VREF (VDDA=5.0 V)		2.25		V
Input impedance	LINE_L/R, AUXA_L/R, AUXB_L/R, MIC		125		kΩ
	CIN_L, CIN_R	35	50	65	kΩ
Output impedance	FOUT_L, FOUT_R	3.5	5	6.5	kΩ
	AOUT_L, AOUT_R max load for full-scale output range		10		kΩ
Input voltage	MIC w/ preamp on			125	mVp-p
	MIC w/ preamp off			2.8	Vp-p
	LINE_L/R, AUXA_L/R, AUXB_L/R, XA[3:0]			3.4	Vp-p
Output voltage	AOUT_L, AOUT_R full-scale output range			VDDA -1.0	Vp-p
	XA[3:0]			3.4	Vp-p
	FDXO		2.0		Vp-p
Gain	Mic preamp		26		dB

BUNDLED SOFTWARE AND DRIVERS

- *Audio***Rack**™
- Bundled Drivers for
  - Microsoft Windows®95 and Windows®98
  - Microsoft Windows 3.1
  - Microsoft Windows for Workgroups™
  - Microsoft Windows NT®
  - IBM® OS/2®

TYPICAL APPLICATION

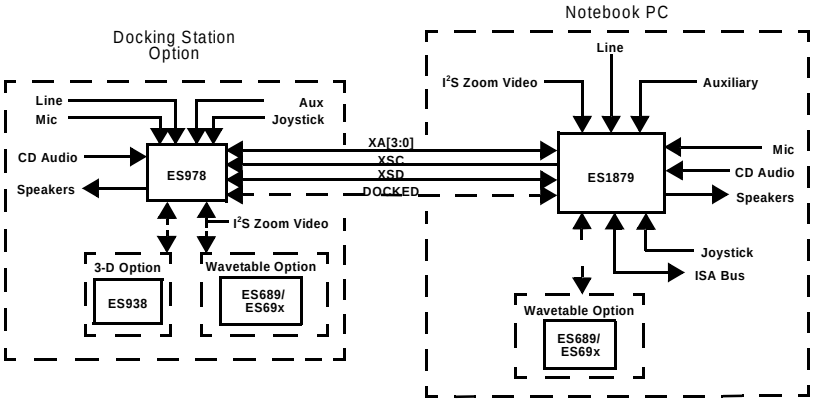

ESS Technology, Inc.
48401 Fremont Blvd.
Fremont, CA 94538
Tel: 510-492-1088
Fax: 510-492-1098

No part of this publication may be reproduced, stored in a retrieval system, transmitted, or translated in any form or by any means, electronic, mechanical, manual, optical, or otherwise, without the prior written permission of ESS Technology, Inc.

ESS Technology, Inc. makes no representations or warranties regarding the content of this document.

All specifications are subject to change without prior notice.

ESS Technology, Inc. assumes no responsibility for any errors contained herein.

(P) U.S. Patent 4,214,125 and others, other patents pending.

*Audio***Drive**® is a registered trademark of ESS Technology, Inc.

ESFM™ and *Audio***Rack**™ are trademarks of ESS Technology, Inc.

All other trademarks are owned by their respective holders and are used for identification purposes only.

 © 1997 ESS Technology, Inc. All rights reserved.