Overview

HP AlphaServer ES47 Tower
HP AlphaStation ES47 Tower

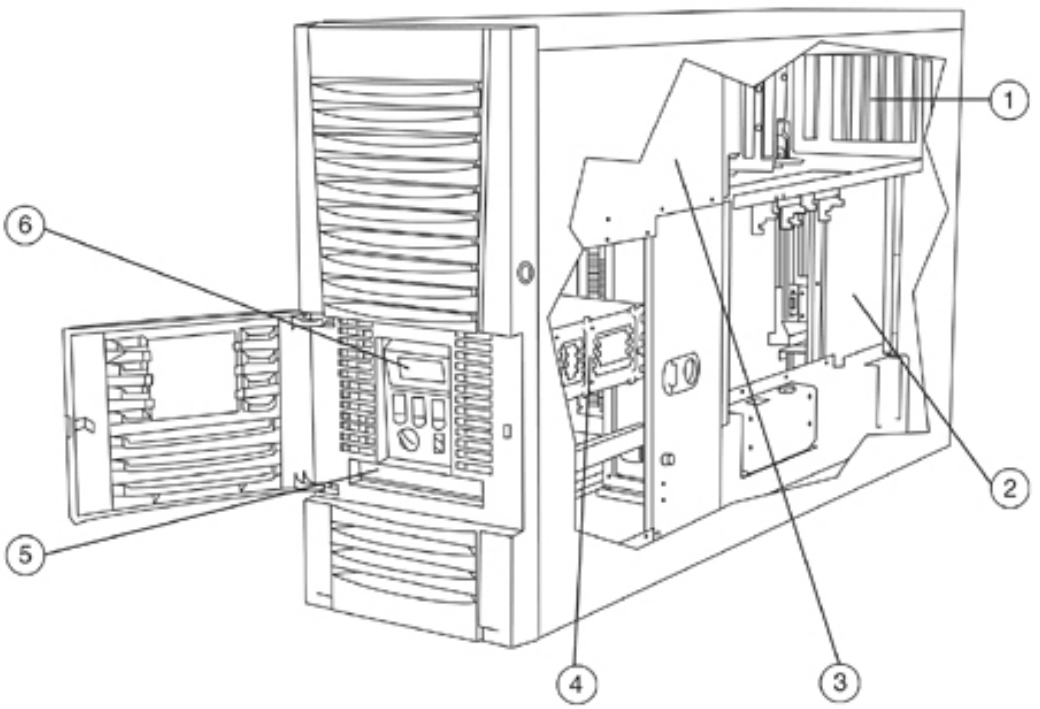

1. I/O Slots
2. CPU Building Block Module
3. Hot-swap Power Supplies
4. Hard Disk Drive Bays
5. DVD/CD-RW Drive
6. Operator Control Panel

HP AlphaServer ES47

Overview

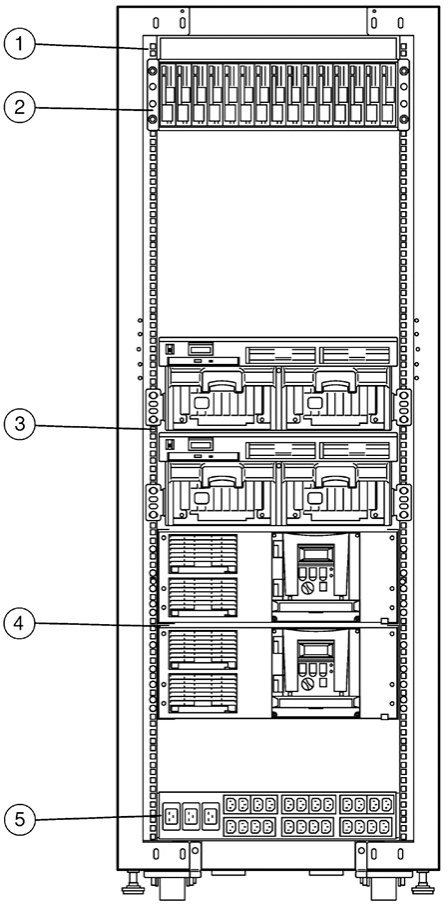

1. Cable/DSL HUB
2. StorageWorks Drawer (optional)
3. PCI/PCI-X I/O Expansion Drawer(s) (optional)
4. System Building Block Drawer (Model 2 includes 1 drawer; Model 4 includes 2 drawers)
5. AC input controller(s) (mandatory options)

HP AlphaServer ES80

Overview

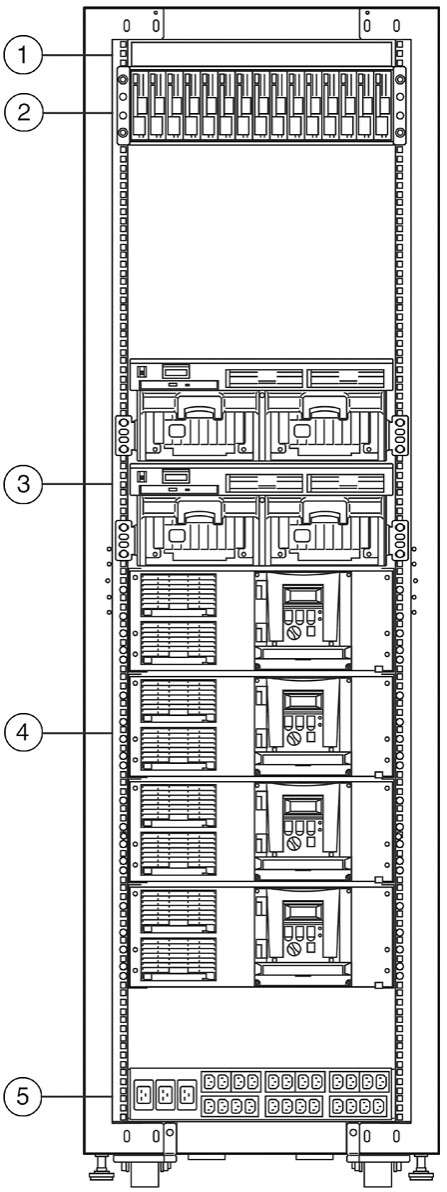

1. Cable/DSL HUB
2. StorageWorks Drawer (optional)
3. PCI/PCI-X I/O Expansion Drawer(s) (optional)
4. System Building Block Drawer (Model 2 includes 1 drawer; Model 3 includes 2 drawers; Model 6 includes 3 drawers; Model 8 includes 4 drawers)
5. AC input controller(s) (mandatory options)

Overview

At A Glance

AlphaServer ES47/ES80 systems

- Up to 8 Alpha 21364 EV7 processors at 1150 MHz and 1000 MHz with advanced on-chip memory controllers and switch logic capable of providing 12.3 GB/s of memory bandwidth per processor
- Choice of memory options; up to 8 GB of RDRAM memory per CPU supported
- Redundant features providing maximum uptime - N+1 Voltage Regulator Modules (VRMs); hot- plug redundant power supplies; cooling provided by hot-plug redundant system fans; dual AC input is standard
- 5 PCI-X/PCI slots and one AGP slot in each 2 Processor Building Block Drawer
- Optional RAID memory support
- Optional Standard I/O Drawer with 11 configurable PCI-X/PCI slots and one AGP slot; hot-swap power supplies
- Optional High-performance I/O Drawer with eight PCI-X slots @133 MHz; hot-swap power supplies
- Enhanced reliability with ECC-protected memory, processor cache, and system data paths
- Tru64 UNIX or OpenVMS factory installed software (FIS); optional high availability support with Tru64 UNIX and OpenVMS cluster solutions
- Product warranty, 1-year hardware, on-site next business day and 90-day software, telephone support delivered by HP Services

---

Base Systems - Contents

Step 1	Requirements
Step 1a	System Requirements
Step 1b	Configuration Requirements for Partitions
Step 1c	Licensing Systems for Both OpenVMS and Tru64 UNIX
Step 1d	System Management Hardware/Software Requirements
Step 2	Base System - Mandatory
Step 3	CPU Building Blocks - Mandatory
Step 4	Memory Options - Mandatory
Step 5	System Disk and Load Devices - Optional
Step 6	External I/O Building Block Drawers for System Expansion - Optional
Step 7	Packaging and Power - Mandatory Choice
Step 7a	H9A40/H9A45 Racks
Step 7b	10000 Series Rack
Step 7c	Tower Enclosure or Other 19-inch RETMA Standard Racks

ES/GS Common Options - Hardware Options & Peripherals, Software, and Services
Upgrades
Technical Specifications

Standard Features

Processor	Up to 8 Alpha 21364 EV7 processors at 1150 MHz and 1000 MHz
Cache Memory	Cache Memory 1.75-MB ECC L2 on-chip cache, 7-way set associative
Architecture	Glue-less processor-to-processor multiprocessor architecture constructed from a set of basic components: • System Building Block Drawers • CPU Building Block Modules • I/O Expansion Building Block Drawers

CPUs, Memory, and I/O slots	ES47 Tower	ES47	ES80 Model 8
Maximum CPUs supported	2	4	8
Maximum memory supported	16 GB	32 GB	64 GB
Maximum PCI/PCI-X slots supported	5	32	64
Maximum AGP slots supported	1	4	8

Storage Controller	Integrated Ultra3 SCSI controller for internal disk drives (One per System Building Block Drawer)	
Interfaces	USB	One Dual USB port per 2P System Building Block Drawer
	Server Management	Server Management LAN Connection to a single 2P System Building Block Drawer or to the Cable/DSL hub for a system with more than one Building Block Drawer.
	Serial	One MBM serial connection per 2P System Building Block Drawer
Form Factor	ES47	Tower
	ES47 and ES80	Rack, 34U or 41U
Boot/Diagnostic Devices	Load Device	One slim-line DVD/CD-RW drive NOTE: Only bootable CD media is supported for firmware and operating system booting. Bootable DVD media is not supported.
	Hard Drives	Choice of 18.2/36.4/72.8/146-GB/300-GB SCSI disk drives
Power Supplies	Two @208V (700-Watt @120V) 48V auto-sensing power supplies, hot swappable, N+1 Racks require power distribution units, North America or International variant	

Standard Features

OS Support	Tru64 UNIX V5.1B + IPK, or later AlphaServer ES47/ES80 Tru64 UNIX systems include pre-installed software, Base license, Unlimited User license, Server Extension license, Internet Express, and Secure Web Server OpenVMS V7.3-1 plus Update Kit, or later AlphaServer ES47/ES80 OpenVMS systems include pre-installed software, Base license with System Manager license and Enterprise Integration Server License Package for OpenVMS Linux: For information on Linux distributions for Alpha, go to http://www.alphalinux.org/
Service and Support	Protected by HP Services including a 1-year on-site hardware warranty. Training, consulting, network integration, software support, comprehensive system maintenance and guaranteed uptime services are also available for customers requiring higher levels of service and support.

Systems

Step 1 - Requirements

Step 1a - System Requirements

Mandatory Purchases: The system cannot function without these options or services - the option or service must be ordered with the system.

- Base System (Step 2)
- Dual CPU Building Block Module (Step 3)
- Memory (Step 4)
- ES47 Tower Enclosure Power Cord (Step 7)

Optional Purchases:

- System disk (Step 5)
- External I/O Building Block Drawer (Step 6)
- Rack Enclosures (Step 8)
- Other (see ES/GS Common Options)

Recommended Purchases: System performance or function will be enhanced if this option or service is ordered.

- HP Care Pack Service Package (ES/GS Common Options - Step 12)

Step 1b - Requirements for Partitions

A single AlphaServer ES47/ES80 can be divided into logical hardware partitions as small as two processors, each running an instance of Tru64 UNIX or an instance of OpenVMS. Each partition is allocated its own dedicated "shared-nothing" set of hardware resources: CPU module(s), memory module(s), and I/O. Each hardware partition is viewed as a unique node, from a system point-of-view, with its own instance of Tru64 UNIX or OpenVMS operating system and application software, independent system console, and error log.

Minimum Hardware and Software Required per Hardware Partition

1. One Dual CPU Building Block Module (Step 3)
2. Memory (Step 4)
3. One local disk (Step 5) or external storage for the system software. Network boot can be used in place of the disk storage.
4. User access via the USB port in a Master I/O Drawer, a network connection (requires a LAN or WAN I/O adapter), or local terminal (requires an async I/O adapter)
5. All systems require the following minimum firmware and software revisions to run hard partitions:
    a. Minimum Firmware console rev: V6.5-8
    b. Tru64 UNIX: V5.1B + Patch kit - T64V51BB22AS0002-20030415.tar
    c. OpenVMS: V7.3-1 + TIMA Kits (available at http://h18003.www1.hp.com/alphaserver/gs1280/gs1280_tech.html):
        i. DEC-AVPVMS-VMS731_PARTITIONING-V0100-4.PCSI
        ii. AVPVMS-VMS731_PARTITIONING-V0100_CVRLET
        iii. AVPVMS-VMS731_PARTITIONING-V0100_SUBFORM

Configuration Guidelines

Systems

1. The two processors on a Dual Processor CPU Module cannot be split between hard partitions.
2. The set of processors assigned to a partition must form a continuous rectangle on the system interconnect mesh network.
3. Base systems include an operating system license (Tru64 UNIX or OpenVMS) that licenses all hardware partitions of the system.
4. The license for an hp software product, the license(s) and license key(s) that represent those licenses, may be applied to any partition (OpenVMS Galaxy instance or hardware partition) within that system. Different versions of the operating system or layered products may be used on different partitions. In this case, the customer must be licensed for the latest version in use. Software products from other suppliers may have different licensing requirements for partitions.

Step 1c - Licensing Systems for Both OpenVMS and Tru64 UNIX

A System requires licenses for both OpenVMS and Tru64 UNIX operating systems, either for dual O/S boot of the entire system or for different operating systems in separate hard partitions. To use a second operating system, order the appropriate base system upgrade license and as many dual CPU SMP licenses as needed.

OpenVMS software base system upgrade for ES47	QB-63PAE-AK
Tru64 UNIX software base system upgrade for ES47	QB-595AK-AB
OpenVMS software base system upgrade for ES80	QB-63PAG-AC
Tru64 UNIX software base system upgrade for ES80	QB-595AM-AB
OpenVMS Alpha dual CPU SMP license for ES47/ES80	QL-MT1A9-6S
Tru64 UNIX Alpha dual CPU SMP license for ES47/ES80	QL-MT4A9-6S

Step 1d - System Management Hardware/Software Requirements

Each AlphaServer ES47, ES80, and GS1280 system includes System Management software that can significantly enhance and simplify monitoring and control of the system. Use of the System Management software is optional. The software, which runs on a separate Intel or Alpha system, consists of two major components:

1. Alpha Management Station (AMS) - for monitoring and control of multiple ES47, ES80, and GS1280 Alpha Systems. AMS offers the highest level of server management functionality for a single or multi-platform environment. The AMS software requires the following hardware in order to operate:
   - Tru64 UNIX platform with 512-MB memory, 4-GB disk space, and two network interface cards running Tru64 UNIX V5.1B or later.
   - Intel IA-32 platform running Linux, 500-MHz CPU or faster, 256-MB memory, 4-GB disk space, and one network interface card.
2. Alpha Management Utility (AMU) - for monitoring and control of a single ES47, ES80, or GS1280 Alpha System. The AMU is a GUI based application that provides a sophisticated, yet user-friendly graphics interface. The AMU is a Web-based utility, which allows a user local and remote access from a browser. The AMU software requires one of the following hardware platforms in order to operate:
   - Intel IA-32 platform running Windows 2000 or later, 500-MHz CPU or faster, 256-MB memory, 4-GB disk space, and one network interface card.
   - Intel IA-32 platform running Linux, 500-MHz CPU or faster, 256-GB memory, 4-GB disk space, and one network interface card.
   - Tru64 UNIX platform running V5.1B or later, 512-MB memory, 4-GB disk space, and one network interface card.
   - OpenVMS platform running V7.3-1 or later, 512-MB memory, 4-GB disk space, and one network interface card.
3. Both the AMS and AMU software require Internet Explorer 5.5 or later or Netscape 4.76 or later.
4. AMS/AMU software kits and instructions may be downloaded from: http://ftp.digital.com/pub/Digital/Alpha/firmware/interim/ams/index.html

Systems

Step 2 - Base System - Mandatory

Mandatory selection of at least one Base System required.					
Model	OS	2 Processor System Building Block Drawers Included	Total CPUs Supported (See Step 3)	I/O Slots in Base System	Order No.
AlphaServer ES47 Tower	Tru64 UNIX	1	2	5 PCI-X, 1 AGP	DA-20AAA-AB
AlphaServer ES47 Tower	OpenVMS	1	2	5 PCI-X, 1 AGP	DY-20AAA-AB
AlphaStation ES47 Tower	Tru64 UNIX	1	2	5 PCI-X, 1 AGP	DA-20AAA-AC
AlphaStation ES47 Tower	OpenVMS	1	2	5 PCI-X, 1 AGP	DY-20AAA-AC
ES47 Model 2	Tru64 UNIX	1	2	5 PCI-X, 1 AGP	DA-27AAA-AA
ES47 Model 2	OpenVMS	1	2	5 PCI-X, 1 AGP	DY-27AAA-AA
ES47 Model 4	Tru64 UNIX	2	4	10 PCI-X, 2 AGP	DA-47AAA-AA
ES47 Model 4	OpenVMS	2	4	10 PCI-X, 2 AGP	DY-47AAA-AA
ES80 Model 2	Tru64 UNIX	1	2	5 PCI-X, 1 AGP	DA-20AAA-AA
ES80 Model 2	OpenVMS	1	2	5 PCI-X, 1 AGP	DY-20AAA-AA
ES80 Model 4	Tru64 UNIX	2	4	10 PCI-X, 2 AGP	DA-40AAA-AA
ES80 Model 4	OpenVMS	2	4	10 PCI-X, 2 AGP	DY-40AAA-AA
ES80 Model 6	Tru64 UNIX	3	6	15 PCI-X, 3 AGP	DA-60AAA-AA
ES80 Model 6	OpenVMS	3	6	15 PCI-X, 3 AGP	DY-60AAA-AA
ES80 Model 8	Tru64 UNIX	4	8	20 PCI-X, 4 AGP	DA-80AAA-AA
ES80 Model 8	OpenVMS	4	8	20 PCI-X, 4 AGP	DY-80AAA-AA
NOTE: Base systems do not include CPUs or memory					

Step 3 - CPU Building Block Modules – Mandatory

	Mandatory Configurations	
	CPUs	Dual CPU Modules
ES47 Tower, ES47/ES80 Model 2	2	1
ES47/ES80 Model 4	4	2
ES80 Model 6	6	3
ES80 Model 8	8	4

Configuration Guidelines

1. CPU Building Blocks with different clock speeds can co-exist in one system, but must be separated into hard partitions where the CPUs have the same speed.
2. CPU Building Block or instant Capacity (iCAP) CPU Building Block Modules type (Tru64 UNIX or OpenVMS) must match the base system operating system selected in Step 2, or purchase a base operating system upgrade license to match the license with the CPU Building Block Module.

Systems

Full Use CPU Building Block Modules	AlphaServer ES47/ES80 Dual CPU Building Block, 2xEV7 CPUs, 1150 MHz, Tru64 UNIX SMP License	3X-KN73C-AB
	AlphaServer ES47/ES80 Dual CPU Building Block, 2xEV7 CPUs, 1150 MHz, OpenVMS SMP License	3X-KN73C-AC
	AlphaServer ES47 Tower Dual CPU Building Block Module, 2xEV7 CPUs, 1150 MHz, Tru64 UNIX SMP License	3X-KN73C-BB
	AlphaServer ES47 Tower Dual CPU Building Block Module, 2xEV7 CPUs, 1150 MHz, OpenVMS SMP License	3X-KN73C-BC
	AlphaServer ES47/ES80 Dual CPU Building Block, 2xEV7 CPUs, 1000 MHz, Tru64 UNIX SMP License	3X-KN73A-AB
	AlphaServer ES47/ES80 Dual CPU Building Block, 2xEV7 CPUs, 1000 MHz, OpenVMS SMP License	3X-KN73A-AC
	AlphaServer ES47 Tower Dual CPU Building Block Module, 2xEV7 CPUs, 1000 MHz, Tru64 UNIX SMP License	3X-KN73A-BB
	AlphaServer ES47 Tower Dual CPU Building Block Module, 2xEV7 CPUs, 1000 MHz, OpenVMS SMP License	3X-KN73A-BC

Configuration and Use of instant Capacity (iCAP) CPUs

The instant Capacity (iCAP) program gives HP customers the option to purchase add-on CPU modules at a reduced price and install those modules in systems ready to activate instantly when needed for extra computational capacity. To use the iCAP program for AlphaServers:

1. Order and install iCAP CPU modules along with Full Use CPUs. The total number of Full Use CPU Building Block Modules plus iCAP CPU Building Bock Modules must adhere to the limits outlined above for ES47/80 systems.
2. Use the iCAP software (supplied with the iCAP CPU Module) to set iCAP CPUs inactive. As long as the total number of active CPUs does not exceed the number of licensed CPUs owned for the system, the owner may choose which CPUs to designate as iCAP.
3. Inactive iCAP CPUs cannot include the primary CPU, CPUs responsible for hardware interrupts, CPUs being used by an application when configuring iCAP, a CPU connected to the I/O slots in the 2P Building Block Drawer, or a CPU connected to an I/O Building Block Drawer.
4. Activate the iCAP CPUs for First Use when extra capacity is needed, and then promptly purchase the iCAP Enablement (Right-to-Use).

iCAP CPU Building Block Module + iCAP Enablement = Full Use CPU Building Block Module

Systems

iCAP CPU Building Block Modules	AlphaServer ES47/ES80 iCAP Dual CPU Building Block, 1150 MHz, one iCAP CPU and one active CPU, Tru64 UNIX SMP License	3X-KN73C-CB
	AlphaServer ES47/ES80 iCAP Dual CPU Building Block, 1150 MHz, one iCAP CPU and one active CPU, OpenVMS SMP License	3X-KN73C-CC
	AlphaServer ES47 Tower iCAP Dual CPU Building Block Module, one iCAP CPU and one active CPU, 1150 MHz, Tru64 UNIX SMP License	3X-KN73C-DB
	AlphaServer ES47 Tower iCAP Dual CPU Building Block Module, one iCAP CPU and one active CPU, 1150 MHz, OpenVMS SMP License	3X-KN73C-DC
	AlphaServer ES47/ES80 iCAP Dual CPU Building Block, 1000 MHz, one iCAP CPU and one active CPU, Tru64 UNIX SMP License	3X-KN73A-CB
	AlphaServer ES47/ES80 iCAP Dual CPU Building Block, 1000 MHz, one iCAP CPU and one active CPU, OpenVMS SMP License	3X-KN73A-CC
	AlphaServer ES47 Tower iCAP Dual CPU Building Block Module, one iCAP CPU and one active CPU, 1000 MHz, Tru64 UNIX SMP License	3X-KN73A-DB
	AlphaServer ES47 Tower iCAP Dual CPU Building Block Module, one iCAP CPU and one active CPU, 1000 MHz, OpenVMS SMP License	3X-KN73A-DC

iCAP Enablement	AlphaServer ES47/ES80 iCAP Enable Single CPU, 1150 MHz Tru64 UNIX	3X-KN73C-EB
	AlphaServer ES47/ES80 iCAP Enable Single CPU, 1150 MHz OpenVMS	3X-KN73C-EC
	AlphaServer ES47 Tower iCAP Enable Single CPU, 1150 MHz Tru64 UNIX	3X-KN73C-FB
	AlphaServer ES47 Tower iCAP Enable Single CPU, 1150 MHz OpenVMS	3X-KN73C-FC
	AlphaServer ES47/ES80 iCAP Enable Single CPU, 1000 MHz Tru64 UNIX	3X-KN73A-EB
	AlphaServer ES47/ES80 iCAP Enable Single CPU, 1000 MHz OpenVMS	3X-KN73A-EC
	AlphaServer ES47 Tower iCAP Enable Single CPU, 1000 MHz Tru64 UNIX	3X-KN73A-FB
	AlphaServer ES47 Tower iCAP Enable Single CPU, 1000 MHz OpenVMS	3X-KN73A-FC

TERMS and DEFINITIONS

iCAP CPU MODULE	AlphaServer CPU add-on module including the OpenVMS SMP or Tru64 Unix SMP extension license, end user product warranty, iCAP software, plus limited Rights-to-Access the CPU module and leave inactive until First Use.
FIRST USE	First Use takes place when one or more processors on the iCAP CPU Module are activated for permanent use. Temporary replacement of a failed CPU with an iCAP CPU does not constitute First Use. Activation of an iCAP CPU after deactivation of a full use CPU does not constitute First Use. For example, owners are permitted to deactivate a Full Use CPU in one hard partition of the system and activate an iCAP CPU in another hard partition without First Use of the iCAP CPU. First Use of an iCAP CPU Module is considered to have taken place only when the number of active CPUs in the system is greater than the number of purchased full use CPUs.
iCAP ENABLEMENT PROGRAM PERIOD	Grants full Right-to-Use for a previously purchased iCAP CPU Module. There is no time limit to activate an iCAP CPU.

Step 4 - Memory Options — Mandatory

Configuration Guidelines

1. Mandatory selection of at least one memory option per Dual CPU Building Block Module.
2. Each CPU supports one or two memory options.
3. Both options must be the same size and speed for a CPU, but different size options can be used on different CPUs.
4. If an I/O Expansion Drawer is ordered (Step 6), both CPUs in the CPU Building Block Module connected to the I/O Drawer must have at least one memory option.
5. Each memory option consists of four RDRAM Inline Memory Modules (RIMMs). An optional fifth RIMM (RAID option) may be selected for redundancy that will allow uninterrupted operation in case of the loss of an entire RIMM. RAID options must be selected and matched for each memory option on one CPU, but RAID options do not have to be selected for all CPUs.

NOTE: Memory must be ordered for iCAP CPU Modules as well as Full Use CPU Modules. The system will use memory installed on the iCAP CPU Module even when the iCAP CPU is inactive.

Memory Application Examples

The following examples illustrate different ways of configuring an ES47/ES80 Model 4 system with a total of 8 GB (2 GB per CPU).

		CPU Building Block Module 1				CPU Building Block Module 2			
Case	Memory Option	CPU 1		CPU 2		CPU 3		CPU 4	
		Controller 1	Controller 2	Controller 1	Controller 2	Controller 1	Controller 2	Controller 1	Controller 2
A	3X-MS7AB-BA (4x256MB)	1	1	1	1	1	1	1	1
B	3X-MS7AB-CA (4x512MB)	1	-	1	-	1	-	1	-

Memory Application Examples

Configuring memory is a compromise between cost, total memory capacity, and memory bandwidth requirements. The following may be used as guidelines:

- Large memory (VLM) applications, in which large amounts of memory can substantially reduce I/O, may be optimized for total memory capacity and future capacity growth. In VLM applications, the right balance might be one memory option per CPU. (Case B)
- Typical commercial applications, such as transaction processing (OLTP) and multi-user timesharing, usually operate efficiently from cache and may not be materially affected by memory bandwidth. Memory configuration is a balance between memory bandwidth and future capacity growth. It is advisable to match the number of memory options to the number of CPUs. (Case B)
- Data mining can benefit from additional memory bandwidth. In these cases, configure two memory options per CPU. (Case A)
- The most demanding high-performance technical applications achieve a performance level that is directly proportional to memory bandwidth. In these cases, configure two memory options per CPU. (Case A)

Memory Specification	800 MHz	1066 MHz
Use only with the indicated CPU Modules (mandatory)	May be used with EV7 1.15 GHz (3X-KN73C-**) or EV7 1.0 GHz (3X-KN73A-**)	Must be used only with EV7 1.15 GHz (3X-KN73C-**)

ES Options

1-GB RDRAM Memory (4x256) Option	3X-MS7AB-BA	3X-MS7AC-BA
1-GB RDRAM Memory (1x256) RAID Option	3X-MS7AB-BC	3X-MS7AC-BC
2-GB RDRAM Memory (4x512) Option	3X-MS7AB-CA	3X-MS7AC-CA
2-GB RDRAM Memory (1x512) RAID Option	3X-MS7AB-CC	3X-MS7AC-CC
4-GB RDRAM Memory (4x1024) Option	3X-MS7AB-DB	3X-MS7AC-DA
4-GB RDRAM Memory (1x1024) RAID Option	3X-MS7AB-DD	3X-MS7AC-DC

Step 5 - System Disk and Load Devices – Optional

Each 2P System Building Block Drawer supports up to two, optional, hard disk drives or one, optional, internal HP StorageWorks DAT Tape Drive. See the Disks or Tape Drives steps of the ES/GS Common Options section of this QuickSpec for the selection of supported disks and DAT tape drives.

NOTE: The 2P System Building Block Drawer has an integrated Ultra3 SCSI controller and cabling for the internal disk drives or tape. The Drawer's mechanical design does not permit connection to the disk drives or tape from other storage adapters, such as a RAID adapter, that might be installed in the I/O slots in the System Drawer.

Optional selection of additional load device (one included with Base System)

DVD/CD-RW Combo Drive	Optional DVD/CD-RW combo drive for AlphaServer ES47/ES80 Systems; one per 2P System Building Block Drawer, minus included load device.	3X-PBXRD-AA

Step 6 - External I/O Building Block Drawers for System Expansion (Optional)

Configuration Rules

1. Each 2 Processor System Building Block Drawer in an ES47/ES80 system (not an ES47 Tower) can provide one I/O connection to an external I/O Drawer.
2. Either a Standard I/O Drawer (Expansion or Master) or High Performance (Expansion or Master) I/O Drawer can be used for optional, external I/O expansion. Any combination of drawers is supported up to the I/O connection limit.
   a. The Standard I/O Drawer requires one I/O connection.
   b. The High Performance I/O Drawer requires one and optionally up to four connections.

   Example - AlphaServer ES47/ES80 Model 8

Four 2 Processor System Building Block Drawers, one I/O connection each	= 4 I/O connections available
Two Standard I/O Drawers, one I/O connection each	= 2 I/O connections
One High Performance I/O Drawer with two I/O connections	= 2 I/O connections
Total I/O Drawer Connections	= 4 I/O connections used
3. One I/O connection cable is required for each connection between a 2 Processor System Building Block Drawer and I/O Drawer.

ES Options

	I/O Module for Connection to CPU in a System Building Block Drawer	I/O Buses	I/O Slots	Dual Redundant Power Supplies	USB/Ultra3 SCSI Adapter Card	DVD/ CD-RW Drive	Universal Slot for Disks	Part Number
Standard I/O Drawer, Expansion	1	3 PCI-X 1 AGP 4X	8 PCI-X 1 PCI, 3.3V; 2 PCI, 5V 1 AGP 4X	Yes	No	No	None	3X-BA70A-BA
Standard I/O Drawer, Master	1	3 PCI-X 1 AGP 4X	8 PCI-X 1 PCI, 3.3V; 2 PCI, 5V 1 AGP 4X	Yes	1 in PCI 3.3V Slot	1	2[4]	3X-BA70A-AA
High Performance I/O Drawer, Expansion	1 standard 3 additional, optional[1]	2 to 8 PCI-X	2 to 8 PCI-X	Yes	No	No	None	3X-BA70B-BA
High Performance I/O Drawer, Master	1 standard 3 additional, optional[1]	2 to 8 PCI-X	2 to 8 PCI-X	Yes	1 in PCI-X Slot	1	2[4]	3X-BA70B-AA
	Add-in I/O Module for High Performance I/O Drawers. Each module supports two PCI-X slots. Up to three modules may be added to the base High Performance I/O Drawer.							3X-KFMHA-AA
	I/O cable for connection between ES47/ES80 System Building Block Drawer and I/O Building Block Drawer; select one cable for each drawer ordered and one cable per Add-in I/O Module (3X-KFMHA-AA) if ordered.							3X-BNPCB-02

NOTES

1. One High Performance I/O Drawer can be used by up to four separate hard partitions. Each of the four I/O Connections (and two associated PCI-X slots) in the High Performance I/O Drawer can be independently controlled (e.g. power on/off) in conjunction with a separate partition.
2. A Master I/O Drawer consists of a Standard or High Performance I/O Drawer plus a Combination Adapter in one slot. The Combination Adapter provides an Ultra3 SCSI connection for two disks and a DVD/CD-RW drive in the drawer; plus a USB connection for keyboard, mouse, and monitor.
3. The two disks in the Master I/O Drawer can only be connected to the system via the Combination Adapter's Ultra3 SCSI connection. The I/O Drawer design does not permit connection from other storage adapters, such as a RAID adapter, that might be installed in the I/O Drawer.
4. Each Master I/O Drawer supports up to two, optional, hard disk drives. See the Disks step of the ES/GS Common Options section of this QuickSpec for the selection of supported disk drives.

Step 7 - Packaging and Power — Mandatory Choice

Step 7a - H9A40/H9A45 Racks

ES Options

The H9A40/H9A45 Racks are designed for the AlphaServer ES47/ES80/GS1280 product family. Large cable egresses have been built into the rack roof to allow for cabling out the top of the rack. These racks are 19-inch RETMA standard and accept HP StorageWorks, HP ProLiant, DS and other ES models of HP AlphaServers, plus third-party equipment.
See HP H9A40/H9A45 Racks QuickSpecs for details:
http://h18000.www1.hp.com/products/quickspecs/11636_div/11636_div.HTML

Configuration Guidelines

1. All ES47/ES80 Base Systems include all necessary hardware to mount the systems in an H9A40/H9A45 Rack.
2. All ES47/ES80 Base Systems include all required internal IEC/IEC power cords.
3. Each 3X-H9A45-ZD/3X-H9A40-ZA Rack includes one Cable/DSL Hub for platform management. The Hub included with the rack supports the first system mounted in the rack. Each ES47/ES80 system must have a SEPARATE, private platform management LAN to operate. An additional Hub is therefore required for each additional system to allow the platform management components of each system to communicate. The one exception to the mandatory Hub is the case of an ES47/ES80 Model 2 system without an external I/O drawer that may be managed via a console connection.

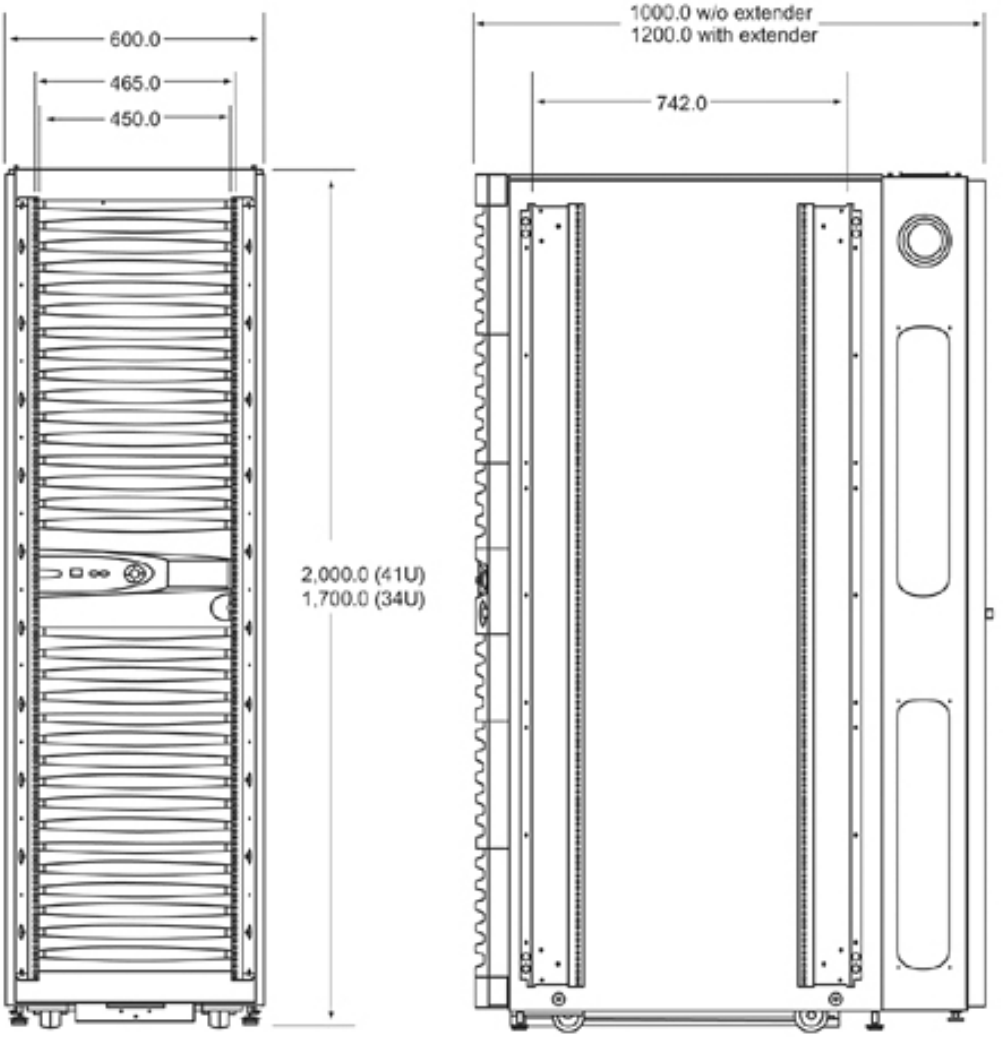

H9A40/H9A45 Racks

ES Options

Example configurations for H9A45 41U, 2m, Rack Requires one three-phase PDU (3X-H7606-AA/AB) or two single-phase PDUs (3X-H7609-DB/EB)										
	ES47/80 Model 2	ES47/80 Model 4	ES80 Model 6	ES80 Model 8	I/O Expansion Drawers	DS43xx Storage Works Shelves	Hubs for System Manage-ment	3 Phase PDU, 3X-H7606-AA/AB	Total Space Used in U's	Unused Space in 41U Rack
Size in U's	4	8	12	16	4	3	1	2.5		
One Model 2	1				0	0	1	1	8	33
Max Model 2's	7				0	0	7	1	38	3
Max Model 2's with I/O Drawers	4				4	0	4	1	39	2
One Model 4		1			0	0	1	1	12	29
Max Model 4's		4			0	0	4	1	39	2
Max Model 4's with I/O Drawers		2			4	1	2	1	40	1
One Model 6			1		0	0	1	1	16	25
Max Model 6's			2		0	4	2	1	41	0
Max Model 6's with I/O Drawers			1		3	4	1	1	40	1
One Model 8				1	0	0	1	1	20	21
Max Model 8's				2	0	1	2	1	40	1
Max Model 8's with I/O Drawers				1	4	1	1	1	39	2
NOTE: For AC feed redundancy on any configuration listed above, order a second three-phase PDU (3X-H7606-AA/AB) or third and fourth single-phase PDUs (3X-H7609-DB/EB).										

Example configurations for H9A40 34U, 1.7m, Rack Requires one three-phase PDU (3X-H7606-AA/AB) or two single-phase PDUs (3X-H7609-DB/EB)										
	ES47/80 Model 2	ES47/80 Model 4	ES80 Model 6	ES80 Model 8	I/O Expansion Drawers	DS43xx Storage Works Shelves	Hubs for System Manage-ment	3 Phase PDU, 3X-H7606-AA/AB	Total Space Used in U's	Unused Space in 34U Rack
Size in U's	4	8	12	16	4	3	1	2.5		
One Model 2	1				0	0	1	1	8	26
Max Model 2's	6				0	0	6	1	33	1
Max Model 2's with I/O Drawers	3				3	1	3	1	33	1
One Model 4		1			0	0	1	1	12	22
Max Model 4's		3			0	1	3	1	33	1
Max Model 4's with I/O Drawers		1			2	4	1	1	32	2
One Model 6			1		0	0	1	1	16	18
Max Model 6's			2		0	1	2	1	32	2
Max Model 6's with I/O Drawers			1		3	2	1	1	34	
One Model 8				1	0	0	1	1	20	14

Max Model 8's with I/O Drawers				1	3	0	1	1	32	2

NOTE: For AC feed redundancy on any configuration listed above, order a second three-phase PDU (3X-H7606-AA/AB) or third and fourth single-phase PDUs (3X-H7609-DB/EB).

H9A40/H9A45 Racks	41U, 2m Rack, carbon black - without OCP, with sidewalls - includes 200mm rack extender	3X-H9A45-ZD
	34U, 1.6m Rack, carbon black - without OCP, with sidewalls - includes 200mm rack extender	3X-H9A40-ZA
Factory Integration - Mandatory for H9A45/H9A40 Rack	Factory Integration of systems and storage devices assembled and configured in rack enclosure in predefined locations	YS-ASCAA-AA
Cable/DSL Hub - Optional One required for each additional ES47/ES80 system, after the first, in the same rack.	Cable/DSL 8-port Hub - required when more than one system is mounted in the same H9A40/H9A45 Rack	3X-DGHUB-AA

Power Distribution Units - Mandatory for H9A45/H9A40 Rack

Three-phase PDU, One Mandatory plus One Optional (for Dual AC feed redundancy)	Three-phase PDU for North America/Japan, 120/208V Y or 200V, 30A NEMA L21-30P plug; 3 x C19 outlets plus 24 x C13 outlets	3X-H7606-AA
	Three-phase PDU for International, 380/415V Y, IEC 309 32A; 3 x C19 outlets plus 24 x C13 outlets	3X-H7606-AB
or		
Single-phase PDU, Two Mandatory plus Two Optional (for Dual AC feed redundancy)	Single-phase PDU for North America/Japan 200-240V 20A input plug NEMA L620P; 16 outlets	3X-H7609-EB
	Single-phase PDU for International, 240V 20A input plug IEC309, 16 outlets	3X-H7609-DB

NOTE: The 3X-H7606-AA PDU uses an L21-30P 30 amp plug, Hubbell 2811, a 4 pin connector.

Step 7b - HP Rack 10000 G2 Series

The HP Rack 10000 Series were designed to the19-inch RETMA standard. The Racks accommodate all HP equipment (ProLiant, Alpha Systems, StorageWorks, UPS, and PDUs) in addition to select third-party equipment.
See HP Rack 10000 G2 Series QuickSpecs for details:
http://h18000.www1.hp.com/products/quickspecs/12402_div/12402_div.HTML

Configuration Guidelines

1. All ES47/ES80 Base Systems require a rack kit to mount ES47/ES80 systems in a 10000 G2 Series Rack (see below).
2. All ES47/ES80 Base Systems include all required internal IEC/IEC power cords.
3. The 10000 G2 Series Rack does not include a Cable/DSL Hub for platform management. Each ES47/ES80 system must have a SEPARATE, private platform management LAN to operate. A Hub is therefore required for each system to allow the platform management components of each system to communicate. The one exception to the mandatory Hub is the case of an ES47/ES80 Model 2 system without an external I/O drawer that may be managed via a console.

NOTE: The ES47/80 system and Rack 10000 G2 Series will ship separately. Installation and integration of the ES47/80 into the rack by HP requires purchase of field Installation Service.

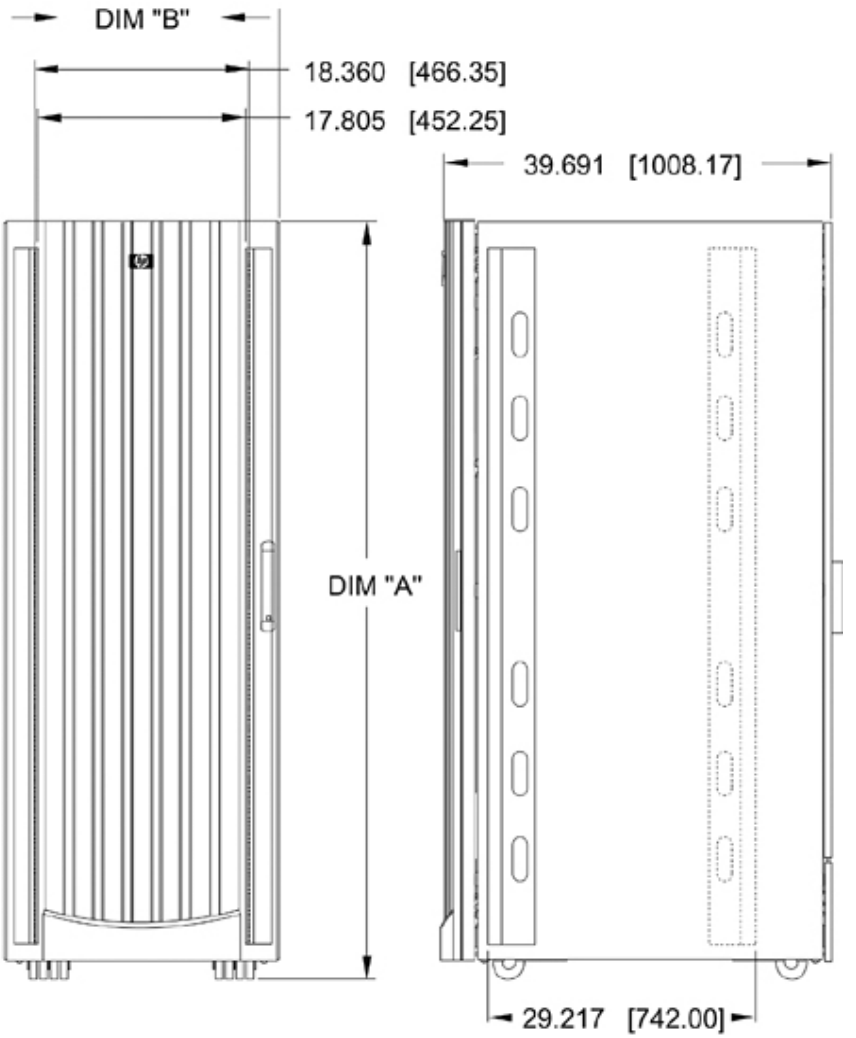

10000 G2 Series Rack, 42U
Dimension "A" — 78.838 [2002.50]
Dimension "B" — 24.125 [612.77]

10000 G2 Series Rack, 36U
Dimension "A" — 68.338 [1735.78]
Dimension "B" — 24.125 [612.77]

10000 G2 Series Rack, 22U
Dimension "A" — 43.838 [1113.48]
Dimension "B" — 24.125 [612.77]

ES Options

Example configurations for H9A40 34U, 1.7m, Rack Requires one three-phase PDU (3X-H7606-AA/AB) or two single-phase PDUs (3X-H7609-DB/EB)										
	ES47/80 Model 2	ES47/80 Model 4	ES80 Model 6	ES80 Model 8	I/O Expansion Drawers	DS43xx Storage Works Shelves	Hubs for System Manage-ment	3 Phase PDU, 3X-H7606-AA/AB	Total Space Used in U's	Unused Space in 42U Rack
Size in U's	4	8	12	16	4	3	1	2.5		
One Model 2	1				0	0	1	1	8	34
Max Model 2's	7				0	0	7	1	38	4
Max Model 2's with I/O Drawers	4				4	0	4	1	39	3
One Model 4		1			0	0	1	1	12	30
Max Model 4's		4			0	0	4	1	39	3
Max Model 4's with I/O Drawers		2			4	1	2	1	40	2
One Model 6			1		0	0	1	1	16	26
Max Model 6's			2		0	4	2	1	41	1
Max Model 6's with I/O Drawers			1		3	4	1	1	40	2
One Model 8				1	0	0	1	1	20	22
Max Model 8's				2	0	1	2	1	40	2
Max Model 8's with I/O Drawers				1	4	1	1	1	39	3
NOTE: For AC feed redundancy on any configuration listed above, order a second three-phase PDU (3X-H7606-AA/AB) or third and fourth single-phase PDUs (3X-H7609-DB/EB).										

10000 G2 Series Rack	10000 G2 Series 42U Rack – mandatory selection of three-phase or two single-phase Power Distribution Units required	AF004A
Rack Kit – Mandatory for 10000 G2 Series Rack	Order one per 2P System Building Block Drawer for mounting in 10000 G2 Series Rack	CK-BA60B-AR
Stabilizer Kit - Mandatory	Order one per 10000 G2 Series Rack	3R-A6892-AA or AF064A
Side Panel Kit – Mandatory Choice of Side Panel Kit or Baying Kit for 10000 G2 Series Rack	Order one per 10000 G2 Series Rack	AF054A
Baying Kit – Mandatory Choice of Side Panel Kit or Baying Kit for 10000 G2 Series Rack	Used to join two or more Series 10000 G2 Racks	3R-A3895-AA or 248931-B21
Cable/DSL Hub – Mandatory for each ES47/ES80 system mounted in a 10000 G2 Series Rack	Cable/DSL 8-port Hub – required	3X-DGHUB-AA
Power Distribution Units – Mandatory for 10000 G2 Series Rack		

ES Options

Three-phase PDU, One Mandatory plus One Optional (for Dual AC feed redundancy)	Three-phase PDU for North America/Japan, 120/208V Y or 200V, 30A NEMA L21-30P plug; 3 x C19 outlets plus 24 x C13 outlets	3X-H7606-AA
	Three-phase PDU for International, 380/415V Y, IEC 309 32A; 3 x C19 outlets plus 24 x C13 outlets	3X-H7606-AB
or		
Single-phase PDU, Two Mandatory plus Two Optional (for Dual AC feed redundancy)	Single-phase PDU for North America/Japan 200-240V 20A input plug NEMA L620P; 16 outlets	3X-H7609-EB
	Single-phase PDU for International, 240V 20A input plug IEC309, 16 outlets	3X-H7609-DB

Step 7c – Tower Enclosure or Other 19-inch RETMA Standard Racks

ES47 Tower Enclosure

Mandatory selection of two power cords required for each ES47 Tower system ordered.

North America, 110V	BN26J-1K
North America, 200 to 240V, 75 inch	BN18J-1K
North America, 200 to 240V, 108 inch	3X-BN64A-1C
Australia, New Zealand, 2.5-meter	3R-A6023-AA
Central Europe, 2.5-meter	BN19C-2E
Denmark, 2.5-meter	BN19K-2E
Egypt, India, South Africa, 2.5-meter	BN19S-2E
Israel, 1.9-meter	3R-A6883-AA
Italy, 2.5-meter	BM19M-2E
Japan, 2.5-meter, Dentori approved	3X-BN46F-02

ES47/ES80 Systems in Other 19-inch RETMA Standard Racks

AlphaServer ES47/ES80 rackmount systems may be ordered without a rack in order to mount in already installed HP racks, or other 19-inch RETMA standard racks. See Rack Specifications and Rackmount Kits in the ES/GS Common Options section of this QuickSpec for details on HP rack dimensions and a list of different rack mount kits that work with HP racks.

Configuration Guidelines

1. ES47/ES80 system must have a SEPARATE, private platform management LAN to operate. A Hub is therefore required for each system to allow the platform management components of each system to communicate. The one exception to the mandatory Hub is the case of an ES47/ES80 Model 2 system without an external I/O drawer that may be managed via a console.
2. Ensure that the rack or rack used to mount ES47/ES80 systems meets the depth/weight requirements a specified in the TechSpecs section.

Cable/DSL Hub - Mandatory for each ES47/ES80 system	Cable/DSL 8-port Hub - required	3X-DGHUB-AA

Hardware Options & Peripherals, Software, and Services for AlphaServers ES47, ES80, and GS1280

At A Glance

- This section serves as a reference for selection and configuration of currently available host based adapters and controllers, peripheral storage and load devices, operating system software add-on products, and services.
- For the complete list of all supported options (both currently available and retired) plus detailed configuration guidelines, refer to "Alpha Options:" http://h18002.www1.hp.com/alphaserver/products/options.html

ES/GS Common Options — Contents	
Reference 1	I/O Capacity for AlphaServer ES47/ES80 and AlphaServer GS1280 Systems
Reference 2	Adapter to Peripheral Cross Connect Table
Reference 3	Rack Specifications and Rackmount Kits
Step 1	Networks and Communications — Optional
Step 2	Memory Channel — Optional
Step 3	Storage Adapters/Controllers — Optional
Step 4	StorageWorks Enclosures for Disks and Tapes — Optional
Step 5	Disks — Optional
Step 6	Storage Systems — Optional
Step 7	Tape Drives — Optional
Step 8	Tape Storage Systems — Optional
Step 9	Storage Network Switches, Hubs, and Interconnects — Optional
Step 10	Keyboards, Mouse, Monitors, Power Cords — Optional
Step 11	Graphics Support — Optional
Step 12	System Software — Optional
Step 13	Hardware and Software Support Services — Optional

Reference 1 – I/O Capacity for AlphaServer ES47/ES80 and AlphaServer GS1280 Systems

ES/GS Common Options

AlphaServer ES47/ES80 and GS1280 systems offer three types of I/O bus standards for adapters and controllers.

1. PCI-X — Peripheral Component Interconnect Extended is a computer bus interface standard for connecting a microprocessor and attached devices. PCI-X doubles the speed and amount of data exchanged between the computer processor and peripherals from the predecessor PCI bus. PCI-X is backwards-compatible, meaning that users can, for example, install a PCI-X card in a standard PCI slot but expect a decrease in speed to 66 MHz or 33 MHz. Users can also use both PCI and PCI-X cards on the same PCI-X bus, but the bus will run at the speed of the slowest card. PCI-X is more fault tolerant than PCI. For example, PCI-X is able to reinitialize a faulty card or take it offline before computer failure occurs.
2. PCI — Peripheral Component Interconnect is a computer bus interface standard for connecting a microprocessor and attached devices.
3. AGP 4 — Accelerated Graphics Port (AGP) is an interface specification that enables 3-D graphics to display quickly. It is especially useful in conjunction with three-dimensional (3D) video, and sophisticated scientific and engineering graphics programs. AGP runs at several times the bus speed of conventional Peripheral Component Interconnect (PCI). Because of this, the data transfer rate using AGP is significantly greater than with PCI video cards. The AGP 4X mode provides high performance levels with a peak bandwidth of 1066 MB/s. AGP 4X mode is a superset to the 1X and 2X modes; thus, all components supporting AGP 4X must also support 1X and 2X modes.

The following table presents the matrix of maximum, theoretical I/O throughput for the different standards. Actual I/O throughput will be less than calculated because of protocol overhead and contention for bus capacity.

Calculated Maximum Throughput	32-bit data path	64-bit data path
PCI, 33 MHz	0.133 GB/s	0.267 GB/s
PCI or PCI-X, 66 MHz	0.267 GB/s	0.533 GB/s
PCI-X, 100 MHz	N/A	0.8 GB/s
PCI-X, 133 MHz	N/A	1.067 GB/s

Calculated Maximum Throughput	1X	2X	4X
AGP	0.133 GB/s	0.267 GB/s	1.067 GB/s

Overall System Capacities for I/O Adapters and Controllers

ES/GS Common Options

	ES47 Tower or Workstation	ES47	ES80	GS1280
Maximum Hard Partitions per system	1	2	4	32
	Maximum Quantity Tested & Supported			
	per system	per system	per system	per hard partition: per system
Maximum 2P Building Block Drawers per System	1	2	4	N/A
PCI-X/PCI slots in 2P Drawers	5	10	20	N/A
133-MHz PCI-X/PCI slots in 2P Drawers		2	4	N/A
AGP slots in 2P Drawers	1	2	4	N/A
Maximum External I/O Connections	0	2	4	32 : 64
Maximum Standard I/O Drawers (One I/O connection per drawer)	0	2	4	32 : 64
PCI-X/PCI slots in Standard I/O Drawers		18	36	288 : 576
5V PCI slots in Standard I/O Drawers		4	8	64 : 128
AGP slots in Standard I/O Drawers		2	4	32 : 64
Maximum High Performance I/O Drawers (One I/O connection per drawer)	0	2	4	32 : 64
Maximum High Performance I/O Drawers (Four I/O connections per drawer)	0	1	1	8 : 16
133-MHz PCI-X/PCI slots in High Performance I/O Drawers		4	8	64 : 128
Total Slots	per system	per system	per system	per hard partition: per system
PCI-X/PCI slots	5	28	56	288 : 576
133-MHz PCI-X/PCI slots	1	4	8	32: 128
5V PCI slots		4	8	32 : 64
AGP slots	1	4	8	32 : 64
Maximum Possible Slots (PCI-X/PCI plus 5V PCI plus AGP slots)	6	36	72	384 : 768

I/O for Two-processor System Building Block Drawer used in ES47 and ES80 Systems

ES/GS Common Options

- For PCI-X capable slots:
  - All universal or 3.3V PCI and PCI-X cards are supported,
    - EXCEPT: UltraSCSI wide differential adapter, 32-bit/33-MHz PCI adapter (3X-KZPBA-CC)
  - PCI-X protocol is used on the bus, but reverts to PCI protocol in these cases:
    - When one or more PCI cards are in a bus segment
    - Gigabit Ethernet, Rev A (DEGXA-SA/TA) is in the bus segment
- An I/O bus segment will operate at the least common denominator of the adapters installed or the lower speeds dictated by bus loading (as shown in the tables), whichever is less.
- The PCI-X card slots must be populated contiguously starting with slot 1; otherwise the bus will run at 33 MHz PCI.

2P Building Block Drawer Slot Specifications

Port (Bus) #	Slot #	Maximum Bus Speed	Signal Voltage	Bus Loading, Adapters Installed (contiguously starting with Slot 1)	Max Bus Speed
0	1	133 MHz	3.3V	1 PCI 1 PCI-X	66 MHz 133 MHz
1	1	66 MHz	3.3V	1 or 2 PCI 3 or 4 PCI 1 to 4 PCI-X	66 MHz 50 MHz 66 MHz
	2	66 MHz	3.3V		
	3	66 MHz	3.3V		
	4	66 MHz	3.3V		
3	1	4X AGP	1.5V	1 AGP	4X

Standard I/O Drawer used in ES47, ES80, and GS1280 Systems

- For PCI-X capable slots:
  - All universal or 3.3V PCI and PCI-X cards are supported,
    EXCEPT: UltraSCSI wide differential adapter, 32-bit/33-MHz PCI adapter (3X-KZPBA-CC)
  - PCI-X protocol is used on the bus, but reverts to PCI protocol in these cases:
    - When one or more PCI cards are in a bus segment
    - With more than five (5) cards in a bus segment
    - Gigabit Ethernet, Rev A (DEGXA-SA/TA) is in the bus segment
- PCI 5V slots support ONLY:
  - For cluster support, CI host bus adapter (CIPCA-BA)
  - A legacy UltraSCSI wide differential adapter 32-bit/33-MHz PCI adapter (3X-KZPBA-CC)
- An I/O bus segment will operate at the least common denominator of the adapters installed or the lower speeds dictated by bus loading (as shown in the tables), whichever is less.
- The PCI-X card slots must be populated contiguously starting with slot 1; otherwise the bus will run at 33-MHz PCI.

ES/GS Common Options

Standard I/O Building Block Drawer Slot Specifications					
Port (Bus) #	Slot #	Maximum Bus Speed	Signal Voltage	Bus Loading, Adapters Installed (contiguously starting with Slot 1)	Max Bus Speed
0	1	100 MHz	3.3V	1 PCI 1 PCI-X 2 or 3 PCI[1]	66 MHz 100 MHz 33 MHz
	2	33 MHz	5.0V[3]		
	3	33 MHz	5.0V[3]		
1	1	133 MHz	3.3V	1 PCI-X 2 PCI-X 1 or 2 PCI	133 MHz 100 MHz 66 MHz
	2	133 MHz	3.3V		
2	1	66 MHz	3.3V	1 to 3 PCI[2] 4 or 5 PCI 6 PCI 1 to 5 PCI-X 6 PCI-X	66 MHz 50 MHz 33 MHz 66 MHz 33 MHz
	2	66 MHz	3.3V		
	3	66 MHz	3.3V		
	4	66 MHz	3.3V		
	5	66 MHz	3.3V		
	6	66 MHz	3.3V		
3	1	4X AGP	1.5V	1 AGP	4X

1. Modules designed for 3.3V signaling and 66-MHz bus speed cannot operate in Port 0 - slots 2 and 3.
2. In Port 2 of a Standard I/O Drawer, if PBXGG-AA (RADEON PCI Graphics adapter) is installed together with another card instead of 66 MHz, the bus will run at 50 MHz maximum. If RADEON is alone in slot 1, the bus will run at 66 MHz.
3. For Port 0, slots 2 and 3 are keyed for 5V adapters

High Performance I/O Drawer used in ES47, ES80, and GS1280 Systems

- All universal or 3.3V PCI and PCI-X cards are supported,
  EXCEPT: UltraSCSI wide differential adapter, 32-bit/33-MHz PCI adapter (3X-KZPBA-CC)
- PCI-X protocol is used on the bus, but reverts to PCI protocol in these cases:
  - When a PCI card is in the slot
  - When Gigabit Ethernet, Rev A (DEGXA-SA/TA) is in the slot

High-performance I/O Drawer Slots Specifications						
I/O Connection to EV7 Processor	Port (Bus) #	Slot #	Maximum Bus Speed	Signal Voltage	Bus Loading, Adapters Installed (contiguously starting with Slot 1)	Max Bus Speed
0	1	Slot 1	133 MHz	3.3V	For each slot 1 PCI 1 PCI-X	66 MHz 133 MHz
0	2	Slot 1	133 MHz	3.3V		
1	1	Slot 1	133 MHz	3.3V		
1	2	Slot 1	133 MHz	3.3V		
2	1	Slot 1	133 MHz	3.3V		
2	2	Slot 1	133 MHz	3.3V		
3	1	Slot 1	133 MHz	3.3V		
3	2	Slot 1	133 MHz	3.3V		

Reference 2 – Adapter to Peripheral Cross Connect Table

	SCSI Ultra3 LVD	SCSI Ultra2 LVD	Ultra3 SCSI Backplane RAID, 2 or 4 channel	U320 LVD SCSI Backplane RAID, 2 or 4 channel
	3X-KZPEA-DB	3X-KZPCA-AA	3X-KZPDC-BE/DF	3X-KZPEC-BF/DG
MSA30 Rack Disk & Tape Drive Enclosure	Yes	Yes	Yes	Yes
4300 Rack Disk & Tape Drive Enclosure	Yes	Yes	Yes	Yes
1U Rackmount Tape Drive Enclosure	Yes	Yes	no	no
3U Rackmount Tape Drive Enclosure	Yes	Yes	no	no
MSA1000 Storage System	no	no	no	no
HP StorageWorks Enterprise Virtual Arrays; EVA4000; EVA6000; EVA8000	no	no	no	no
HP StorageWorks Disk Arrays; xp10000; xp12000	no	no	no	no
DAT Tape Drives; 40; 72	Yes	Yes	no	no
DLT VS Tape Drives; 80; 160	Yes	Yes	no	no
Ultrium LTO Tape Drives; 232; 448; 920, 460; 960	Yes	Yes	no	no
SDLT Tape Drive; 320; 600	Yes	Yes	no	no
DAT 72/10 Autoloader	Yes	Yes	no	no
1/8 Autoloader; Ultrium 232, 448, 960	Yes	Yes	no	no
MSL2024/4048 Tape Libraries	Yes	Yes	no	no
MSL6000 Tape Libraries	Yes	Yes	no	no
ESL E-Series Tape Libraries	Yes	Yes	no	no
VSL 6000 Virtual Library System	no	no	no	no

Cross Connect Table	2-Gbit Fibre Channel Adapter, single channel, PCI-X LP10000, FCA2684	2-Gbit Fibre Channel Adapter, dual channel, PCI-X LP10000, FCA2684DC
	DS-A5132-AA	DS-A5134-AA
MSA30 Rack Disk & Tape Drive Enclosure	no	no
4300 Rack Disk & Tape Drive Enclosure	no	no
1U Rackmount Tape Drive Enclosure	no	no
3U Rackmount Tape Drive Enclosure	no	no
MSA1000 Storage System	Yes[1]	Yes[1]
HP StorageWorks Enterprise Virtual Arrays; EVA4000; EVA6000; EVA8000	Yes[1]	Yes[1]
HP StorageWorks Disk Arrays; xp10000; xp12000	Yes[1]	Yes[1]
DAT Tape Drives; 40; 72	Yes[1]	Yes[1]
DLT VS Tape Drives; 80; 160	Yes[1]	Yes[1]
Ultrium LTO Tape Drives; 232; 448; 920, 460; 960	Yes[1]	Yes[1]
SDLT Tape Drive; 320; 600	Yes[1]	Yes[1]
DAT 72/10 Autoloaders	Yes[1]	Yes[1]
1/8 Autoloader; Ultrium 232, 448, 960	Yes[1]	Yes[1]
MSL2024/4048 Tape Libraries	Yes[1]	Yes[1]
MSL6000 Tape Libraries	Yes[1]	Yes[1]

ESL E-Series Tape Libraries	no	no
VSL 6000 Virtual Library System	Yes	Yes
NOTE 1: Fibre Channel connection to a SCSI tape device requires a Network Storage Router (NSR) (see Step 8) in a Storage Area Network (SAN).		

Reference 3 – Rack Specifications and Rackmount Kits

High-performance I/O Drawer slots specifications:						
HP Racks	H9A10	H9A15	9142	10642	H9A45-ZA	H9A45-ZD
	M-series	M-series	Series 9000	Series 10000	For GS1280 (includes Operator Control Panel (OCP))	For ES47/80 (no OCP)
Vertical Rack Capacity	59.5"	71.75"	73.5"	73.5"	71.75"	71.75"
(1.75" per Rack Unit)	34U	41U	42U	42U	41U	41U
Rail Spacing	19 inch	19 inch	19 inch	19 inch	19 inch	19 inch
(side-to-side)	RETMA	RETMA	RETMA	RETMA	RETMA	RETMA
Rail Spacing (front-to-back)	25 inches	25 inches	29 inches	29 inches	29 inches	29 inches
Hole Pattern	0.281" Round	0.281" Round	Euro-Square	Euro-Square	Euro-Square	Euro-Square
	RETMA	RETMA	RETMA	RETMA	RETMA	RETMA
Max Payload (spec'd)	1000 lbs	1000 lbs	1200 lbs	1600 lbs	1600 lbs	1600 lbs
(equipment weight only, dynamic)	454 kg	454 kg	544 kg	720 kg	720 kg	720 kg
Height	66.9"	78.7"	78.7"	78.7"	78.7"	78.7"
(external dim w/o packaging)	1700 mm	2 meters	2 meters	2 meters	2 meters	2 meters
Width	23.6"	23.6"	23.7"	23.7"	23.6"	23.6"
(external dim w/o packaging)	600 mm	600 mm	603 mm	603 mm	600 mm	603 mm
Depth w/o Extender	36.1"	36.1"	35.8"	39.7"	NA	39.4"
(external dim w/o packaging)	916 mm	916 mm	909 mm	1009 mm		1000 mm
Depth w Rear Extender	41.5"	41.5"	39.7"	Not Available	48.1"	Optional
(external dim w/o packaging)	1054 mm	1054 mm	1009 mm		1222 mm	
Useable Depth	31.7"	31.7"	30"	35.25"	40.25"	32.25"
(front rail to back door)	804 mm	804 mm	762 mm	895 mm	1022 mm	819 mm
Usable Depth w/Extender	37.1"	37.1"	33.9"	NA	NA	40.25
(front rail to back door)	943 mm	943 mm	862 mm			1022 mm
Side Panels	Standard	Standard	Standard	Standard	Standard	Standard
Stabilizer	Single Deployable	Dual Deployable	Single Deployable	Single Deployable	Heavy duty Deployable	None

ES/GS Common Options

Top Cover	Vented	Vented	Vented	Vented	Vented	Vented
Rear Door	Standard w/Lock	Standard w/Lock	Standard Short w/Lock	Split Long door w/Lock	Standard w/Lock	Standard w/Lock
Front Door	Optional Kit w/Lock	Optional Kit w/Lock	Standard w/Lock	Standard w/Lock	Standard w/Lock	Standard w/Lock
Front Trim Kit	Required if no Front Door	Required if no Front Door	Standard w/Lock	Not Available	Not Available	Not Available
PDUs	Standard	Standard	Optional	Optional	Optional	Optional
Joiner Kit (aka Baying Kit)	Optional	Optional	Optional	Optional	NA	NA
Shipping Height	76.4"	84.4"	84.4"	86.22"	84.75"	84.75"
(external dim with packaging)	1940 mm	2144 mm	2144 mm	2190 mm	2153 mm	2153 mm
Shipping Width	36"	36"	36"	32"	43.1"	43.1"
(external dim with packaging)	914 mm	914 mm	914 mm	812.8 mm	1096 mm	1096 mm
Shipping Depth	53.75"	53.75"	48"	48"	48"	48"
(external dim with packaging)	1366 mm	1366 mm	1219 mm	1219 mm	1219 mm	1219 mm
Shipping Weight	325 lbs	355 lbs	445 lbs	284 lbs	570 lbs	570 lbs
(empty cab with full packaging)	147 kg	161 kg	202 kg	129 kg	259 kg	259 kg
RACKMOUNT KITS						
DS15	3X-PBX01-DA	3X-PBX01-DA	3X-PBX01-DB	3X-PBX01-DB	3X-PBX01-DB[1]	3X-PBX01-DB[1]
DS25	3X-BA57R-RA	3X-BA57R-RA	3X-BA57R-RC	3X-BA57R-RC	3X-BA57R-RC[1]	3X-BA57R-RC[1]
ES45	BA61R-CR	BA61R-CR	3X-BA61R-RD	3X-BA61R-RD	3X-BA61R-RD[1]	3X-BA61R-RD[1]
ES47	No kit available	No kit available	No kit available	CK-BA60B-AR	Included	Included
ES80	No kit available	No kit available	No kit available	CK-BA60B-AR	Included	Included
Mem. Channel 2	3X-BA61R-MC	3X-BA61R-MC	3X-BA61R-MD	3X-BA61R-MD	3X-BA61R-MD	3X-BA61R-MD
3U LVD enclosure	3R-A3804-AA	3R-A3804-AA	Included	Included	Included	Included
5U LVD/MSL5000 enclosure	254795-001	254795-001	Included	Included	Included	Included
StorageWorks 4315/4354	Included	Included	Included	Included	Included	Included
MSA30/MSA1000	3R-A5281-AA	3R-A5281-AA	Standard	Standard	Standard	Standard

NOTES:

1. HP will not install system in the rack at the factory unless optional integration services are purchased.
2. System/E racks are not configurable with AlphaServers.

Step 1 - Networks and Communications — Optional

Step 1a - Ethernet — Optional

NOTE: If an Ethernet NIC is not selected, at least one I/O slot in the system must remain open for connection of the system to the factory test network.

ES/GS Common Options

Description	Device Type	Part Number	Maximum Quantity Tested & Supported U=Tru64 UNIX O=OpenVMS L=Redhat V7.2 Linux			
			per system	per hard partition: per system		
			ES47 Tower Workstation	ES47	ES80	GS1280
Ethernet Network Interface Cards						
Gigabit Ethernet NIC, Twisted-Pair Copper with single-port RJ45, 10/100/1000 Mbps Use BN25G, BN26M, BN24Q, BN28Q, or equivalent cables with RJ45 connectors.	PCI-X 3.3V, 64 b, 133 MHz	3X-DEGXA-TR	5/U 5/O 1/L	16:28/U 16:28/O 1:2L	16:56/U 16:56/O 1:4/L	16:512/U 16:512/O
Gigabit Ethernet NIC, Fiber with duplex-SC connectors, 1000 Mbps only. Use BN34B, or equivalent cables with SC connectors.	PCI-X 3.3V, 64 b, 133 MHz	3X-DEGXA-SR	5/U 5/O 1/L	16:28/U 16:28/O 1:2L	16:56/U 16:56/O 1:4/L	16:512/U 16:512/O
10/100 Ethernet (dual-port UTP/RJ45s) NIC and Base Module. Use BN25G, BN26M, BN24Q, or BN28Q twisted pair RJ45 cables. (Optional, add-on daughter cards 3X-DE602-TR or 3X-DE602-FR)	PCI 3.3V, 64 b, 66 MHz	3X-DE602-BR	5/U 5/O 1/L	8:16/U 8:16/O 1:2L	8:32/U 8:32/O 1:4/L	8:256/U 8:256/O
10/100 Ethernet (dual-port UTP/RJ45s) add-on to 3X-DE602-BR only. Total of four ports for combined 3X-DE602-BR and 3X-DE602-TR modules. Use BN25G, BN26M, BN24Q, BN28Q, or equivalent cables with RJ45 connectors. NOTE: 3X-DE602-TR cannot be used standalone.		3X-DE602-TR				
Single-port 100 Mbps (MMF/duplex-SC) add-on daughter card for use with the 3X-DE602-BR. Combined 3X-DE602-BR and 3X-DE602-FR provides two 10/100 (UTP/RJ45s) and one 100Mbps (MMF/SC) ports. Use BN34B cables. NOTE: 3X-DE602-FR cannot be used standalone.		3X-DE602-FR				

Step 1b - Networks and Communications — Optional

ES/GS Common Options

Description	Device Type	Part Number	Maximum Quantity Tested & Supported			
			U=Tru64 UNIX O=OpenVMS L=Redhat V7.2 Linux			
			per system	per hard partition: per system		
			ES47 Tower Workstation	ES47	ES80	GS1280
Synchronous Communications Network Interface Cards						
Dual-port Intelligent Synchronous Communications NIC; requires one or two BC3xx sync cables.	PCI 3.3V, 32 b, 33 MHz	3X-PBXDD-AA	4/U 4/O	4:8/U 4:8/O	4:16/U 4:16/O	4:128/U 4:128/O
Quad-port Intelligent Synchronous Communications NIC; requires one to four BC3xx sync cables.	PCI 3.3V, 32 b, 33 MHz	3X-PBXDD-AB	4/U 4/O	4:8/U 4:8/O	4:16/U 4:16/O	4:128/U 4:128/O
Asynchronous Communications Network Interface Cards						
4-port Async Communications NIC with DB-25 cable	PCI 3.3V, 32 b, 33 MHz	PBXDA-BA	2/U 2/O	2:4/U 2:4/O	2:8/U 2:8/O	2:64/U 2:64/O
8-port Async Communications NIC	PCI 3.3V, 32 b, 33 MHz	PBXDA-BB	2/U 2/O	2:4/U 2:4/O	2:8/U 2:8/O	2:64/U 2:64/O
16-port Async Communications Controller and rackmount 16-port distribution box with RJ45 connectors	PCI 3.3V, 32 b, 33 MHz	PBXDA-AC	2/U 2/O	2:4/U 2:4/O	2:8/U 2:8/O	2:64/U 2:64/O

Cables for Ethernet, ATM, Synchronous, and Asynchronous Network Interface Cards	Multimode fiber optic (MMF) 62.5/125um duplex cable, with SC-to-SC connectors. xx = 2E, 4E, 01, 03, 10, 20, 30 for 2.4, 4.5, 1, 3, 10, 20, and 30 meters	BN34B-xx
	Category 5e (4-Unshielded Twisted Pairs / UTP) straight-through cable with RJ45-to-RJ45 connectors for system to switch, repeater, or hub connectivity. xx = 0B, 0E, 01, 03, 04, 07 for 0.2, 0.5, 1, 3, 4, and 7 meters	BN25G-xx
	Category 5e (4-Twisted Pairs, Screened/ ScTP) straight-through cable with RJ45-to-RJ45 connectors for system to switch, repeater, or hub connectivity. xx = 0B, 0E, 01, 03, 04, 07 for 0.2, 0.5, 1, 3, 4, and 7 meters	BN26M-xx
	Category 5e (4-Unshielded Twisted Pairs / UTP) Xover cable with RJ45-to-RJ45 connectors for system to switch, repeater, or hub connectivity. xx = 0E, 01, 03, 04, 07 for 0.5, 1, 3, 4, and 7 meters	BN24Q-xx
	Category 5e (4-Twisted Pairs, Screened / ScTP) Xover cable with RJ45-to-RJ45 connectors for system to switch, repeater, or hub connectivity. xx = 0E, 01, 03, 04, 07 for 0.5, 1, 3, 4, and 7 meters	BN28Q-xx
	EIA-530 Single-port synchronous cable	3X-BC34G-06
	V.24/EIA-232 Single-port synchronous cable	3X-BC34L-06
	V.11/x.21 Single-port synchronous cable	3X-BC33S-06
	V.35 Single-port synchronous cable	3X-BC34T-06
	RJ45-to-DB-25 Asynchronous Converter Cable	CXI01-AC

Step 2 - MEMORY CHANNEL — Optional

Configuration Guidelines

1. Each Memory Channel adapter must be the only device on the PCI/PCI-X bus segment.
2. Two-node clusters can be configured by ordering one adapter (CCMAB-BA) for each node and one cable (BN39B-04 or BN39B-10) between the two systems.
3. For a two-node cluster that will not need to be rebooted when adding additional members, order one adapter (CCMAB-BA) and one cable (BN39B-04 or BN39B-10) for each node plus one hub (CCMHB-AA) for the cluster.
4. For three or four node clusters, order one adapter (CCMAB-BA) and one cable (BN39B-04 or BN39B-10) for each node and one hub (CCMHB-AA) for the cluster.
5. The hub (CCMHB-AA) includes four line cards and supports up to four nodes; expansion up to eight system nodes can be achieved by adding up to four line cards (CCMLB-AA).
6. If two adapters (CCMAB-BA) are configured in each system, a second hub (CCMHB-AA) is required.
7. If nodes must be separated by a distance longer than standard copper cables allow, the CCMFB option converts the output of the standard controller or line card to single-mode fiber optic cable. The fiber optic connection may be up to 2,000 meters long between two controllers connected in virtual hub mode, or 3,000 meters between a controller and a hub. (The connection from the hub to a second system may also be 3,000 meters.) The CCMFB option requires a second PCI slot in the system from which it draws power only. It is normally connected to the corresponding controller with the short cable, BN39B-01. The CCMFB option is also used in the hub where it occupies a slot normally used by a line card, limiting expansion to four radial fiber optic connections.
8. The hub expansion box (CCMHB-BA) provides additional slots for up to eight fiber optic connections. Two standard length single-mode fiber optic cables are available (BN34R-10 and BN34R-31); however, users normally provide this fiber optic connection. Fiber optic connectivity is completely transparent to the systems using it and has no performance impact

Description	Device Type	Part Number	Maximum Quantity Tested & Supported			
			U=Tru64 UNIX O=OpenVMS L=Redhat V7.2 Linux			
			per system	per hard partition: per system		
			ES47 Tower Workstation	ES47	ES80	GS1280
Memory Channel Adapter						
Memory Channel Adapter	PCI 5.0/3.3V, 32 b, 33 MHz	CCMAB-BA	2/U 2/O	2:4/U 2:4/O	2:8/U 2:8/O	2:64/U 2:64/O
Copper-to-single mode fiber optic converter	PCI 5.0/3.3V, 32 b, 33 MHz	CCMFB-BA	2/U 2/O	2:4/U 2:4/O	2:8/U 2:8/O	2:64/U 2:64/O

ES/GS Common Options

Infrastructure for Memory Channel	System Area Network Hub with four line cards; includes BN19P-1K` power cord for Canada, Japan, and U.S. For other regions, order appropriate power cord from list that follows.	CCMHB-AA
	Hub expansion box with no line cards	CCMHB-BA
	Expansion line card for CCMHB hub	CCMLB-AA
	1-meter cable for CCMAB and CCMHB	BN39B-01
	4-meter cable for CCMAB and CCMHB	BN39B-04
	7-meter cable for CCMAB and CCMHB	BN39B-07
	10-meter cable for CCMAB and CCMHB	BN39B-10
	Rackmount kit (3U) for CCMHB (Memory Channel Hub II); required for mounting in H9A40/H9A45 Cabinets and Series 10000 Racks.	3X-BA61R-MD
	Power cord for rackmount CCMHB hub	BN35S-02

Country-specific Power Cords for Standalone MEMORY CHANNEL Hubs	Australia, New Zealand	3R-A6023-AA
	Central Europe	BN19C-2E
	Denmark	BN19K-2E
	Egypt, India	BN19S-2E
	Ireland, United Kingdom	BN19A-2E
	Israel	3R-A6883-AA
	Italy	BN19M-2E
	Japan, 2.5-meter, Dentori approved	3X-BN46F-02
	Switzerland	BN19E-2E

Step 3 - Storage Adapters/Controllers — Optional

Description	Device Type	Part Number	Maximum Quantity Tested & Supported			
			U=Tru64 UNIX O=OpenVMS L=Redhat V7.2 Linux			
			per system	per hard partition: per system		
			ES47 Tower Workstation	ES47	ES80	GS1280
SCSI Adapters						
Ultra3 (LVD) SCSI adapter, dual-channel. Requires 3X-BC56J-xx cable. Restrictions: HSZxx RAID controllers not supported; Tru64 UNIX requires a graphics adapter to run console utilities (RUN BIOS).	PCI, 3.3V, 64b, 66 MHz	3X-KZPEA-DB	5/U 5/O 1/L Shared Bus 5/U 0/O	28:28/U 12:24/O 1:2/L Shared Bus 6:12/U 0/O	32:56/U 12:48/O 1:4/L Shared Bus 6:24/U 0/O	32:576/U 12:384/O 0/L Shared Bus 6:192/U 0/O
Ultra2 (LVD) SCSI adapter, single-channel. Requires BN38C-xx cable. Restrictions: HSZxx RAID controllers not supported. No support for shared SCSI.	PCI, 3.3/5.0V Universal, 32b, 33 MHz	3X-KZPCA-AA	5/U 5/O 1/L	8:16/U 8:16/O 1:2/L	8:32/U 8:32/O 1:4/L	8:256/U 8:256/O 0/L

ES/GS Common Options

Backplane RAID SCSI Controllers						
U320 LVD SCSI Backplane Raid Controller, 64 bit, 2 Channel	PCI-X, 3.3V, 64b 133 MHz	3X-KZPEC-BF	5/O	8:16/O	8:32/O	8:256/O
U320 LVD SCSI Backplane Raid Controller, 64 bit, 4 Channel	PCI-X, 3.3V, 64b 133 MHz	3X-KZPEC-DG	5/O	8:16/O	8:32/O	8:256/O
Ultra3 SCSI, 2-channel, RAID controller	PCI, 3.3V, 64b, 66 MHz	3X-KZPDC-BE	5/U 5/O 1/L	8:16/U 8:16/O 1:2/L	8:32/U 8:32/O 1:4/L	8:256/U 8:256/O 0/L
Ultra3 SCSI, 4-channel, RAID controller	PCI, 3.3V, 64b, 66 MHz	3X-KZPDC-DF	5/U 5/O 1/L	8:16/U 8:16/O 1:2/L	8:32/U 8:32/O 1:4/L	8:256/U 8:256/O 0/L

Cables for SCSI and Backplane RAID Controllers	Ultra3 SCSI cable, VHDCI to VHDCI; xx = 02, 03, 04, meters	3X-BC56J-xx
	Ultra2 SCSI 68-pin HD male-to-VHDCI male cable; xx = 02, 03, 05, 10, 20 meters	BN38C-xx

Description	Device Type	Part Number	Maximum Quantity Tested & Supported U=Tru64 UNIX O=OpenVMS L=Redhat V7.2 Linux			
			per system	per hard partition: per system		
			ES47 Tower Workstation	ES47	ES80	GS1280
Fibre Channel Controllers						
2-Gbit Fibre Channel Adapter, single channel, PCI-X LP10000, FCA2684	PCI-X, 3.3/5.0V Universal, 64b, 133 MHz	DS-A5132-AA	5/U 5/O	28:28/U 26:28/O	56:56/U 26:56/O	64:576/U 26:576/O
2-Gbit Fibre Channel Adapter, dual channel, PCI-X LP10000, FCA2684DC	PCI-X, 3.3/5.0V Universal, 64b, 133 MHz	DS-A5134-AA	5/U 5/O	28:28/U 13:26/O	32:56/U 13:56/O	32:576/U 13:416/O
CIPCA Adapter						
Computer Interconnect (CI) adapter; each CI adapter requires a Standard I/O Building Block Drawer with 5V PCI slots.	PCI, 5V, 32b, 33 MHz, two slots	CIPCA-BA		2:2/O	4:4/O	12:64/O

Cables for Fibre Channel	Fibre Channel SC-SC cables (BNGBX-xx); xx=02, 03, 05, 10, 15, 30, 50 meters	BNGBX-xx

Step 4 – StorageWorks Enclosures for Disks and Tapes — Optional

HP StorageWorks Modular Smart Array 30 Enclosure (formerly known as HP StorageWorks 4400 Enclosure)

The HP StorageWorks Modular Smart Array 30 (MSA30) Enclosure is an Ultra320 SCSI disk drive storage enclosure. The drive carrier is designed to support Ultra320, Ultra3, and Ultra2 hard drives; and DAT tape drives on the same SCSI bus. StorageWorks 4200 or StorageWorks 4300 may be upgraded to the MSA30.
See **HP StorageWorks Modular Smart Array 30 Enclosure QuickSpecs** for configuration details:
http://h18000.www1.hp.com/products/quickspecs/11738_div/11738_div.HTML
See **HP StorageWorks Modular Smart Array 30 Multi-Initiator Enclosure QuickSpecs** for configuration details:
http://h18000.www1.hp.com/products/quickspecs/11967_div/11967_div.html

Model MSA30, Single-bus	Rackmount, 14-drive enclosure with single bus, dual power supplies	3R-A4075-AA
Model MSA30, Dual-bus	Rackmount, 14-drive enclosure with dual bus, dual power supplies NOTE: Not supported for shared bus operation.	3R-A4076-AA
Model MSA30 Multi-Initiator (Shared)	Rackmount, 14-drive enclosure with dual bus, multi-initiator shared access, and dual power supplies. NOTE: Use SCSI Ultra3 LVD host adapter (3X-KZPEA-DB) for shared bus operation.	359645-B21

HP StorageWorks 4300 Enclosure

The HP StorageWorks Enclosure 4300 is an Ultra3 SCSI disk drive storage enclosure. The drive carrier is designed to support Ultra3 and Ultra2 hard drives and DAT Tape Drives on the same SCSI bus.
See **HP StorageWorks 4300 Enclosure QuickSpecs** for configuration details:
http://h18000.www1.hp.com/products/quickspecs/10624_div/10624_div.HTML
NOTE: The depth of a 4300 shelf does not allow front and rear mounting.

Model 4314R	Rackmountable 14-drive enclosure with single bus, single power supply	DS-SL13R-Ax
Model 4354R	Rackmountable 14-drive enclosure with dual bus, dual power supplies	DS-SL13R-Bx

HP StorageWorks Rackmount Tape Drive Enclosures

The 1U and 3U Rackmount Kits are rackmount tape drive enclosures for direct-attach SCSI backup and archiving applications.
See **HP StorageWorks Rack-Mount Tape Drive Kits QuickSpecs** for configuration details:
http://h18000.www1.hp.com/products/quickspecs/10854_div/10854_div.HTML

1U Rackmount Tape Drive Enclosure	• Supports up to two internal half-height devices including: DAT 40, and DAT 72 Tape Drives • DLT VS80, DLT VS160 Tape Drives • Ultrium 232 and 448 Tape Drives	A7445B
3U Rackmount Tape Drive Enclosure	Wide SCSI LVD rackmount enclosure. Supports up to two internal, full-height or four internal, half-height devices including: • DAT 40, and DAT 72 Tape Drives • DAT 72x6 Tape Autoloader • DLT VS80, DLT VS160 Tape Drives • SDLT 320, SDLT 600 Tape Drives • Ultrium 232, 448, 460, and 960 Tape Drives	274338-B22

Step 5 - Disks — Optional

HP SCSI Ultra320 Hard Disk Drives (for use in StorageWorks MSA30 and 4300 Enclosures; ES47/80 2P System Building Block Drawer; and I/O Building Block Drawers for ES47/80 and GS1280)

See **HP SCSI Ultra320 Hard Drive Option Kits QuickSpecs** for configuration details:
http://h18000.www1.hp.com/products/quickspecs/11531_div/11531_div.HTML

300-GB Pluggable Ultra320 SCSI 10,000 rpm Hard Drive	3R-A4952-AA
146.8-GB Pluggable Ultra320 SCSI 10,000 rpm Hard Drive	3R-A3841-AA
72.8-GB Pluggable Ultra320 SCSI 10,000 rpm Hard Drive	3R-A3839-AA
300-GB Pluggable Ultra320 SCSI 15,000 rpm Hard Drive	3R-A6726-AA
146.8-GB Pluggable Ultra320 SCSI 15,000 rpm Hard Drive	3R-A4945-AA
72.8-GB Pluggable Ultra320 SCSI 15,000 rpm Hard Drive	3R-A3851-AA
36.4-GB Pluggable Ultra320 SCSI 15,000 rpm Hard Drive	3R-A3849-AA

Step 6 – Storage Systems — Optional

HP StorageWorks Modular Smart Array 1000

The HP StorageWorks Modular Smart Array 1000 is a 2-Gb Fibre Channel storage system designed for the entry-level to mid-range Storage Area Network (SAN). The MSA1000 combines the array controller shelf and the drive shelf, which holds up to 14 universal disk drives in a single 4U rackmount enclosure. More storage can be deployed with the addition of up to two drive enclosures for a maximum storage capacity of 6 TB when using the146-GB drives. Besides the single-port 2-Gb Fibre Channel I/O module that comes standard, there is an 8-port switch that mounts internally. The MSA1000 provides Ultra3 SCSI connections to the hard drives and uses HP Universal Ultra2, Ultra3, and/or Ultra320 drives.
See **HP StorageWorks Modular Smart Array 1000 Specific for Tru64 UNIX or OpenVMS Only QuickSpecs** for configuration details: http://h18000.www1.hp.com/products/quickspecs/11621_div/11621_div.HTML

Modular Smart Array 1000	MSA1000 with 256-MB cache	201723-B22

HP StorageWorks Enterprise Virtual Array

The HP Enterprise Virtual Array storage array products have been designed for high performance, high capacity, and high availability. These products are supported by a powerful and simple suite of management software. EVA storage is designed for improved storage utilization and scalability. EVA storage offers easy capacity expansion, instantaneous replication, and simplified storage administration.

See **HP StorageWorks Enterprise Virtual Array QuickSpecs** for configuration details:
http://h18000.www1.hp.com/products/quickspecs/12408_div/12408_div.HTML

ES/GS Common Options

Model	EVA4000	EVA6000	EVA8000	EVA8000 with expansion cabinet
Drive Interface	Dual ported 2 Gb/s FC-AL	Dual ported 2 Gb/s FC-AL	Dual ported 2 Gb/s FC-AL	Dual ported 2 Gb/s FC-AL
Cache per controller pair	4GB	4GB	8GB	8GB
Host ports	Four 2 Gb/s FC	Four 2 Gb/s FC	Eight 2 Gb/s FC	Eight 2 Gb/s FC
Device ports	Four 2 Gb/s FC-AL	Four 2 Gb/s FC-AL	Eight 2 Gb/s FC-AL	Eight 2 Gb/s FC-AL
Device FC-AL switches	0	2	4	4
Maximum Drives per model	56	112	168	240

HP StorageWorks Disk Array xp10000

The HP StorageWorks Disk Array xp1000 is an enterprise storage system that supports up to 240 Fibre Channel disk drives with up to 69 TB of capacity. The xp10000 supports up to 48 Fiber Channel (2-Gb or 4-Gb) interface connections.
See **HP StorageWorks Disk Array xp10000 Product Information** for configuration details:
http://h18000.www1.hp.com/products/quickspecs/12275_div/12275_div.HTML

HP StorageWorks Disk Array xp12000

The HP StorageWorks Disk Array xp12000 is an enterprise storage system that supports up to 1152 Fibre Channel disk drives with up to 332 TB of capacity. The xp12000 supports up to 128 Fiber Channel (2-Gb or 4-Gb) interface connections.
See **HP StorageWorks Disk Array xp12000 QuickSpecs** for configuration details:
http://h18006.www1.hp.com/products/quickspecs/12072_div/12072_div.html

---

Step 7 – Tape Drives — Optional

HP StorageWorks DAT Tape Drive Family

The HP StorageWorks DAT Tape Drives are an entry-level solution for small to medium server storage backup needs. The DAT Tape Drives have backwards compatibility with previous DDS technologies.
See **HP StorageWorks DAT Drives QuickSpecs** for configuration details:
http://h18000.www1.hp.com/products/quickspecs/11883_div/11883_div.HTML

DAT Hot-Plug Tape Drives (for use in StorageWorks MSA30 and 4300 Enclosures; and ES47/80 2P System Drawer)	40-GB hot-plug DAT tape drive, uses two Universal storage device slots	3R-A4745-AA or Q1546A
	72-GB hot-plug DAT tape drive, uses two Universal storage device slots	3R-A4547-AA or Q1529A
DAT Internal Tape Drives (for use in Rackmount Tape Drive Enclosures)	40-GB internal DAT tape drive, half-height device (carbon)	3R-A6831-AA or C5686C
	72-GB internal DAT tape drive, half-height device (carbon)	3R-A6663-AA or Q1522B
DAT External (tabletop)**Tape Drives**	40-GB external (tabletop) DAT tape drive	C5687D
	72-GB external (tabletop) DAT tape drive	Q1523B

ES/GS Common Options

HP StorageWorks SDLT Tape Drive Family

The HP StorageWorks SDLT Tape Drive is a high-capacity, high-performance streaming tape drive. The HP StorageWorks SDLT 320-GB Tape Drive is backward read compatible with DLT Type IV media. The SDLT 600 offers backward-read compatibility to the DLT VS 160 and to the SDLT 320 and SDLT 220.
See HP StorageWorks SDLT Tape Drive Family QuickSpecs for configuration details:
http://h18000.www1.hp.com/products/quickspecs/11840_div/11840_div.HTML

SDLT Internal Tape Drives (for use in Rackmount Tape Drive Enclosures)	320-GB internal SDLT tape drive, full-height device	257319-B21
	600-GB internal SDLT tape drive, full-height device	A7518B
SDLT External (tabletop) Tape Drives	320-GB external (tabletop) SDLT tape drive, North America (Carbon)	257319-001
	320-GB external (tabletop) SDLT tape drive, International (Carbon)	257319-B31
	320-GB external (tabletop) SDLT tape drive, Japan (Carbon)	257319-291
	600-GB external (tabletop) SDLT tape drive, North America	A7519B
	600-GB external (tabletop) SDLT tape drive, Worldwide	A7520B

HP StorageWorks DLT VS Tape Drive Family

The HP StorageWorks DLT VS80 Tape Drive is an upgrade drive for current DLT 40 customers, offering a 100% increase in capacity. Utilizing industry standard DLT Type IV Media, the DLT VS80 Tape Drive offers backward-read compatibility with media previously written in the DLT 40 format. The DLT VS80 drive is also read and write compatible with data protection solutions utilizing the HP StorageWorks DLT1 Tape Drive, such as the HP StorageWorks DLT1 1280 SuperLoader, and can be read by the HP StorageWorks SDLT 220 and 320 Tape Drives.

See HP StorageWorks DLT VS Family Tape Drive QuickSpecs for configuration details:
http://h18000.www1.hp.com/products/quickspecs/11403_div/11403_div.HTML

DLT VS Internal Tape Drives (for use in Rackmount Tape Drive Enclosures)	80-GB DLT VS internal tape drive, full-height device, (carbon), Worldwide	3R-A5071-AA 337699-B21
	160-GB DLT VS internal tape drive, full-height device, (carbon), Worldwide	A7569B
DLT VS External (tabletop) Tape Drives	80-GB DLT VS external (tabletop) tape drive, North America (carbon)	3R-A4982-AA 337699-B22
	80-GB DLT VS external (tabletop) tape drive, International (carbon)	3R-A4984-AA 337699-B31
	160-GB DLT VS external (tabletop) tape drive, North America (carbon)	A7570B
	160-GB DLT VS external (tabletop) tape drive, International (carbon)	A7571B

ES/GS Common Options

HP StorageWorks Ultrium LTO Tape Drive Family

HP StorageWorks Ultrium tape drives are based on LTO Ultrium format, an open standard with a well-defined four-generation roadmap.

See **HP StorageWorks Ultrium Full-Height Tape Drives QuickSpecs** for configuration details:
http://h18000.www1.hp.com/products/quickspecs/11739_div/11739_div.HTML
See **HP StorageWorks Ultrium Half-Height Tape Drives QuickSpecs** for configuration details:
http://h18000.www1.hp.com/products/quickspecs/12128_div/12128_div.HTML

Ultrium LTO Internal Tape Drives (for use in Rackmount Tape Drive Enclosures)	Ultrium 232, 200-GB LTO internal tape drive, half-height device	DW064A
	Ultrium 448, 400-GB LTO internal tape drive, half-height device	DW016A
	Ultrium 920, 800-GB LTO internal tape drive, half-height device	EH841A
	Ultrium 460, 400-GB LTO internal tape drive, full height device	Q1518B
	Ultrium 960, 800-GB LTO internal tape drive, full-height device	Q1538A
Ultrium LTO External (tabletop) **Tape Drives**	Ultrium 232, 200-GB LTO external (tabletop) tape drive	DW065B
	Ultrium 448, 400-GB LTO external (tabletop) tape drive	DW017B
	Ultrium 920, 800-GB LTO external tape drive, half-height device	EH842A
	Ultrium 460, 400-GB LTO external (tabletop) tape drive	Q1520B
	Ultrium 960, 800-GB LTO external (tabletop) tape drive	Q1539B

Step 8 – Tape Storage Systems — Optional

HP StorageWorks DAT Tape Autoloaders

Backup solution for small to medium companies with limited IT support or remote sites of larger companies. The autoloader includes a single tape drive inside an enclosure that holds ten data cartridges in two removable magazine. HP DDS tape drives are backward read-write compatible with the two previous DDS generations, thus this DDS-4 autoloader also reads and writes DDS-3 and DDS-2.

See **HP StorageWorks DAT 72x10 Tape Autoloader QuickSpecs** for configuration details:
http://h18000.www1.hp.com/products/quickspecs/12486_div/12486_div.HTML

DAT 72x10 Autoloader	AE313A

HP StorageWorks 1/8 Tape Autoloader Family

The HP StorageWorks 1/8 Tape Autoloader provides unattended backup in a datacenter rack or on a desk next to the office server. The 1/8 Tape Autoloader in a 2U form factor can house up to eight cartridges.

See **HP StorageWorks 1/8 Tape Autoloader Family QuickSpecs** for configuration details:
http://h18000.www1.hp.com/products/quickspecs/11841_div/11841_div.HTML

1/8 Ultrium LTO 232 Autoloader	Table Top	AA202A
1/8 Ultrium LTO 448 Autoloader	Table Top	AA203A
1/8 Ultrium LTO 960 Autoloader	Table Top	AA204A
Rack Mount Kit	Use to mount Table Top units in a 19" RETMA rack	C9268R

ES/GS Common Options

HP StorageWorks MSL2024 Tape Library

The HP StorageWorks MSL2024 Tape Library combines compressed capacity (2:1) of up to 19.2 TB and tape library features in a compact 2U form factor. The HP StorageWorks MSL2024 Tape Library offers two 12-slot removable magazines, one mail slot and a barcode reader for efficient media management.

See **HP StorageWorks MSL2024 Tape Library QuickSpecs** for configuration details:
http://h18006.www1.hp.com/products/quickspecs/12383_div/12383_div.html

Family Comparison	MSL2024 Ultrium 960 Tape Library	MSL2024 Ultrium 920 Tape Library	MSL2024 Ultrium 448 Tape Library
Drive Technology	Ultrium 960 SCSI	Ultrium 920	Ultrium 448
Number of Drives	1	1 or 2	1 or 2
Capacity (compressed 2:1)	19.2 TB	19.2 TB	9.6 TB
Maximum Data Transfer (compressed 2:1)	160 MB/s	240 MB/s (2 drives)	96 MB/s (2 drives)
Interface	4Gb Native Fibre Channel Ultra320 SCSI LVD/SE	3Gb/sec SAS Ultra320 SCSI LVD/SE	Ultra160 SCSI LVD/SE

HP StorageWorks MSL4048 Tape Libraries

The HP StorageWorks MSL4048 Tape Library provides up to 19.2 TB of storage density in a 4U form factor. Web-based management features reduce the dependencies on local IT resources, allowing multiple sites to be supported centrally. Each library includes four removable 12-slot magazines, and a user configurable 3 slot mail-slot dedicated for import/export of data cartridges. A barcode reader is part of the standard configuration for facilitating media management.

See **HP StorageWorks MSL4048 Series Tape Libraries QuickSpecs** for configuration details:
http://h18000.www1.hp.com/products/quickspecs/12422_div/12422_div.HTML

Family Comparison	MSL4048 Ultrium 960 FC	MSL4048 Ultrium 960	MSL4048 Ultrium 920	MSL4048 Ultrium 448
Number of Drives	1 or 2	1 or 2	1 to 4	1 to 4
Capacity (native)	19.2 TB	19.2 TB	19.2 TB	9.6 TB
Maximum Data Transfer (native)	288 MB/s (one drive) 576 MB/s (two drives)	288 MB/s (one drive) 576 MB/s (two drives)	216 MB/s (one drive) 864 MB/s (four drives)	86 MB/s (one drive) 346 MB/s (four drives)
Interface	4Gb Native Fibre Channel	Ultra320 SCSI LVD/SE	Ultra320 SCSI LVD/SE 3 Gb/sec SAS	Ultra160 SCSI LVD/SE

HP StorageWorks MSL6000 Tape Libraries

The MSL6000 Tape Libraries offer storage in two enclosures (5U or 10U form factor), in tabletop or rack configurations. The MSL6000 has the capability for multi-unit scalability. The Libraries support interface connections using Ultra3 LVD SCSI Interface or Fibre Channel (2 Gb).

See **HP StorageWorks MSL6000 Series Tape Libraries QuickSpecs** for configuration details:
http://h18000.www1.hp.com/products/quickspecs/11863_div/11863_div.HTML

ES/GS Common Options

	MSL6026	MSL6030	MSL6052	MSL6060
Form Factor	5U	5U	10U	10U
Tape Drives	SDLT 600	Ultrium 460 or 960	SDLT 600	Ultrium 460 or 960
Number of Drives	up to 2	up to 2	up to 4	up to 4
Media Slots	26	30	52	60
Storage per Library, TB	15.6	24	31.2	48
Libraries per rack	8	8	4	4
Storage per Rack, TB	124.8	192.0	124.8	192.0
Interface Connection	Ultra3 LVD SCSI Interface or Embedded Fibre (2 Gb)	Ultra3 LVD SCSI Interface or Embedded Fibre (2 Gb)	Ultra3 LVD SCSI Interface or Embedded Fibre (2 Gb)	Ultra3 LVD SCSI Interface or Embedded Fibre (2 Gb)

HP StorageWorks EML E-Series Tape Libraries

With up to 16 HP Ultrium tape drives, the EML E-Series offers native throughput of over 4.6 TB/hr. Through the addition of expansion modules, the EML E-Series library scales to 16 drives and 442 slots for maximum performance or 8 drives and 505 slots for maximum capacity.

See HP StorageWorks EML E-Series Series Tape Libraries QuickSpecs for configuration details:
http://h18000.www1.hp.com/products/quickspecs/12238_div/12238_div.HTML

Configuration	EML 103e	EML 245e	EML 442e Maximum Performance	EML 505e Maximum Capacity
# of drives possible	1-4	1-8	1-16	1-8
# of slots	103 5 in configurable load port	245 15 in configurable load port	442 35 in configurable load port	505 35 in configurable load port
Product height within rack	12U	24U	40U	40U
Maximum Capacity (native)	41.2	98.0 TB	176.8 TB	202 TB
Maximum throughput (native)	1.1 TB/hr	2.3 TB/hr	4.6 TB/hr	2.3 TB/hr

HP StorageWorks ESL E-Series Tape Libraries

The HP StorageWorks Enterprise Storage Libraries (ESL) E-Series enterprise tape libraries offer drive and cartridge density and are available in a variety of configurations, with up to 28.4 TB of native Ultrium 960 storage capacity per square foot. Fully integrated into HP StorageWorks Extended Tape Library Architecture (ETLA), HP provides self-aware tape storage designed specifically for the SAN. ETLA also offers remote management of the entire library system including robotics, drives, Interface Controllers, and the Interface Manager management card.

See HP StorageWorks ESL E-Series Tape Libraries QuickSpecs for configuration details:
http://h18006.www1.hp.com/products/quickspecs/11877_div/11877_div.html

ES/GS Common Options

	ESL 712e	ESL 322e	ESL 630e	ESL286e
Drive Technology	Ultrium 960 FC Ultrium 460 SCSI Ultrium 460 FC	Ultrium 960 FC Ultrium 460 SCSI Ultrium 460 FC	SDLT 320 SDLT 600	SDLT 320 SDLT 600
Maximum Cartridge Count	712	322	630	286
Maximum Drive Count	24	24	24	24
Maximum Capacity (native)	284.8 TB	128.8 TB	189 TB	85.8 TB

HP StorageWorks 6000 Virtual Library System

The HP StorageWorks 6000 Virtual Library System (VLS 6000) emulates popular tape libraries and tape drives. By emulating multiple tape drives simultaneously, more backup jobs can be done in parallel resulting in reduced backup times. Additionally, because the data resides on disk, single file restores are exceptionally fast.

See HP StorageWorks 6000 Virtual Library System QuickSpecs for configuration details:
http://h18006.www1.hp.com/products/quickspecs/12233_div/12233_div.html

	VLS 6105	VLS 6109	VLS 6510	VLS 6518	VLS 6840	VLS 6870
Raw Capacity	3TB	6TB	6TB	12TB	12TB	24TB
Maximum Raw Capacity	6TB	12TB	12TB	24TB	48TB	96TB
Usable Capacity	2.5TB	4.4TB	5TB	8.8TB	10TB	17.6TB
Maximum Usable Capacity	5TB	8.8TB	10TB	17.6TB	40TB	70.4TB
Interface – 2Gb Fibre Channel Ports (LC connectors, auto-negotiating)	Two	Two	Four	Four	Four	Four

Step 9 – Storage Network Switches, Hubs, and Interconnects — Optional

Network Storage Routers

Network Storage Routers enable multiple host servers to communicate with a SCSI tape device over a Fibre Channel link.
For configuration details, see the Switches, Hubs, and Interconnects QuickSpecs at:
http://www.compaq.com/products/quickspecs/North_America/10490.html

ES/GS Common Options

Fibre Channel Switches

HP supports three product lines of Fibre Channel switch products that may be used to build SAN fabrics. Each product line provides certain advantages that apply to specific applications. For more information on specific switch models and selection, please refer to Part II in the **SAN Design Guidelines** referenced on the SAN Infrastructure page:
http://h18006.www1.hp.com/storage/saninfrastructure/index.html

The B-Series product line includes a wide range of Fibre Channel switches, described as "SAN switches" and "Core switches." Products in this family include switches from the HP StorageWorks SAN Switch 2/16 to the HP StorageWorks Core Switch 2/64. This product line includes switches with 8, 16, 32, and 64 ports, including both full-function and entry-level models. The HP StorageWorks Core Switch 2/64 includes a pair of independent 64-port switches in a single chassis with a high level internal redundancy.

The C-Series product line includes the Cisco MDS 9506 and 9509 Multilayer Directors and the Cisco MDS 9216, 9120, and 9140 Multilayer Fabric Switches. The MDS 9506 is supported with 224 ports, over seven modular chassis consisting of both 16-port and 32-port modules. The MDS 9506 is supported with 128 ports, over four modular chassis consisting of both 16-port and 32-port modules. The MDS 9216 has a basic configuration with 16 ports. It has an expansion slot that supports either a 16- or a 32-port card, for 32 or 48 ports in total.

The M-Series Fabric product line includes a wide range of Fibre Channel switches described as "Directors" and "Edge switches." A partial list of products in this family includes the HP StorageWorks Director 2/140 and the HP StorageWorks Edge Switch 2/32. This product line includes switches with 16, 24, 32, 64, and 140 ports internal microcode. The HP StorageWorks Director 2/64 and 2/140 switches have a high level of internal redundancy.

Step 10 – Keyboards, Mouse, Monitors, Power Cords – Optional

Keyboards - USB Keyboard/Language	Tru64 UNIX	OpenVMS (Note 1)
N.A./International keyboard	3R-A6554-AA	3X-LK464-A2
Arabic keyboard	3R-A6540-AA	-
Belgian keyboard	3R-A6541-AA	3X-LK464-AB
BHCSY keyboard	3R-A6542-AA	-
Canadian/English keyboard	-	3X-LK464-AQ
Canadian/French keyboard	3R-A6543-AA	3X-LK464-AC
Cyrillic keyboard (Russian)	3R-A6544-AA	3X-LK464-BT
Czech keyboard	3R-A6545-AA	3X-LK464-BV
Danish keyboard	3R-A6546-AA	3X-LK464-AD
Dutch keyboard	3R-A6547-AA	3X-LK464-AH
Finnish keyboard	3R-A6548-AA	3X-LK464-AF
French keyboard	3R-A6549-AA	3X-LK464-AP
German keyboard	3R-A6550-AA	3X-LK464-AG
Greek keyboard	3R-A6551-AA	3X-LK464-BH
Hebrew keyboard	3R-A6552-AA	3X-LK464-AT
Hungarian keyboard	3R-A6553-AA	3X-LK464-BQ
International keyboard	3R-A6554-AA	-
Italian keyboard	3R-A6555-AA	3X-LK464-AI

ES/GS Common Options

Japanese keyboard	3R-A6556-AA	-
Korean keyboard	3R-A6557-AA	-
Latin-American keyboard	3R-A6558-AA	-
Norwegian keyboard	3R-A6559-AA	3X-LK464-AN
Polish keyboard	3R-A6560-AA	3X-LK464-BP
Portuguese keyboard	3R-A6561-AA	3X-LK464-AV
Romanian keyboard	-	3X-LK464-BL
Simplified Chinese keyboard	3R-A6562-AA	-
Slovak keyboard	3R-A6563-AA	3X-LK464-CZ
Spanish keyboard	3R-A6564-AA	3X-LK464-AS
Swedish keyboard	3R-A6565-AA	3X-LK464-AM
Swiss/French keyboard	3R-A6566-AA	3X-LK464-AK
Swiss/German keyboard	-	3X-LK464-AL
Traditional Chinese keyboard	3R-A6567-AA	-
Thai keyboard	3R-A6568-AA	-
Turkish Q keyboard	3R-A6569-AA	3X-LK464-BU
Turkish/F keyboard	-	3X-LK464-BW
UK keyboard	3R-A6570-AA	3X-LK464-A2
Yugoslavian keyboard	-	3X-LK464-BY

NOTE 1: OpenVMS keyboard (3X-LK464-xx) comes with PS/2 and USB connectors

---

Rackmount Keyboard/Drawer and Keyboard/Monitor Options	PS2 to USB Converter – allows for connection of a PS2 keyboard and/or mouse to an AlphaServer ES47 System	3R-A4495-AA
	HP Rackmount Flat Panel Monitor – TF T721OR 17-inch (17-inch viewable image area) 1U rackmount flat panel display. 0.264mm pixel pitch, 1280 x1024 @60/75 Hz high and low voltage power cords, Worldwide	3R-A5187-AA
	Keyboard, Video, Mouse (KVM) Switches	
	HP Server 1 x 8-Port KVM Switch (Tru64 UNIX and OpenVMS)	336044-B21
	USB Interface Adapter – 1 pack (Mandatory option with 336044-B21)	336047-B21
	For more information, refer to the Release Notes at: http://h18002.www1.hp.com/alphaserver/download/es47_es80_gs1280_Console_Switch_Release_Notes.pdf http://h18002.www1.hp.com/alphaserver/download/es47_es80_gs1280_Console_Switch_Release_Notes.html	

	CAT5e Cables	
	3 foot (1m) – 4 pack	263474-B21
	6 foot (2m) – 8 pack	263474-B22
	12 foot (4m) – 8 pack	263474-B23
	20 foot (6m) – 4 pack	263474-B24
	40 foot (12m) – 1 pack	263474-B25
	Integrated Keyboard and Drawer	
	Integrated Keyboard and Drawer (1U), North America	3R-A4404-AA
	Integrated Keyboard and Drawer (1U), International	3R-A4405-AA
	Integrated Keyboard and 17" Monitor (TFT7600RKM)	
	Integrated Keyboard and Monitor, North America	AG052A
	Integrated Keyboard and Monitor, United Kingdom	AG053A
	Integrated Keyboard and Monitor, Germany	AG054A
	Integrated Keyboard and Monitor, France	AG055A
	Integrated Keyboard and Monitor, Italy	AG056A
	Integrated Keyboard and Monitor, Spain	AG057A
	Integrated Keyboard and Monitor, International	AG066A
Mouse	3-button mouse – USB	3R-A6641-AA

Monitors

Configuration Guidelines

1. Graphics monitors other than those listed can be used if compatible with SVGA graphics ordered with system.
2. A video cable, 6-foot/1.8-meter length, is included with all variants of monitors.
3. Video extension cable required if monitor is located more than 1-meter from server.
4. Monitors will ship with, but not be integrated with systems. – NOTE: Taiwan and Australia/New Zealand models ship separately.

Carbon/Silver Monitors	V7650 17-inch (16-inch viewable image size) 0.24mm FST multi-frequency color monitor, 2-tone (carbon/silver), VGA to 1024 x 768 @85 Hz, MPRII/TCO 03/Energy Star Compliant, Northern Hemisphere with NA power cord, VGA cable	3R-A5853-AA
	Same as above, with Euro power cord	3R-A5854-AA
	Same as above, Taiwan, NA power cord	3R-A5855-AA
	Same as above, PRC power cord, CCIB	PF996AA#AB2
	Same as above, Southern Hemisphere with Australia/New Zealand power cord	PF996AA#ABG

ES/GS Common Options

Carbon/Silver Flat Panel Monitors	L2065, 20-inch (20.1-inch viewable image area) flat panel monitor 0.255mm pixel pitch, 1600 x 1200 @60 Hz, A + D, TCO 03, Energy Star compliant, four video input connectors, (VGA, DVI-I, composite video and s-video), North America power cord, VGA and DVI-I cables	3R-A6701-AA
	L2065, 20-inch (20.1-inch viewable image area) flat panel monitor 0.255mm pixel pitch, 1600 x 1200 @60 Hz, A + D, TCO 03, Energy Star compliant, four video input connectors, (VGA, DVI-I, composite video and s-video), Euro power cord, VGA and DVI-I cables	3R-A6702-AA
	L1506, 15" (15" viewable image size) TFT flat panel monitor, 0.297 mm pixel pitch, 1024 x 768 @60 Hz, multi-mode support, MPR-II/TCO 03/Energy Star compliant, NA power cord, VGA cable	3R-A6515-AA
	Same as above, Euro power cord	3R-A6516-AA
Monitor Power Cords	North America, 120V, 75-inch	BN26J-1K
	Australia, New Zealand, 2.5-meter	3R-A6023-AA
	Central Europe, 2.5-meter	BN19C-2E
	Denmark, 2.5-meter	BN19K-2E
	Egypt, India, South Africa, 2.5-meter	BN19S-2E
	Italy, 2.5-meter	BN19M-2E
	Israel, 1.9-meter	3R-A6883-AA
	Japan, 2.5-meter, Dentori approved	3X-BN46F-02
	Republic of China (103541-001)	BN19H-2E
	Switzerland, 2.5-meter	BN19E-2E
	UK, Ireland, 2.5-meter	BN19A-2E
Keyboard or Mouse Extension Cable	6-foot/1.8-meter keyboard or mouse extension cable; to extend both keyboard and mouse order two cables	3X-BC34A-06
Video Extension Cable	6-foot/1.8-meter video extension cable	BN39C-02

Step 11 - Graphics Support — Optional

ES/GS Common Options

Description	Device Type	Part Number	Maximum Quantity Tested & Supported			
			U=Tru64 UNIX O=OpenVMS L=Redhat V7.2 Linux			
			per system	per hard partition: per system		
			ES47 Tower Workstation	ES47	ES80	GS1280
Graphics Adapters						
ATI RADEON 7500 2D/3D AGP graphics accelerator	AGP 4X	3X-PBXGG-AB	1/U 1/O	4:4/U 4:4/O	4:8/U 4:8/O	4:64/U 4:64/O
ATI RADEON 7500 2D/3D PCI graphics accelerator	PCI 3.3V, 66MHz	3X-PBXGG-AA	4/U 4/O	4:4/U 4:4/O	4:8/U 4:8/O	4:64/U 4:64/O

For RADEON 7500 option information see:
PCI: http://h18002.www1.hp.com/alphaserver/options/ases47/ases47_3x-pbxgg-aa.html
AGP: http://h18002.www1.hp.com/alphaserver/options/ases47/ases47_3x-pbxgg-ab.html
Performance NOTE: The AGP version of the Radeon graphics accelerator will deliver significantly better performance for EV7 systems because the AGP bus is faster than the PCI bus; plus the AGP accelerator does not contend with other adapters on the AGP bus (each AGP bus has only one adapter slot). The Radeon AGP graphics accelerator delivers about the same performance on EV7 and EV68 systems. However, the Radeon PCI graphics accelerator delivers noticeably better performance on EV68 systems compared to EV7 systems because the EV7 systems' hardware implementation of "Programmable I/O" is not as fast as the EV68 implementation.

Graphics Software	Tru64 UNIX Open3D license for RADEON 7500 (required for 3D functionality)	QL-6ZRA9-AA
	OpenVMS Open3D license for RADEON 7500 (required for 3D functionality for OpenVMS 7.3.x and earlier versions. Later versions of OpenVMS include the license for 3D functionality)	QL-0ADA9-AA
	Additional Tru64 UNIX media kit for RADEON 7500 (initial kit ships with RADEON card)	QA-6ZRAA-H8

Step 12 - System Software — Optional

Licensing Policy for HP Add-on Software on Systems with Partitions

The license for an hp software product, the license(s) and license key(s) that represent those licenses, may be applied to any partition (OpenVMS Galaxy instance or hardware partition) within that system. Different versions of the operating system or layered products may be used on different partitions. In this case, the customer must be licensed for the latest version in use. Software products from other suppliers may have different licensing requirements for partitions.

Tru64 UNIX

1. Tru64 UNIX base systems include pre-installed software, Base license, Unlimited User license, Server Extension license, Internet Express, and Secure Web Server
2. Media and documentation required for first system on site

Software Processor Codes in part numbers

ES/GS Common Options

	Layered Software Tier	Part Number Code for 8th character
ES47 Tower and ES47	Workgroup	x = E
ES80	Departmental	x = G
GS1280	Enterprise	x = Q

Tru64 UNIX media and online documentation on CD-ROM	QA-6ADAA-H8
Tru64 UNIX full hard copy documentation	QA-6ADAA-GZ
TruCluster Plus Software Package with licenses for TruCluster Server, Logical Storage Manager and AdvFS Utilities	QP-6R9Ax-AA
TruCluster Server license	QL-6BRAx-AA
Logical Storage Manager license	QL-2GVAx-AA
AdvFS Utilities license	QL-0EGAx-AA
Advanced Server for Tru64 UNIX, 25 client concurrent use license	QL-5U29M-3D
Advanced Server for Tru64 UNIX, 50 client concurrent use license	QL-5U29M-3E
Advanced Server for Tru64 UNIX, 100 client concurrent use license	QL-5U29M-3F
Advanced Server for Tru64 UNIX, 250 client concurrent use license	QL-5U29M-3G
Advanced Server for Tru64 UNIX, 500 client concurrent use license	QL-5U29M-3H
Layered products media and documentation for Tru64 UNIX on CD-ROM	QA-054AA-H8
DECnet/OSI end-system function license for Tru64 UNIX	QL-MTJAx-AA
DECnet/OSI extended license for Tru64 UNIX	QL-MTKAx-AA

OpenVMS

- OpenVMS system base packages include Base license, Enterprise Integration Server for OpenVMS License Package.
- Media and documentation required for first system on site
- Enterprise Integration Package includes licenses for TCP/IP Services for OpenVMS, DECwindows Motif for OpenVMS Alpha, DECnet-Plus for OpenVMS Alpha End System, Archive/Backup System for OpenVMS Management Tools, Archive/Backup Agent for Windows NT, Office Server for OpenVMS, Office Server Client Access, PATHWORKS 32, Advanced Server/PATHWORKS for OpenVMS.
- OpenVMS Concurrent Use licenses provide the right to interactively use the operating system by the specified number of concurrent users on a designated OpenVMS system. OpenVMS Concurrent Use licenses can be moved from one system to another at user discretion and can be shared in a mixed OpenVMS VAX and OpenVMS Alpha cluster.
- OpenVMS Traditional Unlimited Use license is system specific and can only be used on one single system at a time. It cannot be shared between systems or in an OpenVMS VAX or OpenVMS Alpha Cluster.

Software Processor Codes in part numbers

	Layered Software Tier	Part Number Code for 8th character
ES47 Tower and ES47	Workgroup	x = E
ES80	Departmental	x = G
GS1280	Enterprise	x = Q

ES/GS Common Options

Concurrent Use 1-user license	QL-MT3AA-3B
Concurrent Use 2-user license	QL-MT3AA-3C
Concurrent Use 4-user license	QL-MT3AA-3D
Concurrent Use 8-user license	QL-MT3AA-3E
Concurrent Use 16-user license	QL-MT3AA-3F
Concurrent Use 32-user license	QL-MT3AA-3G
Concurrent Use 64-user license	QL-MT3AA-3H
Concurrent Use 128-user license	QL-MT3AA-3J
Concurrent Use 256-user license	QL-MT3AA-3K
Traditional unlimited-user license	QL-MT2Ax-AA
OpenVMS media and online documentation on CD-ROM	QA-MT1AA-H8
OpenVMS hard copy documentation	QA-001AA-GZ
OpenVMS base hard copy documentation	QA-09SAA-GZ
OpenVMS Alpha Software Products Library Package: Layered products media and documentation for OpenVMS on CD-ROM, includes media and documentation for all products licensed in the Enterprise Integration Package.	QA-03XAA-H8
DECnet-Plus/DECnet end-system license	QL-MTFAx-AA
DECnet-Plus/DECnet extended-function license	QL-MTHAx-AA
Cluster License for OpenVMS Alpha	QL-MUZAx-AA
OpenVMS Volume shadowing license	QL-2A1Ax-AA

OpenVMS Galaxy

Galaxy Soft Partition Rules

- OpenVMS Galaxy hardware requirements:
  - One or more CPUs per instance.
  - One or more I/O modules per instance.
  - Console port or network access per instance.
  - Memory:
    - Enough private memory for OpenVMS and applications
    - Enough shared memory for the shared memory cluster interconnect, global sections, and so on
- Maximum of eight Galaxy instances per system or hard partition.
- Display for configuration management with either an Alpha or VAX workstation running DECwindows or a Windows NT workstation with an X terminal emulator.
- For each CPU in an OpenVMS Galaxy, one OpenVMS Galaxy License if mandatory.

For more information about OpenVMS Galaxy requirements, configurations, and procedures, refer to the **OpenVMS Alpha Galaxy Guide**. The latest version is always available at http://h71000.www7.hp.com/availability/galaxy.html

Galaxy 1-CPU License	QL-66XAA-3B
Galaxy 2-CPU License	QL-66XAA-3C
Galaxy 4-CPU License	QL-66XAA-3D
Galaxy 8-CPU License	QL-66XAA-3E
Galaxy 16-CPU License	QL-66XAA-3F

Step 13 - Hardware and Software Support Services — Optional

HP Care Pack Services

HP Care Pack Services are available for AlphaServer systems running Tru64 UNIX or OpenVMS operating systems. HP Care Pack Services are designed for customers who need support beyond that provided by the hardware product warranty with coverage for both Principal Server systems and SSPs (Subsequent System Packages) - that meet a full range of customer support requirements.

System Codes for Service Part Numbers

ES47 Tower and Workstation	x = F, yy = GA, aaa = 6JM, bbb = 5LA
ES47 Model 2 and Model 4	x = F, yy = GB, aaa = 6JN, bbb = 5LB
ES80 Model 2 and Model 4	x = F, yy = HA, aaa = 6JP, bbb = 5LB
ES80 Model 6 and Model 8	x = F, yy = HB, aaa = 6JQ, bbb = 5LC
GS1280 Model 8	x = W, yy = BA, aaa = 6JR, bbb = 5LG
GS1280 Model 16	x = W, yy = BB, aaa = 6JS, bbb = 5LG
GS1280 Model 32	x = W, yy = BD, aaa = 6JT, bbb = 5LH
GS1280 Model 64	x = W, yy = BE, aaa = 6JU, bbb = 5LH

Program Features - Principal Server

HP Support Plus

- 13x5 HW/SW support
- 4-hour response on-site hardware support
- 2-hour response for software support
- License Subscription for HP O/S software and embedded L/P (i.e., EIS for OpenVMS, unlimited users, and server extensions for Tru64 UNIX)
- Consolidated Software Media Update Distribution for OpenVMS or Tru64 UNIX and their layered products. (Some layered products are not on the Consolidated Media Update Distribution, but can be ordered separately.)

HP Support Plus, Principal Server, 12 months	HA109A1-aaa	FP-x01yy-12
HP Support Plus, Principal Server, 36 months	HA109A3-aaa	FP-x01yy-36

HP Support Plus 24

- 24x7 HW/SW support
- Named HW engineer
- 4-hour response on-site hardware support
- 2-hour response for software support
- License Subscription for HP O/S software and embedded L/P (i.e., EIS for OpenVMS, unlimited users, and server extensions for Tru64 UNIX)
- Consolidated Software Media Update Distribution for OpenVMS or Tru64 UNIX and their layered products. (Some layered products are not on the Consolidated Media Update Distribution, but can be ordered separately.)

HP Support Plus 24, Principal Server, 12 months	HA110A1-aaa	FP-x02yy-12
HP Support Plus 24, Principal Server, 36 months	HA110A3-aaa	FP-x02yy-36

ES/GS Common Options

HP Proactive 24

- Service-level management
  - Assigned account manager
  - Account support plan
  - Onsite support planning meetings
  - Quarterly activity reviews
  - One HP technical service engagement for selected hardware environments
- Availability management
  - Site environmental survey
  - System healthcheck assessment for central server
- Configuration, change, and release management
  - Semi-annual operating systems patch analysis and management
  - Semi-annual firmware updates and micro-code recommendations
  - Remote monitoring for event notification
- Incident and problem management
  - 24x7 HW/SW support
  - 4-hour response on-site hardware support
  - 2-hour response for software support
  - Phone number for problem resolution

HP Proactive 24, 12 months	HA111A1-aaa
HP Proactive 24, 36 months	HA111A3-aaa

Critical Services

- Service-level management
  - Assigned HP-certified customer support team
  - Remote monitoring of IT environment's stability
  - Quarterly onsite support planning and activity report meetings
  - Two HP technical service engagement for selected hardware environments
- Availability management
  - Site environmental survey
  - Availability checkup to assess state of IT environment against availability objectives
- Configuration, change, and release management
  - Quarterly operating systems patch analysis and management
  - Quarterly firmware updates and micro-code recommendations
  - Remote monitoring for event notification
- Incident and problem management
  - 24x7 HW/SW support
  - Dedicated, mission critical phone number for problem resolution
  - Immediate connection to experts and intervention for critical hardware and software problems
  - Immediate dispatch of an engineer for critical hardware problems
  - Accelerated escalation management

Critical Services, 12 months	HA112A1-aaa
Critical Services, 36 months	HA112A3-aaa

ES/GS Common Options

Program Features - Additional Services

SSPs (Subsequent System Packages)

- For HP Care Pack Support Plus and Support Plus 24
- HW Support at same level as corresponding package for Principal server
- License Subscription: HP O/S (where applicable)
- Telephone support through Principal server covered by full support package

HP Support Plus, Subsequent System, 12 months	FP-x21yy-12
HP Support Plus, Subsequent System, 36 months	FP-x21yy-36
HP Support Plus 24, Subsequent System, 12 months	FP-x22yy-12
HP Support Plus 24, Subsequent System, 36 months	FP-x22yy-36

Installation

- Pre-installation review
- Unpacking of equipment
- Assemble and test
- Basic product usage info
- No software installation added

Installation	HA113A1-bbb	FP-xINST-yy

Installation and Startup HP O/S

- Pre-installation review
- Unpacking of equipment
- Assemble and test
- Basic product usage info
- Install operating systems
- Product configuration
- Print and network access
- Orientation

Installation and Startup	HA114A1-bbb	FP-xSTAR-yy

NOTES:

- AlphaServer ES47/ES80 and GS1280 systems include one-year parts and labor warranty with 5x9, on-site Next Business Day response.
- HP Care Pack Services include support for new HP branded hardware options internal to the AlphaServer enclosure plus a monitor (17-inch or less excluding flat panel models).
- External storage devices/racks carry their own level of warranty and should be quoted separately for uplifted warranty services.
- In addition to the HP Care Pack Services shown above, other service packages are available for separate hardware and support. For more information on Hardware and Software Upfront Services and other HP service options available for AlphaServers, consult your Sales Account Manager, HP Services Principal, or visit: http://www.hp.com/hps/

ES/GS Common Options

Recommended Factory Integration Services

Value-added Implementation Services (VIS) provides systems integration and delivery services. VIS services, including system integration, extended burn-in, custom documentation, and on-site services can be custom-quoted for the full range of AlphaServer configurations. These pre-packaged services are offered for systems shipped to North America and Japan. For similar services in Europe, e-mail specific requirements to: customsystems.europe@hp.com For similar services in Asia/Pacific, e-mail specific requirements to: customsystems.asiapacific@hp.com

Pre-packaged VIS services are recommended for system configurations that include up to one storage array:

- Basic Integration Service (YT-VISIT-B1) System integration, testing, extended burn-in, custom documentation, and installation of a single operating system instance
- Extra RAID pair service (YT-VISIT-R1)
- Clustering Service (YT-VISIT-C1)
- Partitioning Service (YT-VISIT-P1)

Basic Integration Service — YT-VISIT-B1

Systems integration and delivery services related to the configuration of the first and/or only instance of an operating system on a single AlphaServer. Includes the following:

- Staging and Integration of the AlphaServer
- Software load of a single instance of an operating system and current revisions of firmware
- Hardware configuration, custom placement, and integration of internal options of the server per customer specifications
- Installation of a single instance of either Tru64 UNIX or OpenVMS Operating System
- Configuration, exercise, and test of up to one intelligent RAID array controller and associated disks per customer requirements
- Testing of the system and its components for a full 100-hour burn-in
- Mini-CCD (Custom Configuration Documentation) containing equipment listing, system environmental information, and software version levels

---

Extra RAID Pair Service — YT-VISIT-R1

Configuration of additional Intelligent RAID controller pairs beyond the internal and external RAID controller pairs included within the scope of the prerequisite YT-VISIT-B1 on the same single AlphaServer platform. The following services are included in the optional YT-VISIT-R1 Extra RAID Pair Service per each additional pair of Intelligent RAID controllers configured:

- Technical edit of order to guide component selection and option placement
- Configuration of the disks of the additional controller pair per customer specifications
- Hardware configuration verification
- Custom disk placement and verification
- Installation of current revisions of firmware
- Configuration, exercise and testing of up to one pair of additional intelligent array controller pair and associated disk drives for each YT-VISIT-R1
- Controller and disk testing with the system and its components during the 100-hour burn-in

---

ES/GS Common Options

Clustering Service	Configuration of a single cluster instance for AlphaServer platforms. This is a per-cluster service and is ordered along with the prerequisite YT-VISIT-B1 services. • Technical edit of order to guide component selection and option placement • Configuration of a cluster per specifications • Hardware and software configuration verification • Installation of either Tru64 UNIX TruCluster software or OpenVMS cluster software and configuration of node functions • Installation of current revisions of firmware • Cluster failover testing with the system and its components during the full 100-hour burn-in	YT-VISIT-C1
Partitioning Service	Configuration of multiple, non-clustered instances of a second or subsequent operating system on a single AlphaServer platform. This is a per-partition service and is ordered along with the prerequisite YT-VISIT-B1 services. The first instance of an operating system is included in the YT-VISIT-B1 service, subsequent partitions require the YT-VISIT-P1 partitioning service. • Technical edit of order to guide component selection and option placement • Configuration and hardware integration of the server partition per specifications • Software load of either Tru64 UNIX operating system or OpenVMS operating system on a hardware/software partition. • Partition testing with the system and its components during the full 100-hour burn-in	YT-VISIT-P1
Full Custom Configurations	The Integration Service Packages address the most-common customer requirements. For a wider range of configurations, customers can also choose additional customized services based upon a Statement of Work agreement. This includes: cluster add-on nodes, larger storage configurations, custom option support, custom system packaging, mixed operating system partitions, and configured multi-system clusters. Contact your local sales representative for these services.	

Upgrades

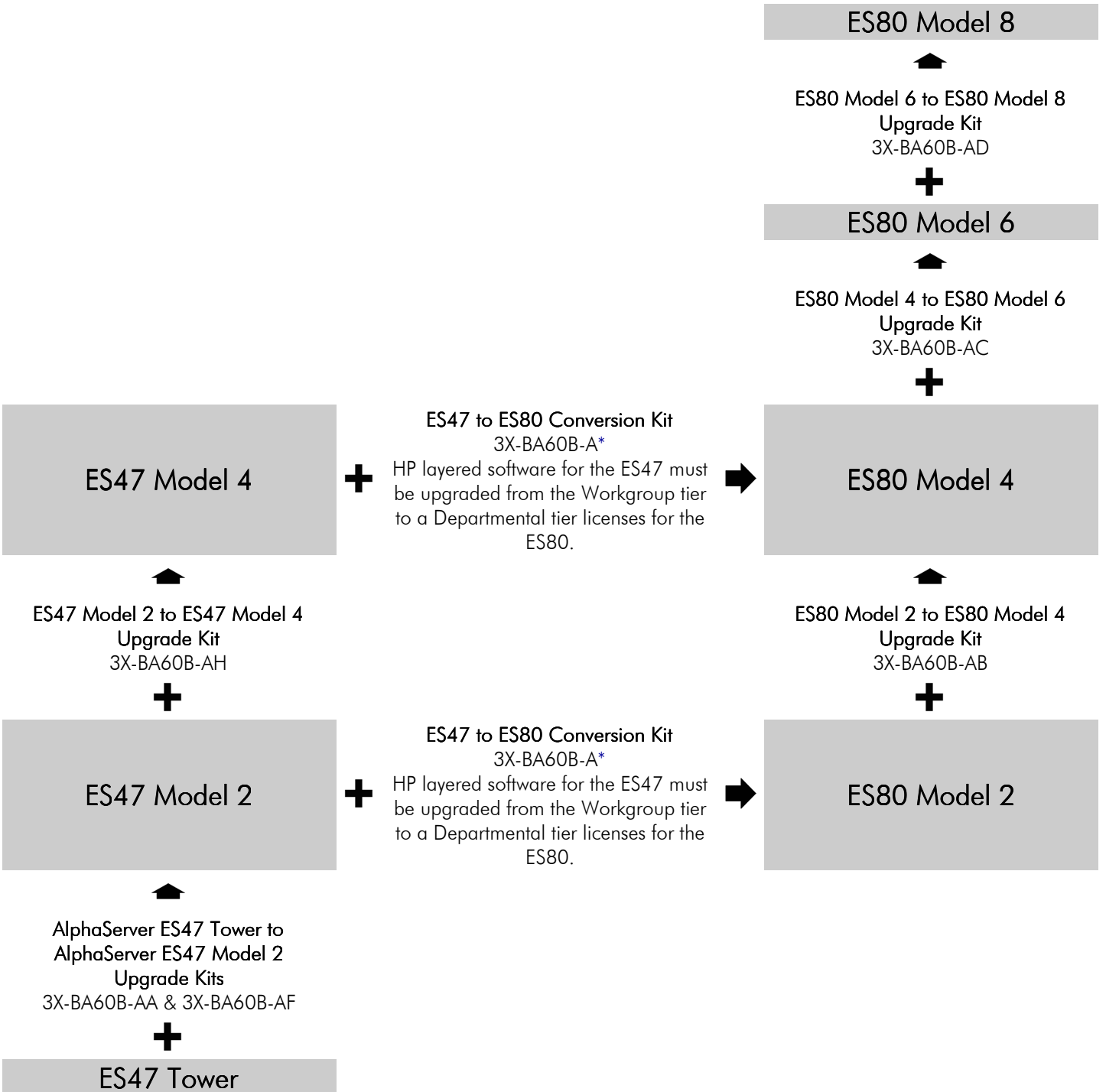
ES80 Model 8
ES80 Model 6 to ES80 Model 8 Upgrade Kit
3X-BA60B-AD
ES80 Model 6
ES80 Model 4 to ES80 Model 6 Upgrade Kit
3X-BA60B-AC
ES47 Model 4
ES47 to ES80 Conversion Kit
3X-BA60B-A*
HP layered software for the ES47 must be upgraded from the Workgroup tier to a Departmental tier licenses for the ES80.
ES80 Model 4
ES47 Model 2 to ES47 Model 4 Upgrade Kit
3X-BA60B-AH
ES80 Model 2 to ES80 Model 4 Upgrade Kit
3X-BA60B-AB
ES47 Model 2
ES47 to ES80 Conversion Kit
3X-BA60B-A*
HP layered software for the ES47 must be upgraded from the Workgroup tier to a Departmental tier licenses for the ES80.
ES80 Model 2
AlphaServer ES47 Tower to AlphaServer ES47 Model 2 Upgrade Kits
3X-BA60B-AA & 3X-BA60B-AF
ES47 Tower

AlphaServer ES47/ES80 System Hardware Upgrades

NOTE: All Upgrade Kits for ES47/80 include slide kits for mounting the H9A40/H9A45 racks. To mount the Upgrade kits in the 10000 Series Racks, order (in addition to the Upgrade Kit): ES47/ES80 Slide Kit for mounting in 10000 Series Racks.		CK-BA60B-AA
AlphaServer ES47 Tower to AlphaServer ES47 Model 2 Upgrade Kits	System expansion hardware and software to upgrade a Tru64 UNIX AlphaServer ES47 Tower to an AlphaServer ES47 Model 2. Includes one rackmount slide kit and one Tru64 UNIX SMP License.	3X-BA60B-AA
	System expansion hardware and software to upgrade an OpenVMS AlphaServer ES47 Tower to an AlphaServer ES47 Model 2. Includes one rackmount slide kit and one OpenVMS SMP License.	3X-BA60B-AF
ES47 Model 2 to Model 4 Upgrade Kit	System expansion hardware to upgrade an AlphaServer ES47 Model 2 to an AlphaServer ES47 Model 4. Includes one System Building Block Drawer with two power supplies; one rackmount slide kit; associated inter-processor cabling. (CPU Building Block Module and memory options are required. See Steps 3 and 4.)	3X-BA60B-AH
ES47 to ES80 Trade Up Kits	ES80 Base Operating System license for Tru64 UNIX to convert an AlphaServer ES47 to an AlphaServer ES80; hardware jumpers to identify system as an ES80; and ES80 identifying bezel	3X-BA60B-AU
	ES80 Base Operating System license for OpenVMS to convert an AlphaServer ES47 to an AlphaServer ES80; hardware jumpers to identify system as an ES80; and ES80 identifying bezel	3X-BA60B-AV
	NOTES: 1. The ES47 Base Operating System licenses for Tru64 UNIX and OpenVMS are no longer valid after the conversion and cannot be reused or transferred. 2. HP layered software for the ES47 must be upgraded from the Workgroup tier to a Departmental tier licenses for the ES80. Purchase a software trade-in license QL-***AG-ZB to move up from Alpha Workgroup to Alpha Departmental for each layered product Replace the "***" with the Unique Product Identifier (UPI) of the layered product. For example, to upgrade OpenVMS Volume Shadowing (UPI 2A1), purchase QL-2A1AG-ZB.	
ES80 Model 2 to Model 4 Upgrade Kit	System expansion hardware to upgrade an AlphaServer ES80 Model 2 to an AlphaServer ES80 Model 4. Includes one System Building Block Drawer with two power supplies; one rackmount slide kit; associated inter-processor cabling. (CPU Building Block Module and memory options are required. See Steps 3 and 4.)	3X-BA60B-AB
ES80 Model 4 to Model 6 Upgrade Kit	System expansion hardware to upgrade an AlphaServer ES80 Model 4 to an AlphaServer ES80 Model 6. Includes one System Building Block Drawer with two power supplies; one rackmount slide kit; associated inter-processor cabling. (CPU Building Block Module and memory options are required. See Steps 3 and 4.)	3X-BA60B-AC

Upgrades

ES80 Model 6 to Model 8 Upgrade Kit	System expansion hardware to upgrade an AlphaServer ES80 Model 6 to an AlphaServer ES80 Model 8. Includes one System Building Block Drawer with two power supplies; one rackmount slide kit; associated inter-processor cabling. (CPU Building Block Module and memory options are required. See Steps 3 and 4.)	3X-BA60B-AD

Technical Specifications

AlphaServer ES47 Tower System

Power Requirements	US/Canada	Japan	International
Nominal voltage(s)	100-120/200-240V *	100-120/200-240V	100-120/200-240V
Phase/Frequency	Single Phase/50-60 Hz	Single Phase/50-60 Hz	Single Phase/50-60 Hz
Rating	10/7A per cord	10/7A per cord	10/7A per cord
Power Plug	IEC 320 C13 to Country Specific	IEC 320 C13 to Country Specific	IEC 320 C13 to Country Specific

* NOTE: 100-120V operation requires that two power supplies be present; power supply redundancy is not provided during 100-120V operation

Physical Characteristics		
Dimensions (H x W x D)	20.1 x 8.6 x 35 in (51 x 22 x 90 cm)	
Shipping dimensions	48 x 30 x 18.5 in (122 x 76 x 47 cm)	
Weight Maximum Configuration	132 lb (59 kg)	
Shipping Weight - Maximum Configuration - cardboard outside wrap not included	164 lb (73 kg)	
Heat dissipation	Minimally configured system	783W / 2672 Btu/hr
	Fully configured system	850W / 2701 Btu/hr
Clearances	**Operating**	**Service**
Front	6 in (15 cm)	6 in (15 cm)
Rear	6 in (15 cm)	6 in (15 cm)
Left Side	None	None
Right Side	None	29.5 in (75 cm)
Environmental		
Temperature	50 to 104° F (10 to 40° C)	-40 to 151° F (-40 to 66° C)
Humidity	10% to 90%	10% to 95%, Storage (60 days) 115° F/46° C
Altitude	10,000 ft (3,050 m)	40,000 ft (12,200 m)
	NOTE: Maximum operating temperature at sea level; reduce by 1.8° F (1° C) for each 2,000 ft (600 m) above sea level	
Vibration	10 to 500 Hz 0.1G peak	1.03 Grms 5-300 Hz
Shock	5G 30ms, half sine	

Acoustics (Declared values per ISO 9296 and ISO 7779)

	Idle/Operating	(Bystander pos.)
Description	LwAd, B	LpAm, dBA
ES47 Tower	6.6	47

Regulatory

Technical Specifications

Agency approvals	UL: Listed to UL 60950; cUL: Listed to CAN/CSA-C22.2 No.950 3rd Ed, 1995 CB Report to IEC 950:1991+A1: 1992 + A2: 1993 + A3: 1995 + A4:1996 CB Report to EN60950 (1992) with Amdts. 1, 2, 3, 4 and 11 FCC: Part 15.B Class A IC ICES-003 Class A CE: EN55022: 1998, EN55024: 1998, EN61000-3-2: 1995, EN61000-3-3: 1995 VCCI: V-3/02.04 Class A BSMI: CNS 13438 Class A C-Tick:AS/NZS 3548:1995 Class A

AlphaServer ES47/ES80 Rack Systems

Power Requirements	North America	Japan	International
PDU Part Number	3X-H7606-AA	3X-H7606-AA	3X-H7606-AB
Nominal voltage(s)	208	200	380/415
Phase/Frequency	3W+G, 50-60 Hz	3W+G, 50-60 Hz	3W+N+G, 50-60 Hz
Rated Current	24A	24A	24A
Line Connection	Fixed cord & plug	Fixed cord & plug	Fixed cord & plug
Power Cord	5 x 10AWG	5 x 10AWG	5 x 4 mm2
Power Plug	L21-30P, Hubbell 2811	L21-30P, Hubbell 2811	IEC 32A, Hubbell 532P6W
Main Breaker	30A	30A	30A
Sub-breakers	3 x 20A(2p), 1 x 20A(3p)	3 x 20A(2p), 1 x 20A(3p)	3 x 15A(2p), 1 x 15A(3p)
Agency	UL Listed, cUL	UL Listed, cUL	TUV & CB report
PDU Part Number	3X-H7609-EB	3X-H7609-EB	3X-H7609-DB
Nominal voltage(s)	200-240	200-240	240
Phase/Frequency	Single Phase/50-60 Hz	Single Phase/50-60 Hz	Single Phase/50-60 Hz
Phases	Single Phase	Single Phase	Single Phase
Power Plug	NEMA L6-20P	NEMA L6-20P	IEC309 type 2P+G

	ES47/ES80 Model 2	ES47/ES80 Model 4	ES80 Model 6 1 I/O Expansion Drawer	ES80 Model 8 2 I/O Expansion Drawers
Power Required, Kva	0.925	1.85	3.775	5.7
Physical Characteristics				
Dimensions (H x W x D)	79 x 24 x 47 in (200 x 60 120 cm) (41U Rack) 6 x 17.5 x 34 in (15 x 44.5 x 86 cm) (Drawer)			
Shipping dimensions	86 x 32 x 48 in (217 x 92.5 142 cm) (41U Rack)			
	ES47/ES80 Model 2 1 I/O Expansion Drawer, 1 StorageWorks Shelf, 41U Rack	ES47/ES80 Model 4 2 I/O Expansion Drawers, 1 StorageWorks Shelf, 41U Rack	ES80 Model 6 3 I/O Expansion Drawers, 1 StorageWorks Shelf, 41U Rack	ES80 Model 8 4 I/O Expansion Drawers, 1 StorageWorks Shelf, 41U Rack
Weight Maximum Configuration	706 lb (320 kg)	910 lb (412 kg)	1104 lb (500 kg)	1304 lb (591 kg)

Technical Specifications

Shipping Weight - Maximum Configuration - cardboard outside wrap not included	883 lb (400 kg)	1088 lb (493 kg)	1282 lb (581 kg)	1483 lb (672 kg)
Heat dissipation				
Minimally configured system; 1 PCI option, 1 disk, and 8 memory RDRAM RIMMs per 2P Building Block Drawer.	894 W	1788 W	2682 W	3576 W
Btu/hr	3051	6102	9153	12204
Airflow@20C DT, cfm	227	554	831	1108
Fully configured system; 3 PCI, 1 AGP, 2 disks, and 20 RDRAM RIMMs per 2P Building Block Drawer)	1930 W	3860 W	4596 W	5928 W
Btu/hr	6587	13174	15686	20230
Airflow@20C DT, cfm	492	984	1476	1968

Clearances - All Models	Operating	Service
Front	32 in (81 cm)	32 in (81 cm)
Rear	44 in (111 cm)	44 in (111 cm)
Left Side	None	None
Right Side	None	None
Environmental	**Operating**	**Non-Operating**
Temperature	50° to 104° F (10° to 40° C)	-40° to 151° F (-40° to 66° C)
Humidity	10% to 90%	10% to 95%, Storage (60 days) 115° F (16° C)
Altitude	10,000 ft (3,050 m) NOTE: Maximum operating temperature at sea level; reduce by 1.8° F (1° C) for each 2,000 ft (600 m) above sea level	40,000 ft (12,200 m)
Vibration	10 to 500 Hz 0.1G peak	1.03 Grms 5-300 Hz
Shock	5G 30ms, half sine	

Technical Specifications

Acoustics (Declared values per ISO 9296 and ISO 7779)

	Standard I/O Expansion or Master Drawer 3X-BA70A-BA	4300 Series StorageWorks Shelf DS-SL13R-xx	ES47/ES80 Model 2 # I/O Drawers	ES47/ES80 Model 4 # I/O Drawers	ES80 Model 6 # I/O Drawers	ES80 Model 8 # I/O Drawers
Idle/Operating, LwAd, B	7.1	6.9	6.6	6.9	7.1	7.2
Bystander pos., LpAm, dBA	51	53	48	51	53	54
Regulatory - Agency approvals	UL: Listed to UL 60950; cUL: Listed to CAN/CSA-C22.2 No.6950-00 CB Report to IEC 950:1991+A1: 1992 + A2:1993 + A3: 1995 + A4:1996 CB Report to EN60950 (1992) with Amdts. 1, 2, 3, 4 and 11 FCC: Part 15.B Class A IC ICES-003 Class A CE: EN55022: 1998, EN55024: 1998, EN61000-3-2: 1995, EN61000-3-3: 1995 VCCI: V-3/02.04 Class A BSMI: CNS 13438 Class A C-Tick:AS/NZS 3548:1995 Class A					

© Copyright 2007 Hewlett-Packard Development Company, L.P.
The information contained herein is subject to change without notice.
UNIX is a registered trademark or trademark of The Open Group in the U.S. and/or other countries. The only warranties for HP products and services are set forth in the express warranty statements accompanying such products and services. Nothing herein should be construed as constituting an additional warranty. HP shall not be liable for technical or editorial errors or omissions contained herein.