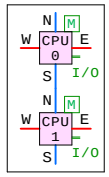

Alpha Block -Dual EV7 -64bit

The Modular AlphaServer family: ES47 Tower....GS1280 M16

Tru64 UNIX

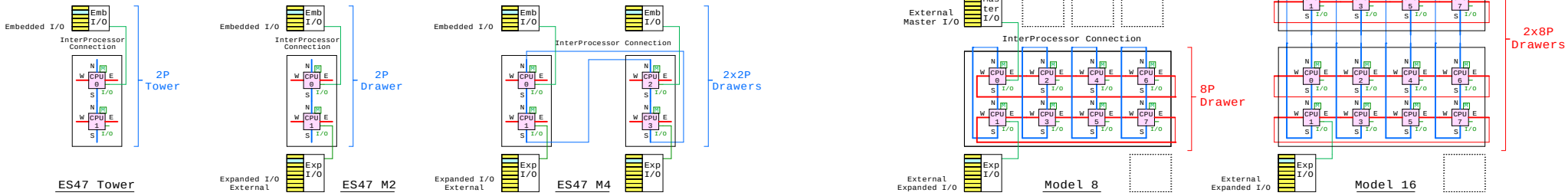

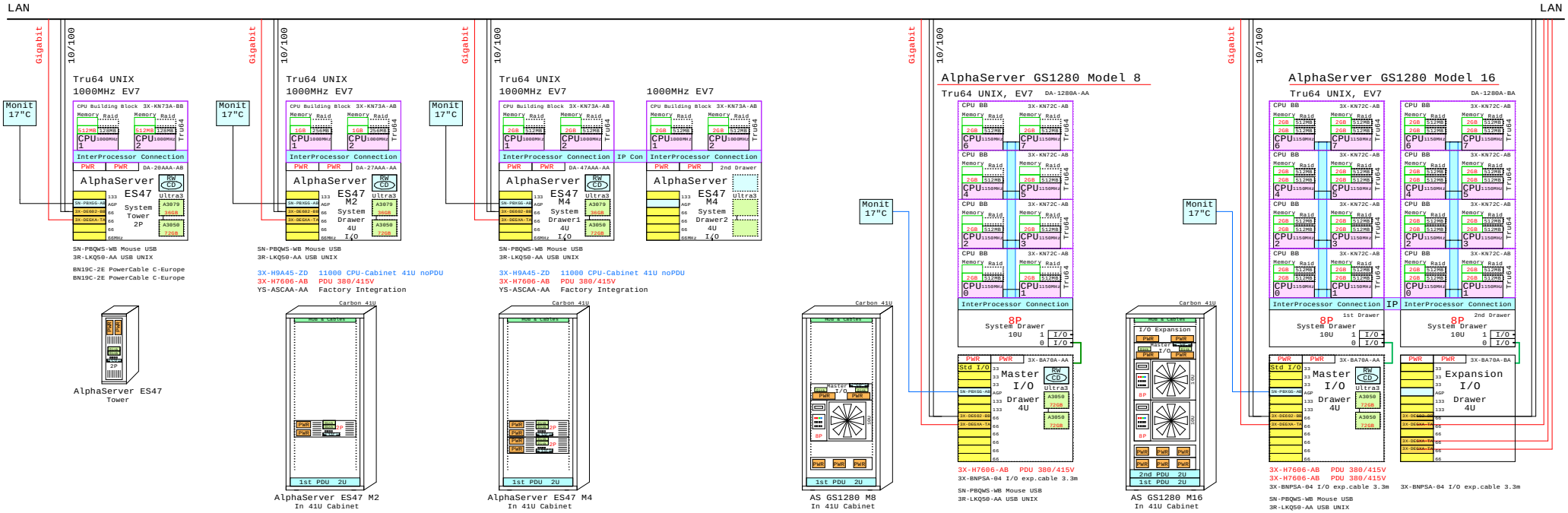

BOM of ES47 Tower

Part Number	Qty	Description
3R-A3050-AA	1	72.8GB 10000r Ultra3 SCSI disk 1"
3R-A3079-AA	1	36.4GB Uscsi3 15k Universal disk 1"
3R-A3389-AA	1	COMPAQ Monitor P720 17" NH, EU VGAcable
3R-LKQ50-AA	1	U.S/English keyboard Tru64 UNIX, USB
3X-DE602-BB	1	10/100 2xChannel Fast Ethernet, UTP
3X-DEGXA-TA	1	GigabitEthernet single-p 66MHz 3.3V
3X-KN73A-BB	1	ES47 Tower CPU-BB 2xEV7 1000MHz Tru64 UN
3X-MS7AB-CA	2	GS-ES 512MB Memory Option 4x128 RDRAM
3X-MS7AB-AC	2	GS-ES 128MB RAID Memory 1x128 RDRAM
BN19C-2E	2	PowerCable 240V, C-Europe
DA-20AAA-AB	1	AS ES47 Base System Tru64 UNIX Tower
SN-PBQWS-WB	1	Compaq 3-button mouse, USB
SN-PBXGG-AB	1	ATI Radeon 7500 2D AGP graphics accelara

BOM of ES47 M2

Part Number	Qty	Description
3R-A3050-AA	1	72.8GB 10000r Ultra3 SCSI disk 1"
3R-A3079-AA	1	36.4GB Uscsi3 15k Universal disk 1"
3R-A3389-AA	1	COMPAQ Monitor P720 17" NH, EU VGAcable
3R-LKQ50-AA	1	U.S/English keyboard Tru64 UNIX, USB
3X-DE602-BB	1	10/100 2xChannel Fast Ethernet, UTP
3X-DEGXA-TA	1	GigabitEthernet single-p 66MHz 3.3V
3X-H7606-AB	1	PDU 380/415V
3X-H9A45-ZD	1	41U 11000-Series CPU-Cabinet,no PDUs
3X-KN73A-AB	1	ES47 Cab CPU-BB 2xEV7 1000MHz Tru64 UNIX
3X-MS7AB-BA	2	GS-ES 1GBB Memory Option 4x256 RDRAM
3X-MS7AB-BC	2	GS-ES 256MB RAID Memory 1x256 RDRAM
DA-27AAA-AA	1	AS ES47 Model 2 System Tru64 UNIX 4U
SN-PBQWS-WB	1	Compaq 3-button mouse, USB
SN-PBXGG-AB	1	ATI Radeon 7500 2D AGP graphics accelara
YS-ASCAA-AA	1	System Factory Integration

BOM of ES47 M4

Part Number	Qty	Description
3R-A3050-AA	1	72.8GB 10000r Ultra3 SCSI disk 1"
3R-A3079-AA	1	36.4GB Uscsi3 15k Universal disk 1"
3R-A3389-AA	1	COMPAQ Monitor P720 17" NH, EU VGAcable
3R-LKQ50-AA	1	U.S/English keyboard Tru64 UNIX, USB
3X-DE602-BB	1	10/100 2xChannel Fast Ethernet, UTP
3X-DEGXA-TA	1	GigabitEthernet single-p 66MHz 3.3V
3X-H7606-AB	1	PDU 380/415V
3X-H9A45-ZD	1	41U 11000-Series CPU-Cabinet,no PDUs
3X-KN73A-AB	2	ES47 Cab CPU-BB 2xEV7 1000MHz Tru64 UNIX
3X-MS7AB-CA	4	GS-ES 2GBB Memory Option 4x512 RDRAM
3X-MS7AB-CC	4	GS-ES 512MB RAID Memory 1x512MB RDRAM
DA-47AAA-AA	1	AS ES47 Model 4 System Tru64 UNIX 2x4U
SN-PBQWS-WB	1	Compaq 3-button mouse, USB
SN-PBXGG-AB	1	ATI Radeon 7500 2D AGP graphics accelara
YS-ASCAA-AA	1	System Factory Integration

BOM of GS1280 M8

Part Number	Qty	Description
3R-A3050-AA	2	72.8GB 10000r Ultra3 SCSI disk 1"
3R-A3389-AA	1	COMPAQ Monitor P720 17" NH, EU VGAcable
3R-LKQ50-AA	1	U.S/English keyboard Tru64 UNIX, USB
3X-BA78A-AA	1	ES47 Master I/O drawer 4U factory inst.
3X-BNPSA-04	1	GS1280 I/O expansion cable 3.3m
3X-DE602-BB	1	10/100 2xChannel Fast Ethernet, UTP
3X-DEGXA-TA	1	GigabitEthernet single-p 66MHz 3.3V
3X-H7606-AB	1	PDU 380/415V
3X-KN72C-AB	4	GS1280 CPU-BB 2xEV7 1150MHz Tru64 UNIX
3X-MS7AB-CA	8	GS-ES 2GBB Memory Option 4x512 RDRAM
3X-MS7AB-CC	8	GS-ES 512MB RAID Memory 1x512MB RDRAM
DA-1280A-AA	1	AS GS1280 Model 8 System Tru64 UNIX Cabi
SN-PBQWS-WB	1	Compaq 3-button mouse, USB
SN-PBXGG-AB	1	ATI Radeon 7500 2D AGP graphics accelara

BOM of GS1280 M16

Part Number	Qty	Description
3R-A3050-AA	2	72.8GB 10000r Ultra3 SCSI disk 1"
3R-A3389-AA	1	COMPAQ Monitor P720 17" NH, EU VGAcable
3R-LKQ50-AA	1	U.S/English keyboard Tru64 UNIX, USB
3X-BA78A-AA	1	ES47 Master I/O drawer 4U factory inst.
3X-BA78A-BA	1	ES47 Expansion I/O drawer 4U factory ins
3X-BNPSA-04	2	GS1280 I/O expansion cable 3.3m
3X-DE602-BB	2	10/100 2xChannel Fast Ethernet, UTP
3X-DEGXA-TA	4	GigabitEthernet single-p 66MHz 3.3V
3X-H7606-AB	2	PDU 380/415V
3X-KN72C-AB	8	GS1280 CPU-BB 2xEV7 1150MHz Tru64 UNIX
3X-MS7AB-CA	32	GS-ES 2GBB Memory Option 4x512 RDRAM
3X-MS7AB-CC	32	GS-ES 512MB RAID Memory 1x512MB RDRAM
DA-1280A-BA	1	AS GS1280 Model 16 System Tru64 UNIX Cab
SN-PBQWS-WB	1	Compaq 3-button mouse, USB
SN-PBXGG-AB	1	ATI Radeon 7500 2D AGP graphics accelara

GEES47-GS1280aU

ES47-GS1280 UNIX

11-Nov-2002	GEES47-GS1280aU	
Matti.Patari@HP.com		

AlphaServer ES47-GS1280 UNIX
GOLDEN EGGS Visuals, Helsinki

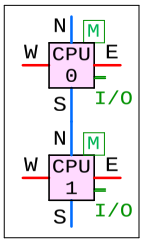

Alpha Block -Dual EV7 -64bit

The Modular AlphaServer family:

Tru64 UNIX

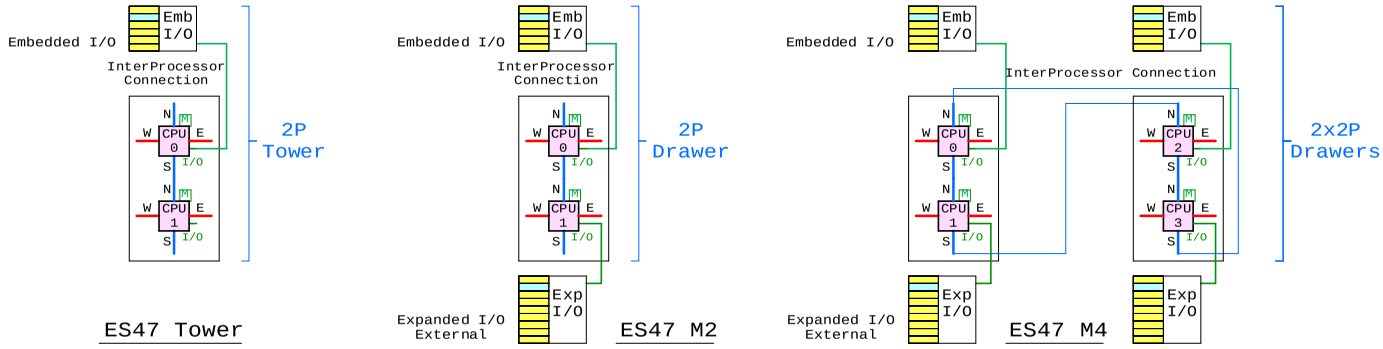

LAN

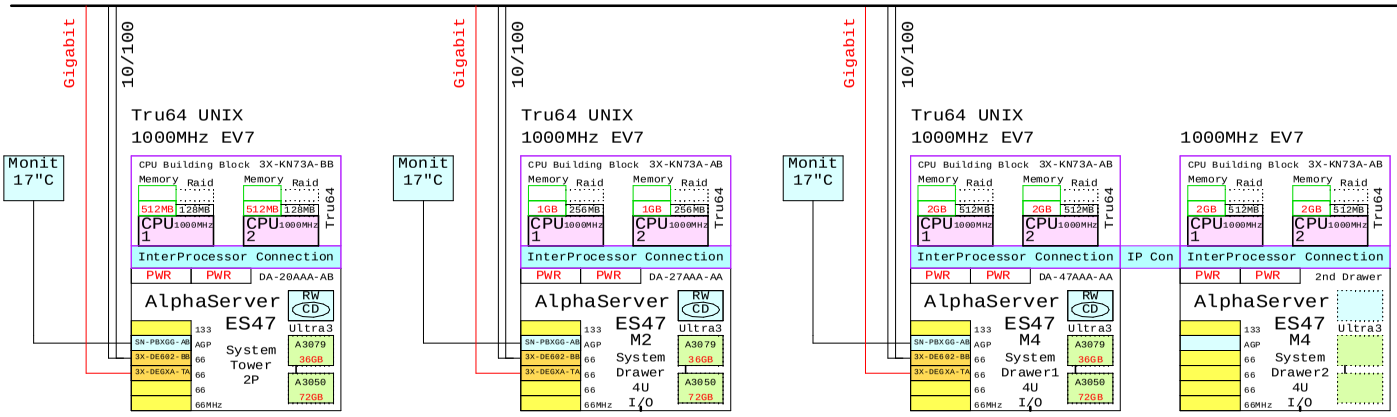

SN-PBQWS-WB Mouse USB
3R-LKQ50-AA USB UNIX

BN19C-2E PowerCable C-Europe
BN19C-2E PowerCable C-Europe

SN-PBQWS-WB Mouse USB
3R-LKQ50-AA USB UNIX

3X-H9A45-ZD 11000 CPU-Cabinet 41U noPDU
3X-H7606-AB PDU 380/415V
YS-ASCAA-AA Factory Integration

SN-PBQWS-WB Mouse USB
3R-LKQ50-AA USB UNIX

3X-H9A45-ZD 11000 CPU-Cabinet 41U noPDU
3X-H7606-AB PDU 380/415V
YS-ASCAA-AA Factory Integration

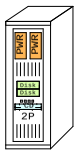

AlphaServer ES47
Tower

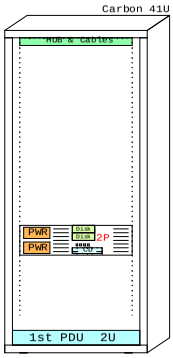

AlphaServer ES47 M2
In 41U Cabinet

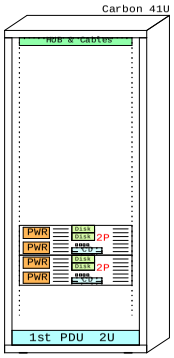

AlphaServer ES47 M4
In 41U Cabinet

BOM of ES47 Tower

Part Number	Qty	Description
3R-A3050-AA	1	72.8GB 10000r Ultra3 SCSI disk 1"
3R-A3079-AA	1	36.4GB Uscs13 15k Universal disk 1"
3R-A3389-AA	1	COMPAQ Monitor P720 17" NH, EU VGAcable
3R-LKQ50-AA	1	U.S/English keyboard Tru64 UNIX, USB
3X-DE602-BB	1	10/100 2xChannel Fast Ethernet, UTP
3X-DEGXA-TA	1	GigabitEthernet single-p 66MHz 3.3V
3X-KN73A-BB	1	ES47 Tower CPU-BB 2xEV7 1000MHz Tru64 UN
3X-MS7AB-AA	2	GS-ES 512MB Memory Option 4x128 RDRAM
3X-MS7AB-AC	2	GS-ES 128MB RAID Memory 1x128 RDRAM
BN19C-2E	2	PowerCable 240V, C-Europe
DA-20AAA-AB	1	AS ES47 Base System Tru64 UNIX Tower
SN-PBQWS-WB	1	Compaq 3-button mouse, USB
SN-PBXGG-AB	1	ATI Radeon 7500 2D AGP graphics accelara

BOM of ES47 M2

Part Number	Qty	Description
3R-A3050-AA	1	72.8GB 10000r Ultra3 SCSI disk 1"
3R-A3079-AA	1	36.4GB Uscs13 15k Universal disk 1"
3R-A3389-AA	1	COMPAQ Monitor P720 17" NH, EU VGAcable
3R-LKQ50-AA	1	U.S/English keyboard Tru64 UNIX, USB
3X-DE602-BB	1	10/100 2xChannel Fast Ethernet, UTP
3X-DEGXA-TA	1	GigabitEthernet single-p 66MHz 3.3V
3X-H7606-AB	1	PDU 380/415V
3X-H9A45-ZD	1	41U 11000-Series CPU-Cabinet,no PDUs
3X-KN73A-AB	1	ES47 Cab CPU-BB 2xEV7 1000MHz Tru64 UNIX
3X-MS7AB-BA	2	GS-ES 1GBB Memory Option 4x256 RDRAM
3X-MS7AB-BC	2	GS-ES 256MB RAID Memory 1x256 RDRAM
DA-27AAA-AA	1	AS ES47 Model 2 System Tru64 UNIX 4U
SN-PBQWS-WB	1	Compaq 3-button mouse, USB
SN-PBXGG-AB	1	ATI Radeon 7500 2D AGP graphics accelara
YS-ASCAA-AA	1	System Factory Integration

BOM of ES47 M4

Part Number	Qty	Description
3R-A3050-AA	1	72.8GB 10000r Ultra3 SCSI disk 1"
3R-A3079-AA	1	36.4GB Uscs13 15k Universal disk 1"
3R-A3389-AA	1	COMPAQ Monitor P720 17" NH, EU VGAcable
3R-LKQ50-AA	1	U.S/English keyboard Tru64 UNIX, USB
3X-DE602-BB	1	10/100 2xChannel Fast Ethernet, UTP
3X-DEGXA-TA	1	GigabitEthernet single-p 66MHz 3.3V
3X-H7606-AB	1	PDU 380/415V
3X-H9A45-ZD	1	41U 11000-Series CPU-Cabinet,no PDUs
3X-KN73A-AB	2	ES47 Cab CPU-BB 2xEV7 1000MHz Tru64 UNIX
3X-MS7AB-CA	4	GS-ES 2GBB Memory Option 4x512 RDRAM
3X-MS7AB-CC	4	GS-ES 512MB RAID Memory 1x512MB RDRAM
DA-47AAA-AA	1	AS ES47 Model 4 System Tru64 UNIX 2x4U
SN-PBQWS-WB	1	Compaq 3-button mouse, USB
SN-PBXGG-AB	1	ATI Radeon 7500 2D AGP graphics accelara
YS-ASCAA-AA	1	System Factory Integration

ES47 Tower....GS1280 M16

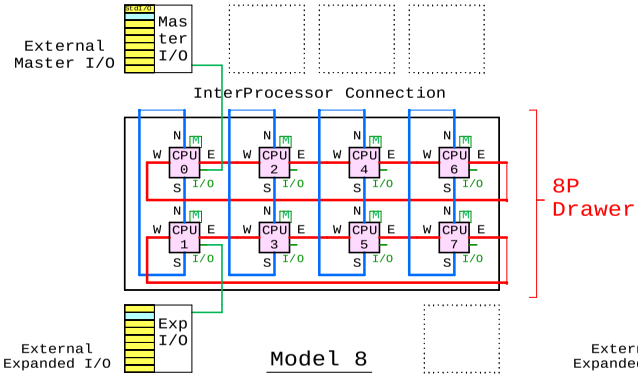

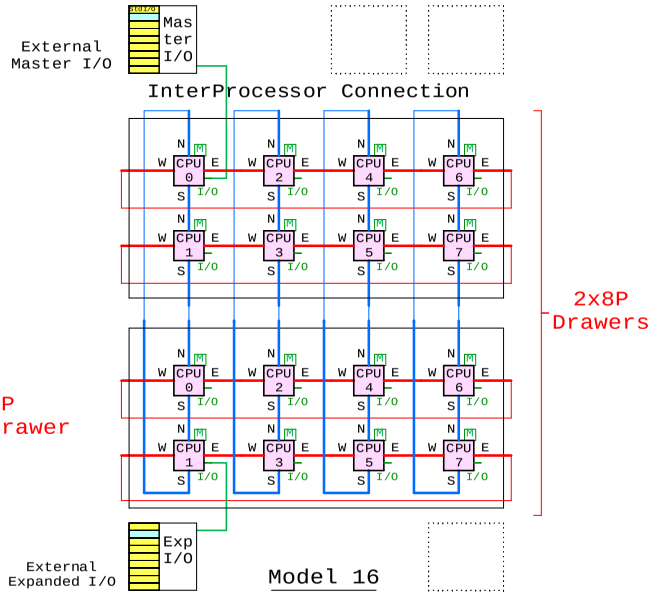

LAN

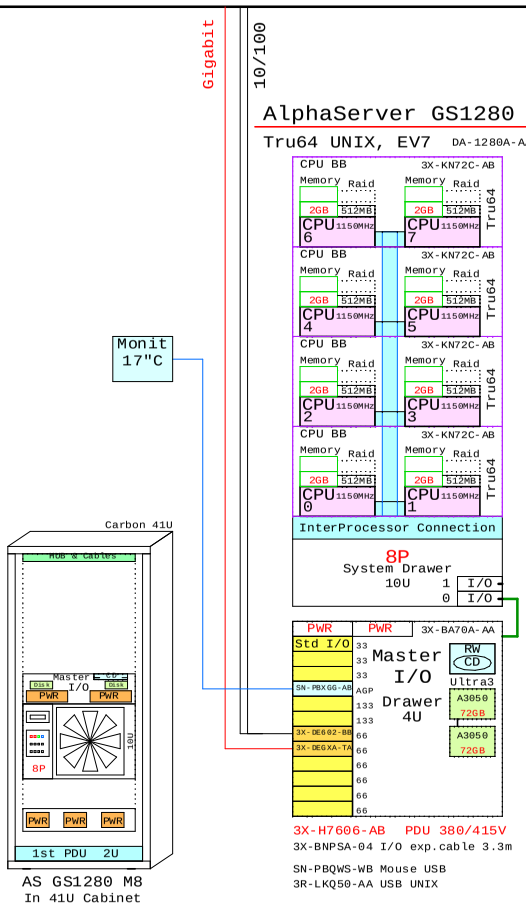

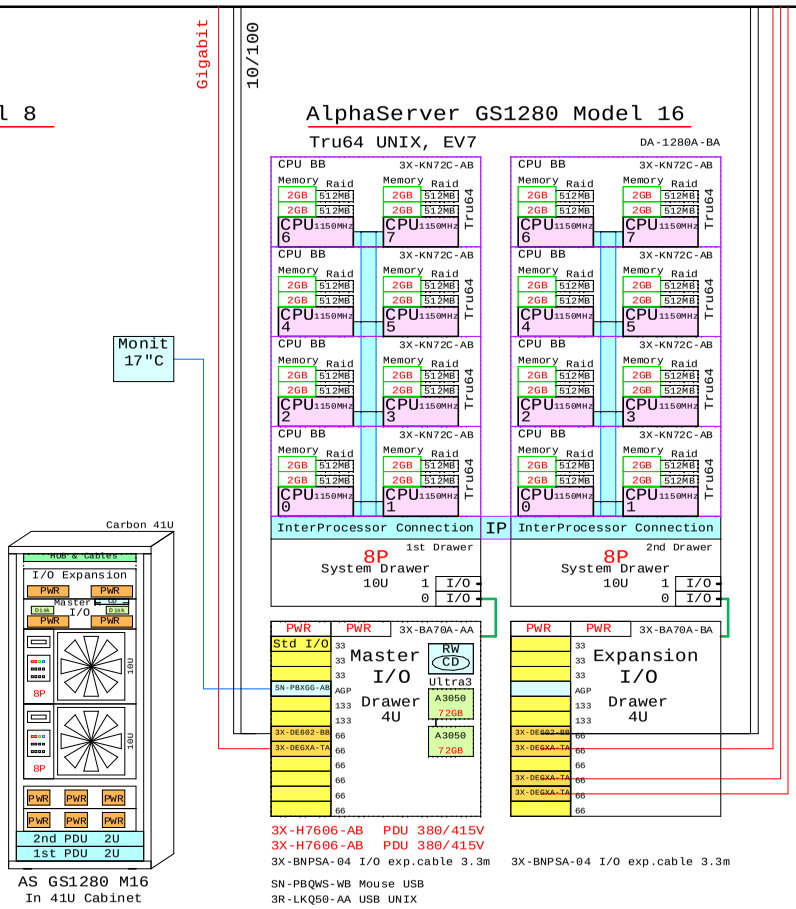

BOM of GS1280 M8

Part Number	Qty	Description
3R-A3050-AA	2	72.8GB 10000r Ultra3 SCSI disk 1"
3R-A3389-AA	1	COMPAQ Monitor P720 17" NH, EU VGAcable
3R-LKQ50-AA	1	U.S/English keyboard Tru64 UNIX, USB
3X-BA70A-AA	1	ES47 Master I/O drawer 4U factory inst.
3X-BNPSA-04	1	GS1280 I/O expansion cable 3.3m
3X-DE602-BB	1	10/100 2xChannel Fast Ethernet, UTP
3X-DEGXA-TA	1	GigabitEthernet single-p 66MHz 3.3V
3X-H7606-AB	1	PDU 380/415V
3X-KN72C-AB	4	GS1280 CPU-BB 2xEV7 1150MHz Tru64 UNIX
3X-MS7AB-CA	8	GS-ES 2GBB Memory Option 4x512 RDRAM
3X-MS7AB-CC	8	GS-ES 512MB RAID Memory 1x512MB RDRAM
DA-1280A-AA	1	AS GS1280 Model 8 System Tru64 UNIX Cabi
SN-PBQWS-WB	1	Compaq 3-button mouse, USB
SN-PBXGG-AB	1	ATI Radeon 7500 2D AGP graphics accelara

BOM of GS1280 M16

Part Number	Qty	Description
3R-A3050-AA	2	72.8GB 10000r Ultra3 SCSI disk 1"
3R-A3389-AA	1	COMPAQ Monitor P720 17" NH, EU VGAcable
3R-LKQ50-AA	1	U.S/English keyboard Tru64 UNIX, USB
3X-BA70A-AA	1	ES47 Master I/O drawer 4U factory inst.
3X-BA70A-BA	1	ES47 Expansion I/O drawer 4U factory ins
3X-BNPSA-04	2	GS1280 I/O expansion cable 3.3m
3X-DE602-BB	2	10/100 2xChannel Fast Ethernet, UTP
3X-DEGXA-TA	4	GigabitEthernet single-p 66MHz 3.3V
3X-H7606-AB	2	PDU 380/415V
3X-KN72C-AB	8	GS1280 CPU-BB 2xEV7 1150MHz Tru64 UNIX
3X-MS7AB-CA	32	GS-ES 2GBB Memory Option 4x512 RDRAM
3X-MS7AB-CC	32	GS-ES 512MB RAID Memory 1x512MB RDRAM
DA-1280A-BA	1	AS GS1280 Model 16 System Tru64 UNIX Cab
SN-PBQWS-WB	1	Compaq 3-button mouse, USB
SN-PBXGG-AB	1	ATI Radeon 7500 2D AGP graphics accelara

GEES47-GS1280aU

11-Nov-2002	GEES47-GS1280aU
Matti.Patari@HP.com	

AlphaServer ES47-GS1280 UNIX
GOLDEN EGGS Visuals, Helsinki

ES47-GS1280 UNIX