DS25 SCSI HVD Cluster OpenVMS

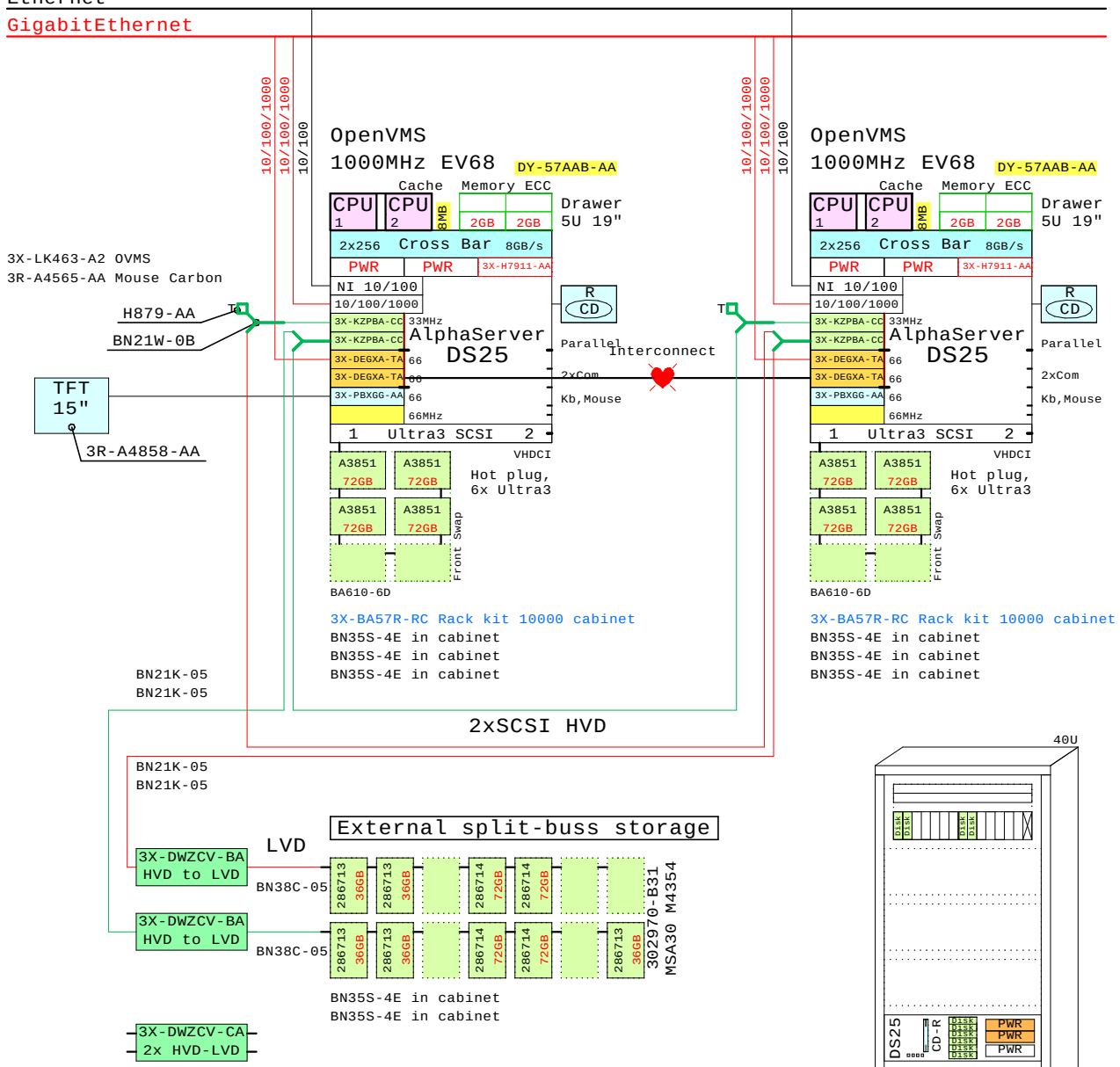

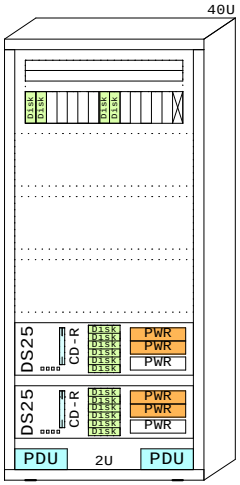

Bill of material for this SCSI Cluster

	Part Number	Qty	Description
1	DY-57AAB-AA	1	AS DS25 68/1000 0MB,Rack,5U,OVMS
1.1	3X-DEGXA-TA	2	GigabitEthernet single-p 66MHz 3.3V
1.2	3X-H7911-AA	1	Third power supply for DS25 500W
1.3	3X-KN410-CC	1	AS DS25 68/1000 SMP UPG OpenVMS
1.4	3X-KZPBA-CC	2	PCI to UltraSCSI Adapter UWdif
1.5	3X-PBXGG-AA	1	ATI RADEON 7500 64MB 2D/3D graphics acce
1.6	3x-MS350-EA	2	DS25 2GB DIMM MEM 4x512MB
1.7	BA610-6D	1	ES40 Disk Drive Cage, 6-Bay
1.7.1	3R-A3851-AA	4	72.8GB 15000r U320 SCSI disk 1"
2	DY-57AAB-AA	1	AS DS25 68/1000 0MB,Rack,5U,OVMS
2.1	3X-DEGXA-TA	2	GigabitEthernet single-p 66MHz 3.3V
2.2	3X-H7911-AA	1	Third power supply for DS25 500W
2.3	3X-KN410-CC	1	AS DS25 68/1000 SMP UPG OpenVMS
2.4	3X-KZPBA-CC	2	PCI to UltraSCSI Adapter UWdif
2.5	3X-PBXGG-AA	1	ATI RADEON 7500 64MB 2D/3D graphics acce
2.6	3x-MS350-EA	2	DS25 2GB DIMM MEM 4x512MB
2.7	BA610-6D	1	ES40 Disk Drive Cage, 6-Bay
2.7.1	3R-A3851-AA	4	72.8GB 15000r U320 SCSI disk 1"
3	302970-B31	1	MSA30 M4354R dual buss, 7+7, 1.0"
3.1	286713-B22	5	36GB 10000r U320 disk 1"
3.2	286714-B22	4	72.8GB 10000r U320 disk 1"
4	YS-ASCAA-AA	1	System Factory Integration
5	3R-A4858-AA	1	L1530 15" TFT panel monitor EU
6	3X-H7606-EB	2	PDU 240V for 10000 cabinet
7	3R-A3894-AA	1	41U 10000-Series Graphite Cab,no PDUs
8	3X-DWZCV-BA	2	Adapter SCSI HVD to LVD
9	3X-BA57R-RC	2	Rackm.kit, DS25,1000MHz for Cab 10000
10	3R-A3895-AA	1	Side panel kit for 10000 cabinet
11	2T-H9C30-MK	1	Stabilazer Kit for 10000 cabinets
12	2T-H9C30-MA	1	Ballast Kit for 10000 cabinets
13	3R-A4565-AA	1	3-button mouse,Carbon night dark
14	BN35S-4E	8	PowerCord C13 to C14, Non US
15	3X-LK463-A2	1	U.S/English keyboard OpenVMS
16	BN38C-05	2	Ultra Cbl VHDCI - 68HD
17	BN21K-05	4	68HD SCSI cable 5m
18	BN21W-0B	4	Y SCSI-2 Cable 68 pins/6".15m
19	H879-AA	2	SCSI-3 Term - 68 pin Male

Cabinet 10000 acessories:

3R-A3894-AA 10000 Cabinet 41U noPDU
3X-H7606-EB PDU 240V for 10000 cabinet
3X-H7606-EB PDU 240V for 10000 cabinet
3R-A3895-AA Side panels for 10000
2T-H9C30-MK Stabilazer kit 10000
2T-H9C30-MA Ballast kit 10000

YS-ASCAA-AA Factory Integration

If this diagram has influenced on your purchase decision,please let us know.
Matti.Patari@Kolumbus.fi (the painter)

If you need a customized PDF diagram from this template, please let me know.
Send you change of request,the wish list to: Matti.Patari@Kolumbus.fi

GOLDEN EGGS Visuals Helsinki	31-Jan-2005	GTAVDS25b
	Matti.Patari@Kolumbus.fi	

HP AlphaServer DS25 Cluster,SCSI
GOLDEN EGGS Visuals, Helsinki

DS25 OVMS

Generated with fresh GOLDEN EGGS Software, Rev:18-Apr-2004