Internal Options:

- CPU — 3X-KN410-CB — Tru64 UNIX SMP
- CPU — 3X-KN410-CC — OpenVMS SMP
- 512MB — 3x-MS350-CA
- 1GB — 3x-MS350-DA
- 2GB — 3x-MS350-EA
- 4GB — 3x-MS350-FA — Memory options
- 3X-H7911-AA — 3rd Power for N+1
- BA610-6D — Internal disk cage
- A3848 18GB — 1.0" — 3R-A3848-AA — 18G 15k U320
- A3849 36GB — 1.0" — 3R-A3849-AA — 36G 15k U320
- A3851 72GB — 1.0" — 3R-A3851-AA — 72G 15k U320
- A3841 146GB — 1.0" — 3R-A3841-AA — 146G 10k U320
- A3621 AIT200G — 3R-A3621-AA — AIT 100/200GB, Eats two slots
- 3X-PBXGG-AA — ATI RADEON 7500
- 3X-DE602-BB — 2x Ethernet
- 3X-DEGXA-TA — UTP/RJ45 GigabitE.
- 3X-KZPCA-AA — 1-port Ultra2 SCSI LVD
- 3X-KZPEA-DB — 2-port Ultra3 SCSI LVD2
- 3X-KZPDC-BE — RAID 2-ch U160 66MHz
- DS-KGPSA-EA — Fibre Ch 2Gbit/s

BN35S-4E pwr cbl in cabinet
3X-BA57R-RA Rack kit M-series

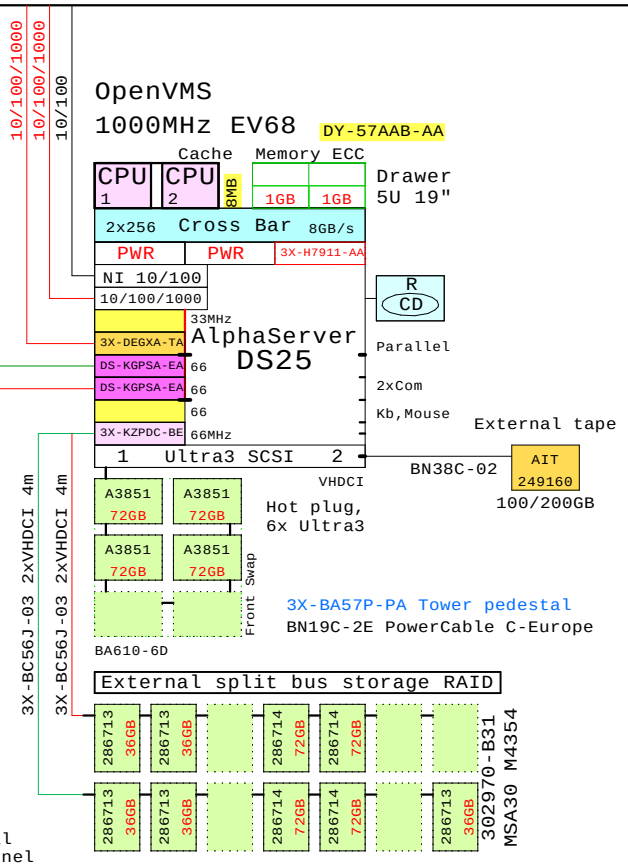

Recomended options:

- TFT 18" — 3R-A4292-AA — 3X-PBXGG-AA — ATI RADEON

Mandatory options:

- -Memory kit — 512MB
- -Disk cage
- -System disk — A3849 36GB

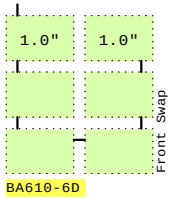

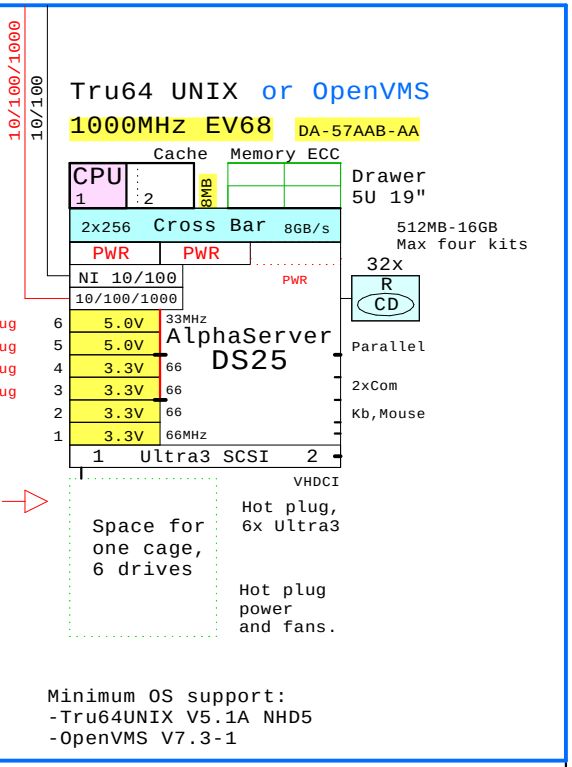

-One rack kit:

3X-BA57P-PA Tower pedestal
3X-PBX01-DB Rack kit 10000 cabinet

Minimum OS support:
-Tru64UNIX V5.1A NHD5
-OpenVMS V7.3-1

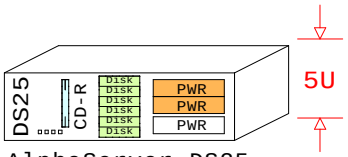

AlphaServer DS25

3R-A4565-AA Mouse Carbon
3R-A4362-AA U.S/Engl UNIX kb
3X-LK463-A2 OVMS
BN19C-2E PowerCable C-Europe

3X-BC34A-06 Kb or Mouse ext.
BN39C-02 Video Ext.cbl

If this diagram has influenced on your purchase decision,please let us know.
Matti.Patari@Kolumbus.fi (the painter)

BOM of the OpenVMS system above

	Part Number	Qty	Description
1	DY-57AAB-AA	1	AS DS25 68/1000 0MB,Rack,5U,OVMS
1.1	3X-BA57P-PA	1	DS25 Mini tower pedestal kit,1000MHz
1.2	3X-DEGXA-TA	1	GigabitEthernet single-p 66MHz 3.3V
1.3	3X-H7911-AA	1	Third power supply for DS25 500W
1.4	3X-KN410-CC	1	AS DS25 68/1000 SMP UPG OpenVMS
1.5	3X-KZPDC-BE	1	U160 2-Ch RAID 128MB PCI 66MHz 3.3v
1.6	3x-MS350-DA	2	DS25 1GB DIMM MEM 4x256MB
1.7	BA610-6D	1	ES40 Disk Drive Cage, 6-Bay
1.7.1	3R-A3851-AA	4	72.8GB 15000r U320 SCSI disk 1"
1.8	BN19C-2E	1	PowerCable 240V, C-Europe
1.9	DS-KGPSA-EA	2	PCI-X to Fibre Channel adapter,2Gbit/s
2	302970-B31	1	MSA30 M4354R dual buss, 7+7, 1.0"
2.1	286713-B22	5	36GB 10000r U320 disk 1"
2.2	286714-B22	4	72.8GB 10000r U320 disk 1"
3	249160-B31	1	AIT 100/200GB LVD TableTop Int. black
4	3X-BC56J-03	2	Ultra3 160 Cable VHDCI-VHDCI 12ft
5	BN38C-02	1	Ultra Cbl VHDCI - 68HD

Order numbers for DS25 AlphaServers and AlphaStations

Part Number	Qty	Description
DA-57AAB-AA	1	AS DS25 68/1000 0MB,Rack,5U,UNIX
DA-57AAB-AW	1	ASW DS25 68/1000 0MB,Rack,5U,UNIX
DY-57AAB-AA	1	AS DS25 68/1000 0MB,Rack,5U,OVMS
DY-57AAB-AW	1	ASW DS25 68/1000 0MB,Rack,5U,OVMS

Software Processor Code:E
Cluster Software Code:C

For more detailed configuring, please consult the latest HP QuickSpecs.
Generated with fresh GOLDEN EGGS Software, Rev:23-Jul-2004

DS25

GOLDEN EGGS Visuals Helsinki	31-Jan-2005	GEADS25b
	Matti.Patari@Kolumbus.fi	

HP AlphaServer DS25 1000MHz EV68
GOLDEN EGGS Visuals, Helsinki