Overview

At A Glance

AlphaServer™/*AlphaStation* ™ DS25 Systems include:

- Alpha 21264C 1000-MHz processor (dual processor capability) with 8-MB L2 Dual Data Rate cache
- ECC-protected memory bus and cache
- 512-MB, 1-GB, 2-GB, 4-GB SDRAM memory expandable to 16 GB
- Six 64-bit PCI I/O expansion slots
- Three PCI buses
  - Two 66-MHz PCI buses
  - One 33-MHz PCI bus
- Six hot swap hard disk drive bays
- Internal mass storage capacity up to 436 GB
- Integrated dual Ultra3 SCSI adapter
- Integrated dual Ethernet (10/100 and 10/100/1000) adapters
- Two 361-Watt hot pluggable power supplies with optional third for N+1 redundancy
- 32X CD-R drive
- Protected by HP Services, including a one-year on-site limited warranty, on-site with 5 x 9 next business day response

NOTE: Certain restrictions and exclusions may apply. For details, consult the Product Information Centre at 1-888-882-6672.

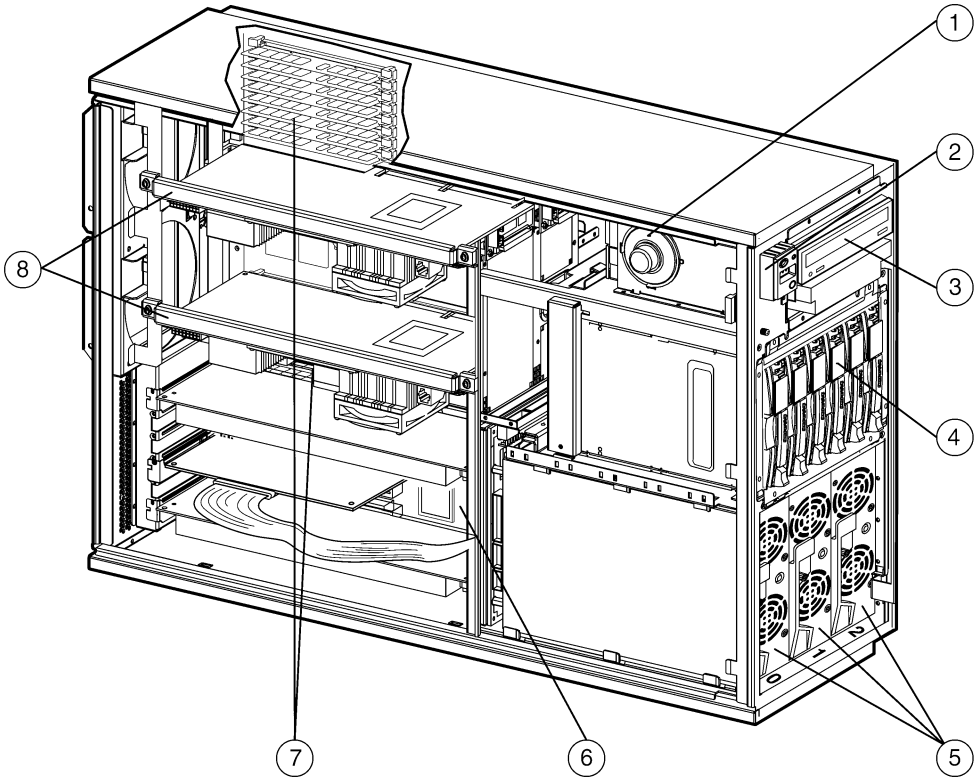

1. Speaker
2. Operator control panel
3. CD-R drive
4. Hard disk drives
5. Power supplies
6. PCI I/O slots
7. Memory
8. CPUs

Standard Features

Processor	Alpha 21264C 1000-MHz processor	
Cache Memory	8-MB level 2 dual data rate cache per processor	
Upgradability	System upgradeable to dual processing	
Memory	Minimum	512-MB, 1-GB, 2-GB, or 4-GB ECC SDRAM memory standard
	Maximum	16 GB
Network Controller	Integrated dual Ethernet adapters (one 10/100 and one 10/100/1000)	
Expansion	PCI I/O slots	6 total slots - Slots 1-4 run @ 64-bit/66 MHz - Slots 5 and 6 run @ 64-bit/33 MHz
Storage Controller	Integrated dual Ultra3SCSI adapter	
Storage	CD-R	32X Max IDE CD-R Drive
	Internal Hard Drives	Choice of 18.2-GB, 36.4-GB, or 72.8-GB drives
	Maximum Internal Storage	436 GB
Interfaces	Parallel	1
	Serial	2
	Pointing Device (Mouse)	1
	Keyboard	1
	SCSI knockouts on rear of chassis	2 SCSI knockouts, 1 used by one channel on onboard Adaptec
	Ethernet	2 (10/100 and 10/100/1000)
Form Factor	Rackmount or Tower	
Manageability	Compaq *Insight Manager*™	
Power Supply	Two 361-Watt hot plug power supplies, standard; optional third N+1 for redundancy Hot plug redundant power supply support; hot plug fan support	
OS Support	AlphaServer DS25 *Tru64*™ UNIX™ systems include pre-installed software (V5.1A NHD5), Base license, Unlimited User license, Server Extension license, Internet Express and iPlanet Web Server – Enterprise Edition 4.0. AlphaStation DS25 Tru64 UNIX systems include pre-installed software (V5.1A NHD5), 2-user Base license. AlphaServer DS25 *OpenVMS*™ systems include pre-installed software (V7.3-1), Base license with System Manager license and Enterprise Integration Server License Package for OpenVMS V3.1 AlphaStation DS25 OpenVMS systems include pre-installed software (V7.3-1), Base license, Concurrent Use 1-user license, NAS 150 Client license, and Compaq Open3D traditional license Minimum OS support: Tru64 UNIX V5.1A, OpenVMS V7.3-1	
Service and Support	Protected by HP Services including a one-year on-site hardware warranty with next business day response. Training, consulting, network integration, software support, comprehensive system maintenance and guaranteed uptime services are also available for customers requiring higher levels of service and support. **NOTE**: Certain restrictions and exclusions may apply. For details, consult the Product Information Centre at 1-888-882-6672.	

PCI Configuration Guidelines

- Modules designed for 5.0V signaling and 33-MHz bus speed can only operate in 5.0V/33-MHz slots (slots 5 and 6).
- A maximum total of two 5V modules can be installed in the system.
- Modules designed for 3.3 V signaling and 66-MHz bus speed can only operate in 66-MHz slots (slots 1, 2, 3, 4).
- Universal PCI modules can operate in all slots (3.3V and 5.0V).
- Universal PCI modules can operate at a maximum bus speed of 33 MHz or 66 MHz.
- Universal PCI modules operating at 33 MHz placed in a 66-MHz slot will reduce the entire hose to operate at 33 MHz.
- Universal PCI modules capable of operating at 66 MHz when placed in a 33-MHz slot will operate at 33 MHz.

PCI Module Descriptions:

PCI modules listed in this document as 33 MHz or 66 MHz refers to the module's maximum PCI bus speed.

- Modules that can only operate at 5V are designated as 5V – 33-MHz modules.
- Universal PCI modules are designated as 3.3/5V and can be installed into 33-MHz or 66-MHz slots.

The AlphaServer DS25 provides three PCI buses (hoses) that drive the six slots. A fourth hose drives the on-board Gbit Ethernet and dual channel Ultra3SCSI adapter.

- Hose 0 – 33 MHz driving slots 5 and 6 (slot 6 is half-length)
- Hose 3 – 66 MHz driving slots 3 and 4
- Hose 1 – 66 MHz driving slots 1 and 2

The DS25 PCI bus and slot specifications follow:

PCI Slot	PCI Bus Speed	Signal Voltage	PCI Hot-Plug	PCI Hose Number
1	66 MHz	3.3V	No	1
2	66 MHz	3.3V	No	1
3	66 MHz	3.3V	Yes	3
4	66 MHz	3.3V	Yes	3
5	33 MHz	5.0V	Yes	0
6	33 MHz	5.0V	Yes	0

Systems/Options

Step 1 – Select system

AlphaServer/AlphaStation DS25 systems require the **mandatory** selection of the following items:

- Pedestal/tower or rackmount bezel kit (Step 2a)
- Disk drive cage (Step 2b)
- System disk drive (Step 2c)
- Two power cords (Step 2d)
- Order country-specific keyboard and mouse only if required. (Step 16)
- Software media and documentation for first system onsite. (Step 18)

NOTES: DS25 minimum OS support –Tru64 UNIX V5.1A NHD5, OpenVMS V7.3-1.
For system integration of options with 6-3 part numbers, contact CustomSystems.
Option part numbers identified with the notation "U.S./Canada orders" and "Other country orders" refers specifically to the country where the order originates, and indicates the valid and orderable part numbers in the respective geographies.

AlphaServer DS25 Systems			
OS	**CPU**	**Memory/Cache**	**Order Number**
Tru64 UNIX	1000 MHz	512 MB/8 MB	DA-57AAA-CA
Tru64 UNIX	1000 MHz	1 GB/8 MB	DA-57AAA-DA
Tru64 UNIX	1000 MHz	2 GB/8 MB	DA-57AAA-EA
Tru64 UNIX	1000 MHz	4 GB/8 MB	DA-57AAA-FA
OpenVMS	1000 MHz	512 MB/8 MB	DY-57AAA-CA
OpenVMS	1000 MHz	1 GB/8 MB	DY-57AAA-DA
OpenVMS	1000 MHz	2 GB/8 MB	DY-57AAA-EA
OpenVMS	1000 MHz	4 GB/8 MB	DY-57AAA-FA
AlphaStation DS25 Systems			
Tru64 UNIX	1000 MHz	512 MB/8 MB	DA-57AAA-CW
Tru64 UNIX	1000 MHz	1 GB/8 MB	DA-57AAA-DW
Tru64 UNIX	1000 MHz	2 GB/8 MB	DA-57AAA-EW
Tru64 UNIX	1000 MHz	4 GB/8 MB	DA-57AAA-FW
OpenVMS	1000 MHz	512 MB/8 MB	DY-57AAA-CW
OpenVMS	1000 MHz	1 GB/8 MB	DY-57AAA-DW
OpenVMS	1000 MHz	2 GB/8 MB	DY-57AAA-EW
OpenVMS	1000 MHz	4 GB/8 MB	DY-57AAA-FW

Step 2 – Select mandatory options

Step 2a – Bezel Kits – Mandatory

- Pedestal/Tower kit or Rackmount kit is mandatory for each system

Pedestal/Tower bezel kit	3X-BA57P-PA
Rackmount bezel kit (M-Series Cabinets)	3X-BA57R-RA
Rackmount bezel kit for Compaq Series 9000 Cabinets (Onsite integration only – contact CustomSystems if factory integration is required)	3X-BA57R-RC

Options

Step 2 – Select mandatory options *(continued)*

Step 2b – Disk Drive Cage – Mandatory

- Systems support one disk drive cage; disk drive cage supports six 1-inch hard disk drives or a combination of 1-inch disk drives and hot-plug Universal tape devices. Each tape device uses two slots in the BA610-6D.

6-bay disk drive cage	BA610-6D

Step 2c – System Disk Drive (Supported in Disk Drive Cage) – Mandatory

- Selection of one disk drive is mandatory

18.2-GB Ultra3 SCSI 10,000 rpm 1-inch Universal disk drive	3R-A0585-AA
18.2-GB Ultra3 SCSI 15,000 rpm 1-inch Universal disk drive	3R-A1543-AA
36.4-GB Ultra3 SCSI 10,000 rpm 1-inch Universal disk drive	3R-A0919-AA
36.4-GB Ultra3 SCSI 15,000 rpm 1-inch Universal disk drive	3R-A3079-AA
72.8-GB Ultra3 SCSI 10,000 rpm 1-inch Universal disk drive	3R-A3050-AA

Step 2d – Power Cords – Mandatory

- Selection of two power cords is mandatory for all systems

Pedestal Power Cords	North American 120V, 75-inches	BN26J-1K
	Australia, New Zealand, 2.5-metre	BN19H-2E
	Central Europe, 2.5-metre	BN19C-2E
	Denmark, 2.5-metre	BN19K-2E
	Egypt, India, South Africa, 2.5-metre	BN19S-2E
	Israel, 2.5-metre	BN18L-2E
	Italy, 2.5-metre	BN35M-02
	Japan, 2.5-metre	3X-BN46F-02
	Switzerland, 2.5-metre	BN19E-2E
	UK, Ireland, 2.5-metre	BN19A-2E
Rackmount Power Cords	All Countries	BN35S-4E

Step 3 – Additional CPU Modules – Optional

- One 68/1000-MHz CPU included, one additional CPU supported

SMP upgrade includes one 68/1000-MHz CPU with 8-MB cache and Tru64 UNIX SMP license	3X-KN410-BB
SMP upgrade includes one 68/1000-MHz CPU with 8-MB cache and OpenVMS SMP license	3X-KN410-BC

Step 4 – Memory – Optional

- System includes one memory option; up to three additional memory options can be added. Configurations with more than 8 GB require three power supplies (Step 5). N+1 redundancy functionality is not available in configurations over 8GB.

512-MB memory option (4 x 128-MB DIMMs)	3X-MS350-CA
1-GB memory option (4 x 256-MB DIMMs)	3X-MS350-DA
2-GB memory option (4 x 512-MB DIMMs)	3X-MS350-EA
4-GB memory option (4 x 1-GB DIMMs)	3X-MS350-FA

Step 5 – Additional Power Supplies – Optional

- Two 361 watt power supplies included with system; optional third power supply provides N+1 redundancy (power cord not included, select power cord from Step 2d)

DS20E/DS25 redundant power supply	FR-H7910-AA

Options

Step 6 – Internal Tape Storage – Optional

- BA610-6D drive cage drives connected to integrated UltraSCSI 3 adapter supports LVD Universal tape. Each device uses two slots

AIT 35/70-GB hot plug LVD Universal tape drive, uses two slots in BA610-6D or 43xxx shelves	3R-A2396-AA
AIT 50/100-GB hot plug LVD Universal tape drive, uses two slots in BA610-6D or 43xxx shelves	3R-A2779-AA
DAT 20/40-GB DDS4 hot plug LVD Universal tape drive, uses two slots in BA610-6D or 43xxx shelves	3R-A2780-AA

Step 7 – External Storage – Optional

***StorageWorks*™ Model 4314R and Model 4354R Universal Drive Shelves**

- StorageWorks Model 4314R, 4314T, and 4354R Ultra3 SCSI (LVD) single-bus and split-bus Universal drive shelves; refer to StorageWorks Enclosure 4300 Family QuickSpecs when configuring shelves. When selecting a DS-SL13R-Bx split-bus shelf, two SCSI channels are required. No support for Model 4314R or 4314T single-bus shelves with embedded Ultra3SCSI adapter or 3X-KZPEA-DB adapter. BN38C-xx cable is required when connecting to embedded Ultra3SCSI adapter. Note that the depth of a DS-SL13R-xx shelf does not allow front and rear mounting.

StorageWorks Model 4314R Ultra3 SCSI (LVD) single-bus Universal drive rackmount shelf, includes one power supply. No support for Model 4314R single-bus shelves with embedded Ultra3SCSI adapter or 3X-KZPEA-DB adapter	DS-SL13R-AA (All regions except Japan)
StorageWorks Model 4314R Ultra3 SCSI (LVD) single-bus Universal drive rackmount shelf, includes one power supply. No support for Model 4314R single-bus shelves with embedded Ultra3SCSI adapter or 3X-KZPEA-DB adapter	190209-291 (U.S./Canada orders for Japan variant)
StorageWorks Model 4314R Ultra3 SCSI (LVD) single-bus Universal drive rackmount shelf, includes one power supply. No support for Model 4314R single-bus shelves with embedded Ultra3SCSI adapter or 3X-KZPEA-DB adapter	DS-SL13R-AJ (Non U.S./Canada orders for Japan variant)
StorageWorks Model 4354R Ultra3 SCSI (LVD) split-bus Universal drive rackmount shelf, includes two redundant power supplies, U.S.	DS-SL13R-BA (All regions except Japan)
StorageWorks Model 4354R Ultra3 SCSI (LVD) split-bus Universal drive rackmount shelf, includes two redundant power supplies, Japan	190211-291 (U.S./Canada orders for Japan variant)
StorageWorks Model 4354R Ultra3 SCSI (LVD) split-bus Universal drive rackmount shelf, includes two redundant power supplies, Japan	DS-SL13R-BJ (Non U.S./Canada orders for Japan variant)

StorageWorks Model 4314T Standalone Enclosure for Universal Drives

Model 4314T Ultra3 SCSI, single-bus tower enclosure, US. No support for Model 4314T single-bus shelves with embedded Ultra3SCSI adapter or 3X-KZPEA-DB adapter	DS-SL13T-AA
Model 4314T Ultra3 SCSI, single-bus tower enclosure, International. No support for Model 4314T single-bus shelves with embedded Ultra3SCSI adapter or 3X-KZPEA-DB adapter	DS-SL13T-AB
Model 4314T Ultra3 SCSI, single-bus tower enclosure, Japan. No support for Model 4314T single-bus shelves with embedded Ultra3SCSI adapter or 3X-KZPEA-DB adapter	DS-SL13T-AJ

StorageWorks Model 4314 Options

StorageWorks enclosure redundant power supply	DS-SE2UP-AA (119826-B21)

Options

Step 8 – Storage Devices – Optional

Disk Drives *(Supported in Model 4314R and Model 4354R Universal Drive Shelves)*	18.2-GB Ultra3 SCSI 10,000 rpm 1-inch Universal disk drive	3R-A0585-AA
	18.2-GB Ultra3 SCSI 15,000 rpm 1-inch Universal disk drive	3R-A1543-AA
	36.4-GB Ultra3 SCSI 10,000 rpm 1-inch Universal disk drive	3R-A0919-AA
	36.4-GB Ultra3 SCSI 15,000 rpm 1-inch Universal disk drive	3R-A3079-AA
	72.8-GB Ultra3 SCSI 10,000 rpm 1-inch Universal disk drive	3R-A3050-AA

UltraSCSI Configuration Rules

- UltraSCSI configurations require UltraSCSI components (controllers, adapters, shelves, disks, and cables)
- UltraSCSI adapters and RAID controllers support UltraSCSI disks at UltraSCSI speeds in UltraSCSI shelves
- Mixing faster SCSI devices with slower SCSI devices will slow that entire SCSI bus to the slower speed.

Tape Drives

- Tabletop tape drives require LVD host bus adapter and country-specific power cord
- Tape media may not be included, for more information see http://www.compaq.com/storage/productindextape.html

NOTE: This web site is available in English only.

AIT Tape Drives	AIT 35/70-GB hot plug LVD Universal tape drive uses two slots in BA610-6D or 43xxx shelves	3R-A2396-AA
	AIT 50/100-GB hot plug LVD Universal tape drive uses two slots in BA610-6D or 43xxx shelves	3R-A2779-AA
	AIT 50/100-GB 8 mm SCSI tabletop tape drive with 120V North American power cord; requires 3X-KZPCA-AA LVD adapter	157767-002
	AIT 50/100-GB 8 mm SCSI tabletop tape drive, International; requires 3X-KZPCA-AA LVD adapter	157767-B32
	AIT 50/100-GB 8 mm SCSI tabletop tape drive, Japan; requires 3X-KZPCA-AA LVD adapter	157767-292
AIT Tape Libraries	AIT tape library with one 50-GB tape drives, 20 slots, tabletop, LVD	175195-B21
	AIT tape library with two 50-GB tape drives, 20 slots, tabletop, LVD	175195-B22
	AIT tape library with one 50-GB tape drives, 20 slots, rackmount, LVD	175196-B21
	AIT tape library with two 50-GB tape drives, 20 slots, rackmount, LVD	175196-B22
	AIT autoloader, 35 GB, 8 cartridge, tabletop, LVD, U.S.	292355-001
	Same as above, International	292355-B31
	AIT autoloader, 35 GB, 8 cartridge, rackmount, LVD, U.S.	280349-001
	Same as above, International	280349-B31
DAT Tape Drives	DAT 12/24-GB 4 mm narrow single-ended tabletop SCSI tape drive with 120V North American power cord; requires 3X-KZPEA-DB, 3X-KZPCA-AA, 3X-DEPVZ-AA LVD adapters	DS-TLZ10-DB
	DAT 20/40-GB hot plug DDS4 tape drive uses two slots in BA610-6D or 43xx shelves	3R-A2780-AA
	DAT 20/40-GB DDS4 tape drive, tabletop, carbon black, North America	157770-002
	DAT 20/40-GB DDS4 tape drive, tabletop, carbon black, International	157770-B32
	DAT 20/40-GB DDS4 tape drive, tabletop, carbon black, Japan	157770-292
	DAT 20/40-GB autoloader, tabletop, North America	166505-001
	DAT 20/40-GB autoloader, tabletop, International	166505-B31
	DAT 20/40-GB autoloader, tabletop, Japan	166505-291

Options

Step 8 – Storage Devices – Optional *(continued)*

DLT/SDLT Tape Drives	DLT tabletop DLT8000 40/80-GB external tape drive; requires 3X-KZPCA-AA LVD adapter; *TruCluster*™ support restricted to non-shared buses only.	146197-B31
	DLT tabletop DLT8000 40/80-GB external tape drive; requires 3X-KZPCA-AA LVD adapter; TruCluster support restricted to non-shared buses; Japan only	146197-293
	DLT tabletop DLT4000 20/40-GB external tape drive; requires 3X-KZPCA-AA and SN-PBXKP-BA Wide to Narrow cable adapter	TZ88N-TA
	SDLT tabletop 110/220-GB external tape drive; requires 3X-KZPCA-AA LVD adapter – U.S.	192103-002
	Same as above – Japan	192103-292
	Same as above – International	192103-B32
	SDLT tabletop 160/320-GB external tape drive; requires 3X-KZPCA-AA LVD adapter – U.S.	257319-001
	Same as above – International	257319-B31
	Same as above – Japan	257319-291
DLT/SDLT Tape Libraries	MSL5026DLX or MSL5026SL, DLT/SDLT tabletop library, 0 drives; all MSL5026 libraries are supported with 3X-DEPVZ-AA and 3X-KZPCA-AA adapters	231838-B21
	MSL5026DLX, DLT tabletop library with one 40/80-GB DLT tape drive, LVD	231821-B21
	MSL5026DLX, DLT tabletop library with two 40/80-GB DLT tape drives, LVD	231821-B22
	MSL5026DLX or MSL5026SL, DLT/SDLT rackmount library, 0 drives; requires rackmount kit (254795-001)	231979-B21
	MSL5026DLX, DLT rackmount library with one 40/80-GB DLT tape drive, LVD; requires rackmount kit (254795-001)	231891-B21
	MSL5026DLX, DLT rackmount library with two 40/80-GB DLT tape drives, LVD; requires rackmount kit (254795-001)	231891-B22
	MSL5026SL, SDLT tabletop library with one 110/220-GB SDLT tape drive, LVD	231822-B21
	MSL5026SL, SDLT tabletop library with two 110/220-GB SDLT tape drives, LVD	231822-B22
	MSL5026SL, SDLT rackmount library with one 110/220-GB SDLT tape drive, LVD; requires rackmount kit (254795-001)	231892-B21
	MSL5026SL, SDLT rackmount library with two 110/220-GB SDLT tape drives, LVD; requires rackmount kit (254795-001)	231892-B22
	Rackmount kit for MSL5000 series – for use with H9Axx M-Series cabinets	254795-001
	ESL9198SL SDLT tape library with four 110/220-GB SDLT tape drives, 198 slots; requires 3X-KZPCA-AA adapter	234618-B21
	ESL9198SL SDLT tape library with eight 110/220-GB SDLT tape drives, 198 slots; requires 3X-KZPCA-AA adapter	234618-B22
	ESL9326SL LVD with six SDLT 110/220-GB drives	234615-B21
	ESL9326SL LVD with eight SDLT 110/220-GB drives	234615-B22
	ESL9326SL LVD with 16 SDLT 110/220-GB drives	234615-B26
	ESL9595SL LVD with two SDLT 110/220-GB drives, 400 slots	274672-B22
	ESL9595SL LVD with 16 SDLT 110/220-GB drives, 400 slots	274672-B28
	ESL9595SL LVD with two SDLT 110/220-GB drives, 500 slots	281627-B22
	ESL9595SL LVD with 16 SDLT 110/220-GB drives, 500 slots	281627-B28
	ESL9595SL LVD with two SDLT 110/220-GB drives, 595 slots	281628-B22
	ESL9595SL LVD with 16 SDLT 110/220-GB drives, 595 slots	281628-B28

Options

Step 8 – Storage Devices – Optional *(continued)*

Rackmount Tape Drive Enclosures 3U– SDLT/DLT/AIT/DAT 5U– SDLT/DLT	Rackmount Kit for H9Axx Series Cabinets for 3U enclosure	3R-A3804-AA
	3U LVD Rackmount Enclosure, 0 drives, carbon black	274338-B21
	3U LVD Rackmount Enclosure, SDLT 110/220-GB, dual-drive, carbon black	274334-B21
	3U LVD Rackmount Enclosure, DLT 40/80-GB, dual-drive, carbon black	274335-B21
	3U LVD Rackmount Enclosure, SDLT 110/220-GB, carbon black	274331-B21
	3U LVD Rackmount Enclosure, DLT 40/80-GB, carbon black	274332-B21
	3U LVD Rackmount Enclosure, AIT 50-GB, carbon black	274333-B21
	5U Tape Array III Rackmount Enclosure, 0 drives, carbon black	274339-B21
	Rackmount Kit for Tape Array III, carbon black, (5U)	254795-001
	SDLT 110/220-GB Tape Array III, 5U rackmount kit, carbon black	274336-B21
	DLT 40/80-GB Tape Array III, 5U rackmount kit, carbon black	274337-B21
Internal Drives for Tape Enclosures	SDLT 110/220-GB tape drive, carbon black	192106-B25
	SDLT 160/320-GB tape drive, carbon black	257319-B21
	DLT 40/80-GB tape drive, carbon black	146196-B22
	AIT 35/70-GB tape drive, carbon black	216884-B21
	AIT 50/100-GB tape drive, carbon black	157766-B22
	DAT 20/40-GB (DDS4) tape drive, carbon black	157769-B22
Modular Data Routers	The following Modular Data Routers are supported with MSL5000 and ESL9000 tape libraries:	
	One Fibre channel x 2 HVD Data Router, 3R-A2673-AA	218240-B21
	One Fibre channel x 2 LVD Data Router, 3R-A2774-AA	218241-B21
	Two Fibre channel x 4 HVD Data Router, 3R-A3292-AA	163082-B21
	Two Fibre channel x 4 LVD Data Router, 3R-A3312-AA	163083-B21
	Two Fibre channel x 4 HVD FC-to-SCSI Data Router, Tru64 UNIX (3R-A3741-AA)	262654-B21
	Two Fibre channel x 4 LVD FC- to-SCSI Data Router, Tru64 UNIX (3R-A3740-AA)	262653-B21
External Storage Solutions/Controllers	Enterprise Virtual Array Model 2C6D 60-Hz, 42U opal storage cabinet, M3220 controller assembly with dual HSV110 controllers, six M5214 dual FC loop 14-bay drive enclosures	234345-B21
	Enterprise Virtual Array Model 2C6D 50-Hz, 42U opal storage cabinet, M3220 controller assembly with dual HSV110 controllers, six M5214 dual FC loop 14-bay drive enclosures	234345-B22
	Enterprise Virtual Array Model 2C12D 60-Hz, includes 42U opal storage cabinet, M3220 controller assembly with dual HSV110 controllers, 12 M5214 dual FC loop 14-bay drive enclosures	234346-B21
	Enterprise Virtual Array Model 2C12D 50-Hz, includes 42U opal storage cabinet, M3220 controller assembly with dual HSV110 controllers, 12 M5214 dual FC loop 14-bay drive enclosures	234346-B22
	Enterprise Virtual Array Model 8C8D 60-Hz, includes 42U opal storage cabinet, four M3220 controller assembly with eight HSV110 controllers, eight M5214 dual FC loop 14-bay drive enclosures	239782-001
	Enterprise Virtual Array Model 8C8D 50-Hz, includes 42U opal storage cabinet, four M3220 controller assembly, with eight HSV110 controllers, eight M5214 dual FC loop 14-bay drive enclosures	249977-B21
	Fibre Channel Controller (HSG80), includes 256-MB cache	DS-HSG80-BJ
	Model 2200 Controller Shelf for HSG80 Controller (DS-SE2ZS-C8)	135820-B21

Options

Step 8 – Storage Devices – Optional *(continued)*

Fibre Channel Disk Drives	36-GB 10K rpm dual-port 2-Gb/sec FC-AL 1-inch (25.4 mm) drive	238590-B21
	72-GB 10K rpm dual-port 2-Gb/sec FC-AL 1-inch (25.4 mm) drive	238921-B21
Fibre Channel Switches	Fibre Channel 1-GB SAN switch – 8-port	158222-B21 (U.S./Canada orders)
		DS-DSGGB-AA (Other country orders)
	Fibre Channel 1-GB SAN switch – 8-EL, integrated GBICs	176219-B21 (U.S./Canada orders)
		DS-DSGGC-AA (Other country orders)
	Fibre Channel 2-GB SAN switch – 16-port; requires Tru64 UNIX V5.1A Patch Kit: T64V51AB01AS0001-20020116.tar	287055-B21 (U.S./Canada orders)
		DS-DSGGD-BA (Other country orders)
	Fibre Channel Director Class 1-GB switch – 64-ports (for OpenVMS only)	DS-DMGGD-AA

RA8000, ESA12000 Ultra and RA8000, ESA12000 Fibre Channel Storage Arrays

- RAID Array 8000 and ESA 12000 (HSZ80) storage arrays are supported on DS25 systems
- RAID Array 8000 Fibre Channel and ESA 12000 Fibre Channel (HSG80) storage arrays are supported on DS25 systems
- For ordering information see: http://www.compaq.com/products/storageworks/raidstoragesystems.html
  NOTE: This website is available in English only.

Step 9 – Storage Adapters/Controllers

NOTE: Refer to the following chart when configuring adapters, shelves, and disks.

DS25 Configuration Chart for Storage Adapters

Adapter		Shelf	Disk Drive	Tru64 UNIX	OpenVMS
3X-KZPCA-AA		DS-SL13R-xx BA610-6D	3R-A0xxx-AA 1-inch Universal 3R-A1xxx-AA 1-inch Universal 3R-A3xxx-AA 1-inchUniversal	V5.1A	V7.3-1
3.3/5V	33 MHz				
3X-KZPEA-DB		DS-SL13R-Bx BA610-6D	3R-A0xxx-AA 1-inch Universal 3R-A1xxx-AA 1-inchUniversal 3R-A3xxx-AA 1-inchUniversal	V5.1A	V7.3-1
3.3/5V	66 MHz				
3X-KZPBA-CC		External HSZ80	DS-RZ1xx-VW	V5.1A	V7.3-1
5V	33 MHz				
DS-KGPSA-DA		External HSG80 HSV110	DS-RZ1xx-VW	V5.1A	V7.3-1
3.3/5V	33 MHz				
RAID Controller					
3X-KZPCC-AC/CE 3.3/5V 33 MHz		BA610-6D DS-SL13R-xx	3R-A0xxx-AA 1-inch Universal 3R-A1xxx-AA 1-inch Universal 3R-A3xxx-AA 1-inch Universal	V5.1A	-

Options

Step 9 – Storage Adapters/Controllers *(continued)*

	Maximum # Supported		
	Tru64 UNIX	**OpenVMS**	
PCI Fibre Channel adapter (DS-KGPSA-DA), (uses one slot)	4	4	DS-KGPSA-DA (26329-B21)
Fibre Channel cable (BNGBX-xx) xx=02, 05, 15, 30, 50 metres x=1, 2, 3, 4, 5			234457-B2x
PCI 2-port Ultra3 (LVD2) SCSI adapter, 64-bit/66 MHz dual-channel (uses one PCI slot); includes external 68-pin VHDCI connector; HSZxx RAID controllers not supported. No support for shared SCSI – no support for Model 4314R or 4314T single-bus shelves with 3X-KZPEA-DB adapter	4	4	3X-KZPEA-DB
PCI 1-port Ultra2 (LVD) SCSI adapter, 32-bit, single-channel (uses one PCI slot); includes external 68-pin HD connector; requires BN38C-xx cable to connect adapter to Ultra2 shelf; HSZxx RAID controllers not supported.	4	4	3X-KZPCA-AA
68-pin HD male-to-VHDCI male UltraSCSI cable; xx = 02, 03, 05, 10, 20, 25 metre			BN38C-xx
PCI 1-port UltraSCSI differential adapter (uses one PCI slot); includes external 68-pin HD connector, requires BN38C-xx cable (2 to 25 metre) to connect adapter to differential UltraSCSI shelf or RAID controller	4	4	3X-KZPBA-CC
68-pin HD male-to-VHDCI male UltraSCSI cable; xx = 02, 03, 05, 10, 20, 25 metre			BN38C-xx
PCI 1-port PCI to Ultra2, 64-bit, LVD backplane RAID controller with 16-MB cache (uses one PCI slot); requires connection to DS-SL13R-xx (maximum 14 disks with single channel) – requires graphics adapter to run console utilities (SMOR) -- Must be configured in slots 1-5	3	-	DS-KZPCC-AC
PCI 3-port PCI to Ultra2, 64-bit, LVD backplane RAID controller with 64-MB cache (uses one PCI slot); requires connection to DS-SL13R-xx (maximum 14 disks with single channel) – requires graphics adapter to run console utilities (SMOR) -- Must be configured in slots 1-5	3	-	DS-KZPCC-CE

Step 10 – M-series Cabinets – Optional

M-series enclosures require selection of the following items:

- H9A10 or H9A15 cabinet
- Rack kit for each system
- H9A10 or H9A15 rear cabinet extender
- Cabinet front door based on cabinet height
- Factory integration
- Ballast kit if one or two systems are ordered for the H9A15 cabinet
- Two Power cords for each system

NOTE: For more information on M-Series Cabinet Enclosures, see http://www.compaq.com/alphaserver/products/m-series/specs.html

Options

Step 10 – M-series Cabinets – Optional *(continued)*

Cabinet Configuration Chart for AlphaServer DS25 (5U) with DS-SL13R (3U) StorageWorks Shelves

Cabinet	Rack Kit	Cabinet Height/Space	Systems	DS-SL13R Shelves	Ballast Kit
H9A10-ME/MF	3X-BA57R-RA	56-inches/33U	1	8	-
			2	7	-
			3	5	-
			4	4	-
			5	2	-
			6	0	-
H9A15-ME/MF	3X-BA57R-RA	68.25-inches/40U	1	8	1
			2	7	1
			3	7	-
			4	6	-
			5	4	-
			6	2	-

NOTE: H9A1x-ME includes one H7602-EB PDU; H9A1x-MF includes one H7602-DB PDU -- Order additional PDUs if more are required.
- Single Input - H7600-DB/EB, 240V, 12 outlets
- Dual Input - H7602-DB/EB, 240V, 16 outlets

Cabinet Configuration Chart for AlphaServer DS25 (5U) with StorageWorks RA3000 and Disk Shelves (12U)

- 12U of vertical cabinet space is reserved for one RA3000 controller shelf and up to five disk shelves mounted in top of cabinet, front to back; an additional 2U of vertical space is required for RA3000 controller shelf UPS.
- Disk shelves can be a combination of RA3000 DS-SWXRA-GN disk shelves and StorageWorks BA36R-RC/RD disk shelves.
- RA3000 controller shelf supports a maximum of four DS-SWXRA-GN disk shelves; third and fourth DS-SWXRA-GN disk shelf ordered will be installed in rear of M-series cabinet; rear mounted shelves require that a 2-metre SCSI cable (BN37A-02) be ordered separately.
- Systems are supported in remaining vertical space.

Cabinet	Mounting Kit	Cabinet Height/Space	Systems	RA3000 + Shelves	Ballast Kit
H9A10-ME/MF	3X-BA57R-RA	56-inches/33U	1	1 + 5	-
			2	1 + 5	-
			3	1 + 5	-
H9A15-ME/MF	3X-BA57R-RA	68.25-inches/40U	1	1 + 5	1
			2	1 + 5	1
			3	1 + 5	-
			4	1 + 5	-

M-series Cabinets	67-inch carbon black cabinet with 56-inch or 33U of usable vertical space, 200 to 240V dual-16A controller, 16 IEC C13 outlets, two input power plug NEMA L620P, Americas, Asia Pacific; includes rear door.	H9A10-ME
	67-inch carbon black cabinet with 56-inch or 33U of usable vertical space, 240V dual-16A controller, 16 IEC C13 outlets, two input power plug IEC 309, 20A, Europe; includes rear door.	H9A10-MF
	79-inch carbon black cabinet with 68.25-inch or 40U of usable vertical space, 200 to 240V dual-16A controller, 16 IEC C13 outlets, two input power plug NEMA L620P, Americas, Asia Pacific; includes rear door.	H9A15-ME
	79-inch carbon black cabinet with 68.25-inch or 40U of usable vertical space, 240V dual-16A controller, 16 IEC C13 outlets, two input power plug IEC 309, 20A, Europe; includes rear door.	H9A15-MF

Options

Step 10 – M-series Cabinets – Optional *(continued)*

Rear Cabinet Extender – Requires selection of one cabinet extender for each H9A10 or H9A15 cabinet	Rear cabinet extender, carbon black, for H9A10-ME/MF cabinets	H9C10-ZE
	Rear cabinet extender, carbon black, for H9A15-ME/MF cabinets	H9C15-ZE
Cabinet Front Door – Requires selection of door based on cabinet height	Front door for H9A10-ME/MF cabinet enclosure	H9C10-ZF
	Front door for H9A15-ME/MF cabinet enclosure	H9C15-ZF
Factory Integration – Required	Factory Integration of systems and storage devices assembled and configured in cabinet enclosure in predefined locations	YS-ASCAA-AA

Ballast Kit – Required only if one system is ordered for the H9A15 cabinet

- Ballast is added to a cabinet at particular locations for specific configurations to meet safety regulations for installation, operation, and service; see Cabinet Configuration Chart

	Two 35-40 lb steel plates	H9C10-MC
Rackmount Power Cords – Two required for each system, three if optional FR-H7910-AA power supply is installed	Rackmount power cord	BN35S-4E
Shelves Supported in M-series Cabinets – Optional	StorageWorks Model 4314R Ultra3 SCSI (LVD) single-bus Universal drive rackmount shelf, includes one power supply. No support for Model 4314R single-bus shelves with embedded Ultra3SCSI adapter or 3X-KZPEA-DB adapter	DS-SL13R-AA (All regions except Japan)
	StorageWorks Model 4314R Ultra3 SCSI (LVD) single-bus Universal drive rackmount shelf, includes one power supply. No support for Model 4314R single-bus shelves with embedded Ultra3SCSI adapter or 3X-KZPEA-DB adapter	190209-291 (U.S./Canada orders for Japan variant)
	StorageWorks Model 4314R Ultra3 SCSI (LVD) single-bus Universal drive rackmount shelf, includes one power supply. No support for Model 4314R single-bus shelves with embedded Ultra3SCSI adapter or 3X-KZPEA-DB adapter	DS-SL13R-AJ (Non U.S./Canada orders for Japan variant)
	StorageWorks Model 4354R Ultra3 SCSI (LVD) split-bus Universal drive rackmount shelf, includes two redundant power supplies, U.S.	DS-SL13R-BA (All regions except Japan)
	StorageWorks Model 4354R Ultra3 SCSI (LVD) split-bus Universal drive rackmount shelf, includes two redundant power supplies, Japan	190211-291 (U.S./Canada orders for Japan variant)
	StorageWorks Model 4354R Ultra3 SCSI (LVD) split-bus Universal drive rackmount shelf, includes two redundant power supplies, Japan	DS-SL13R-BJ (Non U.S./Canada orders for Japan variant)

CustomSystems Support

- Cabinets containing systems and storage must be assembled by qualified assemblers: Compaq Manufacturing
- For custom integration of systems

Options

Step 11 – Graphics Adapters – Optional

- RAID Configuration Utility is accessible via console port for Tru64 UNIX and OpenVMS systems; optional graphics capability available
- Select graphics adapter, monitor, and country-specific keyboard if required

	Maximum # Supported		
	Tru64 UNIX	**OpenVMS**	
3Dlabs Oxygen VX1 32-MB PCI 2D graphics accelerator – can operate in all slots in combination with 3X-KZPCA-AA, 3X-KZPEA-DB, or DS-KGPSA-xx controllers. **NOTE**: Only VX1 cards may be used in a multi-head environment.	4	4	SN-PBXGF-AB
PowerStorm 300 3D multi-head graphics accelerator with 15-MB frame buffer memory and 16-MB texture memory. Must be installed in PCI slot 5.	1	1	SN-PBXGD-AD
PowerStorm 350 3D multi-head graphics accelerator with 30-MB frame buffer memory and 32-MB texture memory. Must be installed in PCI slot 5.	1	1	SN-PBXGD-AE
PCI combo adapter	-	1	3X-DEPVZ-AA

Step 12 – Networks and Communications – Optional

	Maximum # Supported		
	Tru64 UNIX	**OpenVMS**	
PCI to dual-port 10/100 UTP Fast Ethernet adapter	2	2	3X-DE602-BB
Cable for 10BaseT Twisted Pair connection			BN25G-xx
Shielded cable for 10BaseT Twisted Pair connection			BN25M-xx
Dual-port 10/100 UTP daughter card for 3X-DE602-BB (3X-DE602-BB is a prerequisite)	2	2	3X-DE602-TA
FE FX daughter card for 3X-DE602-BB (3X-DE602-BB is a prerequisite)	2	2	3X-DE602-FA
PCI Gigabit Ethernet adapter, SC connectors, MMF, no boot support	2	1	DEGPA-SA
SC-to-SC dual fiber optic cable			BN34B-xx
PCI Gigabit Ethernet adapter, UTP, no boot support	2		DEGPA-TA
PCI FDDI adapter, single attachment station (SAS), multi-mode fiber (MMF), SC connector	2	2	3X-DEFPA-AC
PCI FDDI adapter, DAS, MMF, SC connector	2	2	3X-DEFPA-DC
MIC-SC dual fiber optic cable			BN34D-xx
SC-to-SC dual fiber optic cable			BN34B-xx
PCI FDDI adapter, SAS, TP-PMD, requires BN25H-03 cable	2	2	3X-DEFPA-UC
PCI FDDI dual adapter, DAS, TP-PMD, requires BN25H-03 cable	2	2	3X-DEFPA-MC
3-metre (9.8-inch) FDDI cross-over cable			BN25H-03
PCI 4-port asynchronous controller	4	2	PBXDA-AA
PCI 8-port asynchronous controller, cable included	4	2	PBXDA-AB
PCI 16-port asynchronous controller, cable included	4	2	PBXDA-AC

Options

Step 12 – Networks and Communications – Optional *(continued)*

(continued)	Maximum # Supported		
	Tru64 UNIX	**OpenVMS**	
PCI 2-port intelligent synchronous controller; the WANDD Kit version for Tru64 UNIX is V3.2-1: http://ftp1.support.compaq.com/public/unix/v5.1a/wanosf/3.2/wanosf_v32-1.README	4	4	3X-PBXDD-AA
PCI 4-port intelligent synchronous controller; the WANDD Kit version for Tru64 UNIX is V3.2-1: http://ftp1.support.compaq.com/public/unix/v5.1a/wanosf/3.2/wanosf_v32-1.README	4	4	3X-PBXDD-AB
PCI-to-ATM 155 Mb adapter – Fiber	4	4	3X-DAPBA-FA
PCI-to-ATM 155 Mb adapter – UTP	4	4	3X-DAPBA-UA
PCI-to-ATM 622 Mb adapter – Fiber	2	2	3X-DAPCA-FA

Step 13 – MEMORY CHANNEL – Optional

Tru64 UNIX Systems (V5.1A)

NOTE: MEMORY CHANNEL with virtual hubs not currently supported on AlphaServer DS25 systems. The MEMORY CHANNEL controller, CCMAB-AA, must be revision C1 or later.

- Each system node in the cluster requires a TruCluster software license (QL-6BRAC-AA) or TruCluster Plus Software Package (QP-6R9AC-AA)

OpenVMS Systems

- OpenVMS V7.3-1 and OpenVMS Cluster license (QL-MUZAC-AA) are required

Configuring Information

- One PCI-to-System Area Network adapter (CCMAB-AA) is supported in a single system.
- For two to eight system nodes, order one CCMHB-AA hub; order one CCMAB-AA adapter and one BN39B-04 or BN39B-10 cable for each system node; make connections from the CCMAB-AA in each system to the CCMHB
- CCMHB-AA includes four CCMLB-AA line cards and supports up to four nodes; expansion up to eight system nodes can be achieved by adding up to four CCMLB-AA line cards.

MEMORY CHANNEL Controller/ System Area Network Hub	PCI-to-System Area Network Controller, maximum one -- 5V/33 MHz. (Must be installed in PCI slot 5)	CCMAB-AA
	System Area Network Hub with four line cards; includes BN19P-2E power cord for Canada, Japan, and U.S. – for other regions, order appropriate power cord from the following list:	CCMHB-AA
	Hub expansion box with no line cards	CCMHB-BA
	Expansion line card for CCMHB hub	CCMLB-AA
	1-metre cable for CCMAB and CCMHB	BN39B-01
	4-metre cable for CCMAB and CCMHB	BN39B-04
	10-metre cable for CCMAB and CCMHB	BN39B-10

Options

Step 13 – MEMORY CHANNEL – Optional *(continued)*

MEMORY CHANNEL Power Cords	Australia, New Zealand	103541-011 (U.S./Canada orders)
		BN19H-2E (Other country orders)
	Central Europe	BN19C-2E
	Denmark	103541-481 (U.S./Canada orders)
		BN19K-2E (Other country orders)
	Egypt, India	103541-AR1 (U.S./Canada orders)
		BN19S-2E (Other country orders)
	Ireland, United Kingdom	BN19A-2E
	Israel	BN18L-2E
	Italy	103541-461 (U.S./Canada orders)
		BN35M-02 (Other country orders)
	Switzerland	103541-511 (U.S./Canada orders)
		BN19E-2E (Other country orders)

Step 14 – Monitors – Optional

- Graphics monitors other than those listed can be used if compatible with SVGA graphics ordered with system.
- At least one video cable, 1.8-metre length, is included with all variants of monitors.
- Video extension cable required if monitor is located more than 1.5-metre from system.

Carbon/Silver Monitors	P720 17-inch (16-inch viewable image size) auto-scanning colour monitor, Diamondtron NF, 0.25mm aperture grille pitch, VGA to 1280 x 1024 @85 Hz, MPRII/TCO 99/Energy Star Compliant, Northern Hemisphere with NA power cord, VGA cable	3R-A3388-AA 244373-001
	Same as above, with Euro-power cord	3R-A3389-AA 244373-021
	Same as above, APD, no power cord	3R-A3390-AA 244373-B24
	Same as above, PRC with power cord, CCIB	3R-A3391-AA 244373-AA1
	Same as above, Southern Hemisphere, with Australia/New Zealand power cord	3R-A3392-AA 244373-011

Options

Step 14 – Monitors – Optional *(continued)*

Carbon/Silver Monitors *(continued)*	P920 19-inch (18-inch viewable image size) auto-scanning colour monitor, Diamondtron NF, 0.24mm aperture grille pitch, VGA to 1600 x 1200 @85 Hz, MPRII/TCO 99/Energy Star Compliant, Northern Hemisphere with NA power cord, VGA cable	3R-A3393-AA 244375-001
	Same as above, with Euro power cord	3R-A3394-AA 244375-021
	Same as above, PRC with power cord, CCIB	3R-A3396-AA 244375-AA1
	Same as above, Southern Hemisphere, 0.25 to 0.27 mm aperture grille pitch, with Australia/New Zealand power cord	3R-A3397-AA 244375-011
	P1220 22-inch (20-inch viewable image size) auto-scanning colour monitor, Diamondtron NF, 0.24mm aperture grille pitch, VGA to 1792 x 1344 @85Hz, dual video input, USB Hub, MPRII/TCO 99/Energy Star Compliant, Northern Hemisphere with NA power cord, VGA cable	3R-A3398-AA 244374-001
	Same as above, with Euro power cord	3R-A3399-AA 244374-021
	Same as above, APD, no power cord	3R-A3400-AA 244374-B24
	Same as above, PRC with power cord, CCIB	3R-A3401-AA 244374-AA1
	Same as above, Southern Hemisphere, with Australia/New Zealand power cord	3R-A3402-AA 244374-011
Carbon/Silver Flat Panel Monitors	TFT8030, 18.1-inch (18-inch viewable image size) TFT flat panel monitor, 0.28 mm pixel pitch, 1280 x 1024 @75 Hz, multi-mode support, MPRII/TCO99/Energy Star compliant, six video input connectors (two VGA, two DVI-I, one S-video, and one C-video), NA power cord, VGA and DVI-I cables	3R-A3511-AA 234362-001
	TFT5030, 15.1-inch (15-inch viewable image size) TFT flat panel monitor, 0.30 mm pixel pitch, 1024 x 768 @75 Hz, multi-mode support, MPRII/TCO99/Energy Star compliant, two video input connectors (one VGA and one DVI-I), NA power cord, VGA and DVI-I cables	3R-A3353-AA 228134-001
Video Extension Cable	6-foot/1.8-metre video extension cable	BN39C-02

Options

Step 14 – Monitors – Optional *(continued)*

Monitor Power Cords	North America	BN26J-1K
	Australia, New Zealand, 2.5-metre	103541-011 (U.S./Canada orders)
		BN19H-2E (Other country orders)
	Central Europe, 2.5-metre	BN19C-2E
	Denmark, 2.5-metre	103541-481 (U.S./Canada orders)
		BN19K-2E (Other country orders)
	Egypt, India, South Africa, 2.5-metre	103541-AR1 (U.S./Canada orders)
		BN19S-2E (Other country orders)
	Israel, 2.5-metre	BN18L-2E
	Italy, 2.5-metre	103541-461 (U.S./Canada orders)
		BN35M-02 (Other country orders)
	Japan, 2.5-metre, Dentori approved	3X-BN46F-02
	Switzerland, 2.5-metre	103541-511 (U.S./Canada orders)
		(BN19E-2E (Other country orders)
	UK, Ireland, 2.5-metre	BN19A-2E

Options

Step 15 – Keyboards, Mouse, and Documentation - Optional

Step 15a – Keyboards and Mouse

- Order country-specific keyboard or mouse only if required
- All keyboards listed may not be available in all geographies
- Select an opal OpenVMS keyboard and opal mouse for use with VT5xx text terminals.

	Opal	Carbon	
Keyboard/Language	**OpenVMS**	**Tru64 UNIX**	**OpenVMS**
U.S./English keyboard	LK461-A2	3R-LKQ48-AA	3X-LK462-A2
Arabic keyboard	-	3R-LKQ48-BR	-
Belgian keyboard	LK461-AB	3R-LKQ48-AB	3X-LK462-AB
BHCSY keyboard	-	3R-LKQ48-AX	-
Canadian/English keyboard	LK461-AQ	-	3X-LK462-AQ
Canadian/French keyboard	LK461-AC	3R-LKQ48-AC	3X-LK462-AC
Cyrillic keyboard (Russian)	LK461-BT	3R-LKQ48-BT	3X-LK462-BT
Czech keyboard	LK461-BV	3R-LKQ48-BV	3X-LK462-BV
Danish keyboard	LK461-AD	3R-LKQ48-AD	3X-LK462-AD
Dutch keyboard	LK461-AH	3R-LKQ48-AH	3X-LK462-AH
Finnish keyboard	LK461-AF	3R-LKQ48-AF	3X-LK462-AF
French keyboard	LK461-AP	3R-LKQ48-AP	3X-LK462-AP
German keyboard	LK461-AG	3R-LKQ48-AG	3X-LK462-AG
Greek keyboard	LK461-BH	3R-LKQ48-BH	3X-LK462-BH
Hebrew keyboard	LK461-AT	3R-LKQ48-AT	3X-LK462-AT
Hungarian keyboard	LK461-BQ	3R-LKQ48-BQ	3X-LK462-BQ
International keyboard	-	3R-LKQ48-BA	-
Italian keyboard	LK461-AI	3R-LKQ48-AI	3X-LK462-AI
Japanese keyboard	-	3R-LKQ48-AJ	-
Korean keyboard	-	3R-LKQ48-BK	-
Latin-American keyboard	-	3R-LKQ48-AR	-
Norwegian keyboard	LK461-AN	3R-LKQ48-AN	3X-LK462-AN
Polish keyboard	LK461-BP	3R-LKQ48-BP	3X-LK462-BP
Portuguese keyboard	LK461-AV	3R-LKQ48-AV	3X-LK462-AV
Romanian keyboard	LK461-BL	-	3X-LK462-BL
Simplified Chinese keyboard	-	3R-LKQ48-CV	-
Slovak keyboard	LK461-CZ	3R-LKQ48-CZ	3X-LK462-CZ
Spanish keyboard	LK461-AS	3R-LKQ48-AS	3X-LK462-AS
Swedish keyboard	LK461-AM	3R-LKQ48-AM	3X-LK462-AM
Swiss/French keyboard	LK461-AK	3R-LKQ48-AK	3X-LK462-AK
Swiss/German keyboard	LK461-AL	-	3X-LK462-AL
Traditional Chinese keyboard	-	3R-LKQ48-BI	-
Thai keyboard	-	3R-LKQ48-CB	-
Turkish keyboard	LK461-BU	3R-LKQ48-BU	3X-LK462-BU
Turkish/French keyboard	LK461-BW	-	3X-LK462-BW
UK keyboard	-	3R-LKQ48-AE	-
Yugoslavian keyboard	LK461-BY	-	3X-LK462-BY

Options

Step 15 – Keyboards, Power Cords, Documentation *(continued)*

Step 15b – Mouse

	3-button mouse – opal	SN-PBQWS-WA
	3-button mouse – carbon	3R-A3480-AA
Keyboard or Mouse Extension Cable	6-foot keyboard or mouse extension cable; to extend both keyboard and mouse order two cables	3X-BC34A-06

Step 16 – Console Terminal – Optional

- Any terminal can be used as a console device
- Third-party console devices require an EIA-232 25-pin DSUB connector

VT510 video terminal; requires keyboard, H8575-x adapter, and BC16E-x cable	VT510-xx
Console cable, female connector (25-pin passive adapter)	H8575-A
Console cable, male connector (adapter with EOS, ESD, 25 POS D-SUB)	H8575-D

Step 17 – Software – Required selection of media and documentation for first system on site

- Software Processor Code = E

Tru64 UNIX

- AlphaServer DS25 Tru64 UNIX systems include Unlimited User license, Server Extension license, Internet Express, and iPlanet Web Server – Enterprise Edition 4.0
- AlphaStation DS25 Tru64 UNIX systems include Base 2-user license and Open3D license

Tru64 UNIX media and online documentation on CD-ROM	QA-6ADAA-H8
Tru64 UNIX full hard copy documentation	QA-6ADAA-GZ
Tru64 UNIX Unlimited User license	QL-MT7AE-AA
Internet Express for Tru64 UNIX	QB-3NCAA-SA
TruCluster Plus Software Package, licenses for TruCluster Server, Logical Storage Manager and AdvFS Ultilities	QP-6R9AC-AA
Advanced Server for Tru64 UNIX, 25 client concurrent use license	QL-5U29M-3D
Advanced Server for Tru64 UNIX, 50 client concurrent use license	QL-5U29M-3E
Advanced Server for Tru64 UNIX, 100 client concurrent use license	QL-5U29M-3F
Advanced Server for Tru64 UNIX, 250 client concurrent use license	QL-5U29M-3G
Advanced Server for Tru64 UNIX, 500 client concurrent use license	QL-5U29M-3H
Layered products media and documentation for Tru64 UNIX on CD-ROM	QA-054AA-H8
DECnet/OSI end-system license for Tru64 UNIX	QL-MTJAE-AA
DECnet/OSI extended function license for Tru64 UNIX	QL-MTKAE-AA

Step 17 – Software – Required selection of media and documentation for first system on site *(continued)*

OpenVMS

- AlphaServer DS25 OpenVMS systems include Base license with System Manager license and Enterprise Integration Server Package for OpenVMS Revision V3.1
- AlphaStation DS25 OpenVMS systems include Base license, Concurrent Use 1-user license, NAS 150 Client license, and Open3D license
- Enterprise Integration Package includes licenses for TCP/IP Services for OpenVMS, DECwindows Motif for OpenVMS Alpha, DECprint Supervisor for OpenVMS Open, DECnet-Plus for OpenVMS Alpha End System, Archive/Backup System for OpenVMS Management Tools, Archive/Backup Agent for Windows NT, Office Server for OpenVMS, PATHWORKS 32, PATHWORKS V6 for OpenVMS – Advanced Server, and Compaq Office Server Client Access License

OpenVMS media and online documentation on CD-ROM	QA-MT1AA-H8
OpenVMS hard copy documentation	QA-001AA-GZ
Layered products media and documentation for OpenVMS on CD-ROM	QA-03XAA-H8

- OpenVMS Concurrent Use licenses provide the right to interactively use the operating system by the specified number of concurrent users on a designated OpenVMS system. OpenVMS Concurrent Use licenses can be moved from one system to another at user discretion and can be shared in a mixed OpenVMS VAX and OpenVMS Alpha cluster.
- OpenVMS Traditional Unlimited Use license is system specific and can only be used on one single system at a time. It cannot be shared between systems or in an OpenVMS VAX or OpenVMS Alpha Cluster.

Concurrent Use 1-user license	QL-MT3AA-3B
Concurrent Use 2-user license	QL-MT3AA-3C
Concurrent Use 4-user license	QL-MT3AA-3D
Concurrent Use 8-user license	QL-MT3AA-3E
Concurrent Use 16-user license	QL-MT3AA-3F
Concurrent Use 32-user license	QL-MT3AA-3G
Concurrent Use 64-user license	QL-MT3AA-3H
Concurrent Use 128-user license	QL-MT3AA-3J
Concurrent Use 256-user license	QL-MT3AA-3K
OpenVMS Cluster license for Alpha systems	QL-MUZAC-AA
OpenVMS Cluster Client license for Alpha systems	QL-3MRAC-AA
OpenVMS Cluster Client to Full VMS Cluster Migration license	QL-6J7AC-AA
DIGITAL Enterprise Integration Server for OpenVMS media and documentation	QA-5LVAA-H8
DECnet extended function license for OpenVMS	QL-MTGAE-AA
DECnet end-system to extended function upgrade license for OpenVMS	QL-MTHAE-AA
OpenVMS Volume Shadowing license	QL-2A1AE-AA

Options

Step 18 – Hardware and Software Support Services

- Select one of the optional *CarePaq*™ Priority Service Packages described below that best supports the customer's operational requirements for system availability.

CarePaq Priority Services	•	CarePaq Priority Services are available for AlphaServer/AlphaStation systems running Tru64 UNIX or OpenVMS operating systems. Priority Services are designed for the growing number of customers who need support beyond the basic warranty. Five packages are offered - Priority, Priority Silver, Priority Gold, and Priority Executive with coverage for both Principal servers/stations and SSPs (Subsequent System Packages) – that meet a full range of customer support requirements.

Program Features – Principal Server

Priority	•	9 x 5 HW/SW support
	•	4-hour response on-site hardware support
	•	2-hour response for Bronze software support
	•	License Subscription for Compaq O/S software and embedded L/P (i.e., EIS for OpenVMS, unlimited users, and server extensions for Tru64 UNIX)
	•	Condist update distribution for OpenVMS or Tru64 UNIX and their layered products. (Layered products not included on Condist can be ordered separately.)
Priority Silver	•	24 x 7 HW Support with Named Engineer, 4-hour response
	•	24 x 7 Silver SW Support - Named Account Rep, 1-hour response Monday – Friday, 8AM-5PM local time; 2-hour response remaining hours
	•	License Subscription for Compaq O/S software and embedded L/P (i.e., EIS for OpenVMS, unlimited users, and server extensions for Tru64 UNIX)
	•	Condist update distribution for OpenVMS or Tru64 UNIX and their layered products. (Layered products not included on Condist can be ordered separately.)
	•	Technical newsletter and SW activity review
	•	Proactive Patch Notification
	•	One (1) System Healthcheck per year
Priority Gold	•	24 x 7 HW support with Named Engineer, 4-hour response for on-site support
	•	24 x 7 Gold SW support - Named Account Rep
	•	30-minute callback (critical); 1-hour callback (non-critical)
	•	License Subscription for Compaq O/S software and embedded L/P (i.e., EIS for OpenVMS, unlimited users, and server extensions for Tru64 UNIX)
	•	Condist update distribution for OpenVMS or Tru64 UNIX and their layered products. (Layered products not included on Condist can be ordered separately.)
	•	Technical newsletter, SW activity review and 10 hours Upgrade impact planning
	•	Proactive Revision Management
	•	Two (2) System Healthchecks per year
	•	Mandatory pre-qualification required

Options

Step 18 – Hardware and Software Support Services *(continued)*

Priority Gold Executive

- 24 x 7 HW support with Named Engineer, two-hour response for on-site support
- 24 x 7 Gold SW support - Named Account Rep
- 30-minute callback (critical); one-hour callback (non-critical)
- License Subscription for Compaq O/S software and embedded L/P (i.e., EIS for OpenVMS, unlimited users, and server extensions for Tru64 UNIX)
- Software update distribution on CD-ROM: OpenVMS or Tru64 UNIX and their layered products (Layered products not included on Condist can be ordered separately.)
- Technical newsletter, SW activity review and 10 hours Upgrade impact planning
- Proactive Revision Management
- Two (2) System Healthchecks per year
- Customer site must be within 25 miles of a Compaq service location
- Mandatory pre-qualification required

Program Features – Additional Services

SSPs (Subsequent System Packages)

- For Priority, Priority Silver, Priority Gold, and Priority Gold Executive
- HW Support at same level as corresponding package for Principal server/station
- License Subscription: Compaq O/S (where applicable)
- Telephone support through Principal server/station covered by full support package

Installation

- Preinstallation review
- Unpacking of equipment
- Assemble and test
- Basic product usage info
- No software installation added

Installation & Startup Compaq O/S

- Preinstallation review
- Unpacking of equipment
- Assemble and test
- Basic product usage info
- Install operating systems
- Product configuration
- Print and network access
- Orientation

Model/CarePaq Priority Service	Principal Server/Station 1 year	Principal Server/Station 3 years	Subsequent Systems 1 year	Subsequent Systems 3 years
AlphaServer/AlphaStation DS25				
Priority	FM-A01NE-12	FM -A01NE-36	FM -A21NE-12	FM -A21NE-36
Priority Silver	FM-A04NE-12	FM -A04NE-36	FM -A24NE-12	FM -A24NE-36
Priority Gold	FM -A08NE-12	FM -A08NE-36	FM -A28NE-12	FM -A28NE-36
Priority Gold Exec.	FM -A09NE-12	FM -A09NE-36	FM -A29NE-12	FM -A29NE-36
Installation	FM -AINST-NE	FM -AINST-NE	FM -AINST-NE	FM -AINST-NE
Installation & Startup	FM -ASTAR-NE	FM -ASTAR-NE	FM -ASTAR-NE	FM -ASTAR-NE

NOTES:

- AlphaServer/AlphaStation DS25 systems include one-year parts and labor warranty with 5 x 9 on-site Next Business Day response.
- Priority Services include support for new Compaq branded hardware options internal to the AlphaServer/AlphaStation enclosure plus a monitor (17-inch or less excluding flat panel models).
- External storage devices/cabinets carry their own level of warranty and should be quoted separately for uplifted warranty services.
- Five years CarePaq Priority Service is available upon request. To quote five-year service, change the last two part number digits from 12 or 36 to 60.
- In addition to the CarePaq Priority Services, uplifted warranty Supplemental Services are available for separate hardware and software support. For more information on Hardware and Software Supplemental Services and other Compaq service options available for AlphaServers and AlphaStations, consult your Sales Account Manager or visit
  English: http://www.compaq.ca/english/service/services.htm
  French: http://www.compaq.ca/Francais/service/servicesf.htm

NOTE: Certain restrictions and exclusions may apply. For details, consult the Product Information Centre at 1-888-882-6672.

Technical Specifications

Pedestal	**Dimensions** (H x W x D)	18.5 x 8.85 x 27.5 in/47.0 x 22.5 x 69.9 cm		
	Shipping Dimensions	24 x 26.25 x 40 in/61.0 x 66.0 x 101.6 cm		
	Weight	Typical Configuration	80 lb/36 kg	
		Maximum Configuration	88 lb/40 kg	
	Shipping Weight	Nominal	100 lb/45 kg	
		Maximum	110 lb/50 kg	
	Clearances	**Operating**	**Service**	
	Front	15 in/ 38.1 cm	15 in/ 38.1 cm	
	Rear	6 in/15 cm	29.5 in/75 cm	
	Left Side	None	None	
	Right Side	None	None	
Rackmount	**Dimensions** (H x W x D)	8.75 x 17.5 x 26 in/22.2 x 44.5 x 66.0 cm (5U)		
	Shipping Dimensions	24 x 26.25 x 40 in/61.0 x 66.0 x 101.6 cm		
	Weight	When lifting	Nominal	80 lb/36 kg
			Maximum	86 lb/39 kg
		Total added to cabinet (brackets, slides, cables):	Nominal	84 lb/38 kg
			Maximum	88 lb/40 kg
	Shipping Weight	Nominal	100 lb/45 kg	
		Maximum	110 lb/50 kg	
	Clearances	**Operating**	**Service**	
		See specific cabinet requirements	Minimum 4 ft/121.9 cm, 28 in/71 cm withdrawal on rails	
Cabinet		**H9A10 M-Series**	**H9A15 M-Series**	
	Dimensions (H x W x D)	67 x 23.6 x 43.27 in/ 170 x 60 x 110 cm	79 x 23.6 x 35.4 in/ 200 x 60 x 90 cm	
	Shipping Dimensions	73 x 36 x 48 in/ 185.5 x 91.5 x 122 cm	85 x 36 x 48 in/ 216 x 91.5 x 122 cm	
	Weight	Configuration dependent	Configuration dependent	
	Shipping Weight	Nominal: 946 lb/430 kg	Nominal: 1,056 lb/550 kg	
		Maximum: 1,375 lb/625 kg	Maximum: 1,408 lb/640 kg	

Technical Specifications

System Unit

ENVIRONMENTAL

Temperature	Operating (Tower, Rackmount)	50° to 95° F/10° to 35° C
	Non-operating	41° to 122° F/ 5° to 50° C
	Storage (60 days)	–40° to 151° F/–40 to 66° C
	Rate of change	20°F/hr/11°C/hr
	NOTE: Maximum operating temperature at sea level; reduce by 1.8°F (1°C) for each 600m (2,000 ft) above sea level.	
Humidity	Operating	20% to 90%, non-condensing
	Non-operating	10% to 90%, non-condensing
	Storage (60 days)	10% to 95%
Maximum Wet Bulb Temperature	Operating	82° F/28° C
	Non-operating	90° F/32° C
	Storage (60 days)	115° F/46° C
Heat Dissipation	Nominal	Maximum
Tower	550W, 1,878 BTU/hr	780W, 2,664 BTU/hr
H9A10/H9A15 Cabinets	Configuration dependent	
Air Flow and Quality	Intake location	Front
	Exhaust location	Rear Tower, Pedestal, Rack; Rear/top H9A10/H9A15
	Particle size	N/A
	Concentration	N/A
Altitude (unpressurized)	Operating	10,000 f/3,037m
	Non-operating	40,000 ft/12,192m
	NOTE: Higher altitudes are possible if maximum operating temperature is reduced (see Temperature); other restrictions may apply such as maximum permissible altitude for hard drives.	

ACOUSTICS (Declared values per ISO 9296 and ISO 7779)

Acoustics	L_{WAd},B	L_{pAm}, dBA (bystander positions)
Idle	6.3	45
Operating	6.4	46
	NOTE: Current values for specific configurations are available from Compaq, note that 1 B = 10 dBA.	
Vibration	Operating	10-500 Hz 0.1 G peak
Shock	Operating	10G 11ms half-sine (pedestal) 5G 11ms half-sine (rack)

Technical Specifications

System Unit *(continued)*

ELECTRICAL (Power supplies are universal, PFC, auto ranging, 100/240 VAC)

Nominal Voltage (VAC)	100	120	200 to 240
Voltage Range (VAC) (temporary condition)	90 to 100	110 to 128	180-250
Power Source Phase	Single	Single	Single
Nominal Frequency (Hz)	50/60	50/60	50/60
Frequency Range (Hz)	49 to 51/59 to 61	49 to 51/59 to 61	49 to 51/59 to 61

RMS Current

Pedestal and Rackmount	Single power cord	7.5A	6.0A	3.8A
	Maximum VA	780	765	730
M-Series Cabinet (configuration dependent)	Nominal voltage (VAC)	100	120	220-240
	Each power cord	24A	24A	16A

Power Cords

Pedestal	1 (75 in/190 cm)	IEC 320 C13 to NEMA 5-15 (North America) or IEC 320 C13 to country-specific
Rackmount	1 (14 ft 10 in/452 cm)	IEC 320 C13 to NEMA 5-15 (North America) or IEC 320 C13 to IEC 320 C14 (other countries)
Cabinet	2 (10 ft 10 in/330 cm)	120V non-removable NEMA L5-30P or 200-240V non-removable IEC 309
Regulatory	Agency Approvals	UL: Listed to UL1950 (3rd edition)
		CSA: Certified to CAN/CSA-C22.2 No. 950-M95
		TUV: EN 60950/A11: 1997 VDE 0805 GS marked
		FCC: Part 15.B Class B
		CE: EN55022, EN50024, EN61000-3-2, EN61000-3-3
		VCCI V-3/97.04 Class B ITE
		BSMI: CNS13438
		C-Tick: AS/NZS 3548 (1995)
	Reviewed to	AS/NZ 3260:1993 Australian/New Zealand Standard
		EN 60950/A11: 1997 European Norm
		IEC 950 (2nd edition, 4th amend)

© 2002 Compaq Canada Corp. (an HP company). All rights reserved. Compaq, the Compaq logo, AlphaServer, AlphaStation, Compaq Insight Manager, OpenVMS, StorageWorks, CarePaq, Tru64, and TruCluster are trademarks of Compaq Information Technologies Group, L.P. in the U.S. and/or other countries. UNIX is a registered trademark or trademark of The Open Group in the U.S. and/or other countries. All other product names mentioned herein may be trademarks of their respective companies. Printed in Canada.

Compaq shall not be liable for technical or editorial errors or omissions contained herein. The information is provided "as is" without warranty of any kind and is subject to change without notice. The warranties for Compaq products are set forth in the express limited warranty statements accompanying such products. Nothing herein should be construed as constituting an additional warranty.