hp AlphaServer DS15

H9Axx Rackmount Installation Guide

Order Number: EK-D15H9-RM. B01

This Guide is for service providers and self-maintenance customers who are installing an AlphaServer DS15 system into the M-series cabinet.

Hewlett-Packard Company

September 2003

© 2003 Hewlett-Packard Company.

Linux is a registered trademark of Linus Torvalds in several countries. UNIX is a trademark of The Open Group in the United States and other countries. All other product names mentioned herein may be trademarks of their respective companies.

HP shall not be liable for technical or editorial errors or omissions contained herein. The information in this document is provided “as is” without warranty of any kind and is subject to change without notice. The warranties for HP products are set forth in the express limited warranty statements accompanying such products. Nothing herein should be construed as constituting an additional warranty.

FCC Notice

Part 15 of the Federal Communications Commission (FCC) Rules and Regulations has established Radio Frequency (RF) emission limits to provide an interference-free radio frequency spectrum. Many electronic devices, including computers, generate RF energy incidental to their intended function and are, therefore, covered by these rules. These rules place computers and related peripheral devices into two classes, A and B, depending upon their intended installation. Class A devices are those that may reasonably be expected to be installed in a business or commercial environment. Class B devices are those that may reasonably be expected to be installed in a residential environment (i.e., personal computers). The FCC requires devices in both classes to bear a label indicating the interference potential of the device as well as additional operating instructions for the user.

FCC Rating Label

The rating label on the device shows which class (A or B) of the equipment. Class B devices have an FCC ID on the label. Class A devices do not have an FCC ID on the label. After you determined the class of the device, refer to the following corresponding statement.

Class A Equipment

This equipment has been tested and found to comply with the limits for a Class A digital device, pursuant to Part 15 of the FCC rules. These limits are designed to provide reasonable protection against harmful interference when the equipment is operated in a commercial environment. This equipment generates, uses, and can radiate radio frequency energy and, if not installed and used in accordance with the instructions, may cause harmful interference to radio communications. Operation of this equipment in a residential area is likely to cause harmful interference, in which case the user will be required to correct the interference at personal expense.

Class B Equipment

This equipment has been tested and found to comply with the limits for a Class B digital device, pursuant to Part 15 of the FCC Rules. These limits are designed to provide reasonable protection against harmful interference in a residential installation. This equipment generates, uses, and can radiate radio frequency energy and, if not installed and used in accordance with the instructions, may cause harmful interference to radio communications. However, there is no guarantee that interference will not occur in a particular installation. If this equipment does cause harmful interference to radio or television reception, which can be determined by turning the equipment off and on, the user is encouraged to try to correct the interference by one or more of the following measures:

- Reorient or relocate the receiving antenna.
- Increase the separation between the equipment and receiver.
- Connect the equipment into an outlet on a circuit different from that to which the receiver is connected.
- Consult the dealer or an experienced radio or television technician for help.

Declaration of Conformity for products marked with the FCC logo – United States only

This device complies with Part 15 of the FCC rules. Operation is subject to the following two conditions: (1) This device may not cause harmful interference, and (2) this device must accept any interference received, including interference that may cause undesired operation.
For questions regarding your product, contact:

- Hewlett-Packard Company
  P.O. Box 692000, Mail Stop 530113
  Houston, Texas 77269-2000
- 1-800-652-6672 (For continuous quality improvement, calls may be recorded or monitored.)

For questions regarding this FCC declaration, contact us by mail or telephone:

- Hewlett-Packard Company
  P.O. Box 692000, Mail Stop 530113
  Houston, Texas 77269-2000
- 1-281-514-3333

Modifications

The FCC requires the user to be notified that any changes or modifications made to this device that are not expressly approved by Hewlett-Packard Company may void the user's authority to operate the equipment.

Cables

Connections to this device must be made with shielded cables with metallic RFI/EMI connector hoods in order to maintain compliance with FCC rules and regulations.

Mouse Compliance Statement

This device complies with Part 15 of the FCC Rules. Operation is subject to the following two conditions: (1) this device may not cause harmful interference, and (2) this device must accept any interference received, including interference that may cause undesired operation.

Canadian Notice (Avis Canadien)

Class A Equipment

This Class A digital apparatus meets all requirements of the Canadian Interference-Causing Equipment Regulations.

Cet appareil numérique de la classe A respecte toutes les exigences du Règlement sur le matériel brouilleur du Canada.

Class B Equipment

This Class B digital apparatus meets all requirements of the Canadian Interference-Causing Equipment Regulations.

Cet appareil numérique de la classe B respecte toutes les exigences du Règlement sur le matériel brouilleur du Canada.

European Union Notice

Products with the CE marking comply with the EMC Directive (89/336/EEC) and the Low Voltage Directive (73/23/EEC) issued by the Commission of the European Community and if this product has telecommunication functionality, the R&TTE Directive (1999/5/EC).

Compliance with these directives implies conformity to the following European Norms (in parentheses are the equivalent international standards and regulations):

- EN55022 (CISPR 22) – Electromagnetic Interference
- EN55024 (IEC61000-4-2, 3, 4, 5, 6, 8, 11) – Electromagnetic Immunity
- EN61000-3-2 (IEC61000-3-2) – Power Line Harmonics
- EN61000-3-3 (IEC61000-3-3) – Power Line Flicker
- EN60950 (IEC60950) – Product Safety

Taiwanese Notice

警告使用者:

這是甲類的資訊產品，在居住的環境中使用時，可能會造成射頻干擾，在這種情況下，使用者會被要求採取某些適當的對策。

Japanese Notice

この装置は，情報処理等電波障害自主規制協議会（VCCI）基準に基づくクラス A 情報装置です。この装置を家庭環境で使用すると電波障害を引き起こすことがあります。この場合には，使用者が適切な対策を講じるよう要求されることがあります。

Contents

Preface ix

Chapter 1 Rackmount Installation

1.1 Overview 1-1
1.2 Rackmount Guidelines 1-1
1.3 Unpack Rackmount Box 1-2
1.4 Determine Base Zero 1-2
1.5 Mark and Prepare the Rack Rails 1-3
1.6 Install the Rack Rails 1-5
1.7 Attach the Rackmount Ears 1-6
1.8 Insert and Secure the System 1-7
1.9 Check Power and Secure Cables 1-9
1.10 For More Information 1-11

Index

Figures

Figure 1-1 Unpacking the Rackmount Kit 1-2
Figure 1-2 Using the Template 1-3
Figure 1-3 Marking Inner Rails 1-4
Figure 1-4 Installing the Rails 1-5
Figure 1-5 Attaching the Rackmount Ears 1-6
Figure 1-6 Inserting the System 1-7
Figure 1-7 Aligning the System on the Rails 1-8
Figure 1-8 Securing Power 1-10

Tables

Table 1 HP AlphaServer DS15 Documentation ix

Preface

Intended Audience

This manual is for service providers and self maintenance customers of the *HP AlphaServer* DS15 systems.

Document Structure

This manual uses a structured documentation design. Topics are organized into small sections, usually consisting of two facing pages. Most topics begin with an abstract that provides an overview of the section, followed by an illustration or example. The facing page contains descriptions, procedures, and syntax definitions.

This manual has 1 chapter.

- **Chapter 1, Rackmount Installation**, Instructions for installing the DS15 *AlphaServer* into a rack system.

Documentation Titles

Table 1 HP AlphaServer DS15 Documentation

Title	Order Number
hp AlphaServer DS15 and AlphaStation DS15 Owner's Guide	EK–DS150–OG
hp AlphaServer DS15 and AlphaStation DS15 Service Guide	EK–DS150–SG
hp AlphaServer DS15 Series H9Axx Rackmount PDU Installation Guide	EK–D15H9–PD
hp AlphaServer DS15 H9Axx Rackmount Template	EK–D15H9–RT

Information on the Internet

Visit the *AlphaServer* Web site at http://h18002.www1.hp.com/alphaserver/ for service tools and more information about the *AlphaServer* DS15 system.

Chapter 1
Rackmount Installation

1.1 Overview

- Rackmount Guidelines
- Unpack Rackmount Box
- Determine Base Zero
- Mark and Prepare the Rack Rails
- Install the Rack Rails
- Attach the Rackmount Ears
- Insert and Secure the Unit
- Check Power and Secure Cables
- For More Information

WARNING: To prevent injury, access is limited to persons who have appropriate technical training and experience. Such persons are expected to understand the hazards of working within this equipment and take measures to minimize danger to themselves or others.

1.2 Rackmount Guidelines

The hp *AlphaServer* DS15 is a three U unit and the PDU used is one U in size. This allows for a maximum of 13 systems for the H9A15 cabinet and 11 systems for the H9A10 cabinet.

1.3 Unpack Rackmount Box

The rackmount box is one of three long boxes found in the unit's shipping carton (see Figure 1-1). It contains these instructions, two rails, screws, u-nuts and screws, template, power cord bracket, and two rackmount ears for securing the system.

Figure 1-1 Unpacking the Rackmount Kit

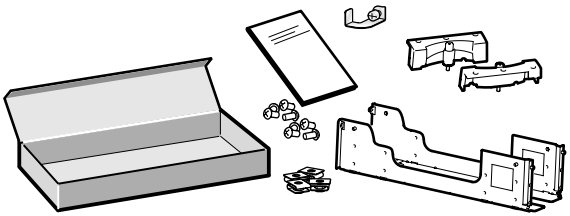

PK1038A

1.4 Determine Base Zero

Decide the relative position of the AlphaServer DS15 in the rack. Base zero is where the bottom of the unit will be when installed in the rack.

If your system is the first system in the rack, then install right above the PDU.

If you are adding your system to a rack already populated, then base zero is the top of the system underneath the system to be installed. This system needs a clearance of 9 holes to accommodate the system height.

NOTE: *One U of space must be left on the bottom of the rack for a PDU. All population of rack systems must begin above this one U area."*

1.5 Mark and Prepare the Rack Rails

1. Using the template provided with the kit, mark holes 2 and 5 on an interior rail, and base zero (see Figure 1-2).

Figure 1-2 Using the Template

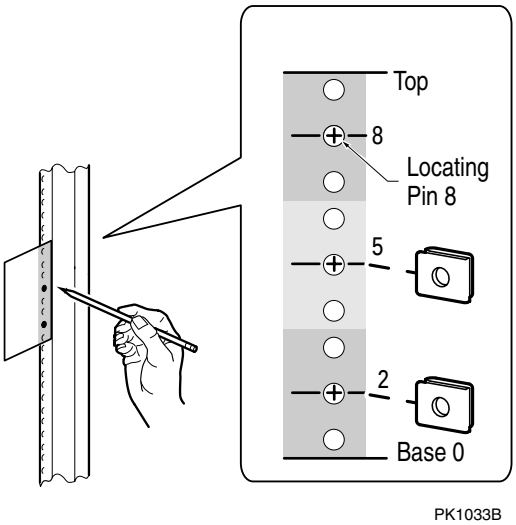

2. Mark all four of the inner rails (see Figure 1-3).
3. If you are installing more than one AlphaServer DS15 in the rack at the same time:
   - Using the template, mark the top of the first system you are installing. Use this as base zero for the second system.
   - Move the template up and mark holes 2 and 5, and the top of the system until you have marked holes for all of the systems you are installing.

Figure 1-3 Marking Inner Rails

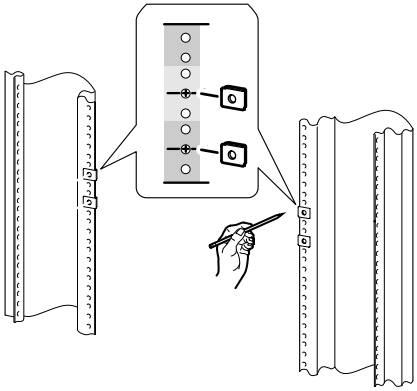

PK1033a-99

1.6 Install the Rack Rails

There are two threaded guide pins on the rails: one on the front of each rail, and one on each rear side. In case the holes in your rackmount cabinet require smaller guide pins, a second set of smaller pins has been included in the kit. Replace the pins if necessary.

1. Insert a u-nut at each hole shown in Figure 1-4. Four u-nuts for each inner rack rail and two for the front of each rail.
2. Insert the front guide pin, aligning the screw hole to the front u-nut. See Figure 1-4, ❶. Push the rail in.
3. Insert the rear guide pin into the side rail, aligning the screw holes to the rear u-nuts. Push the rail in toward the side of the rackmount cabinet (see ❷).
4. Secure with four screws. See ❸.

Figure 1-4 Installing the Rails

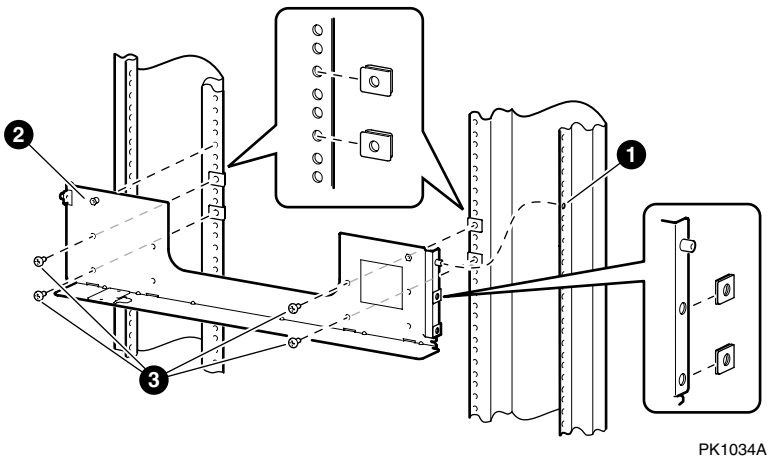

1.7 Attach the Rackmount Ears

1. Align the three vertical holes located on the front edge of the system with the three holes on the rackmount ears (see Figure 1-5).
2. Using a Phillips screwdriver, screw the ears onto the system. Do not apply excessive force.

Figure 1-5 Attaching the Rackmount Ears

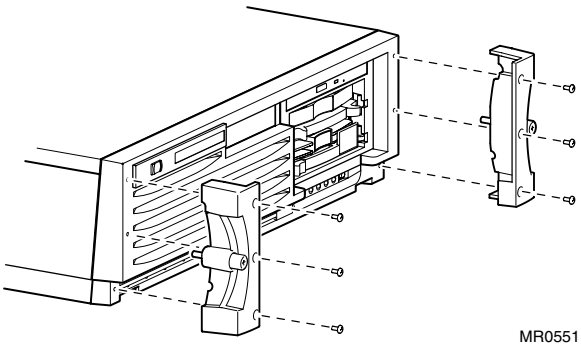

1.8 Insert and Secure the System

1. Using both hands, place the system onto the rails and push it back into the cabinet (see Figure 1-6).
2. Align the holes in the bulkhead with the prongs on the rails (see Figure 1-7).
3. Push the system back into the rack.
4. Secure the system by tightening the captive screws on the rackmount ears on the front of the system.

Figure 1-6 Inserting the System

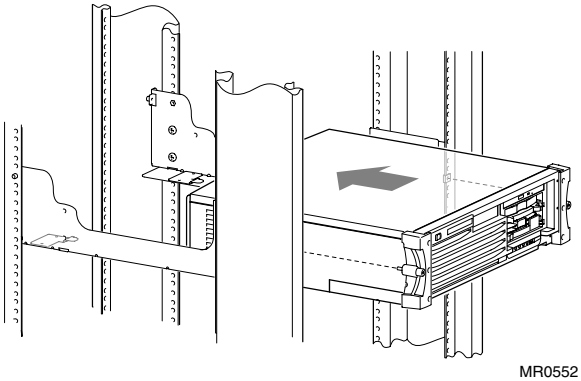

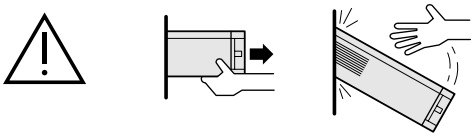

Caution: During removal, system box not tethered.
Attention: Pendant le déplacement, le boîtier système n'est pas fixé.
Precaución: Durante el traslado, no debe atarse la caja del sistema.
Achtung: Beim Entfernen ist das Systemgehäuse nicht gesichert.

PK1037-99

Figure 1-7 Aligning the System on the Rails

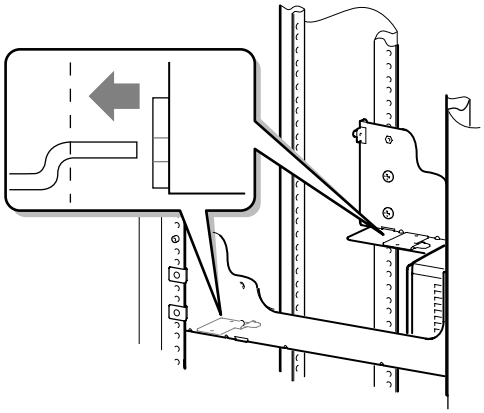

PK1042-99

1.9 Check Power and Secure Cables

1. Remove the thumbscrew ❶ (see Figure 1-8).
2. Attach the power cord bracket with attached screw ❷, turning it clockwise, but not tight.
3. Route the power cord over the back of the rail, into the rackmount cabinet side area.
4. Continue cabling. When all cabling is complete, connect power cord ❸ to the power controller unit.
5. To hold the power cord connector tightly in place, move the power cord bracket ❹ over the rear of the power cord connector and tighten the attached screw ❷.

Figure 1-8 Securing Power

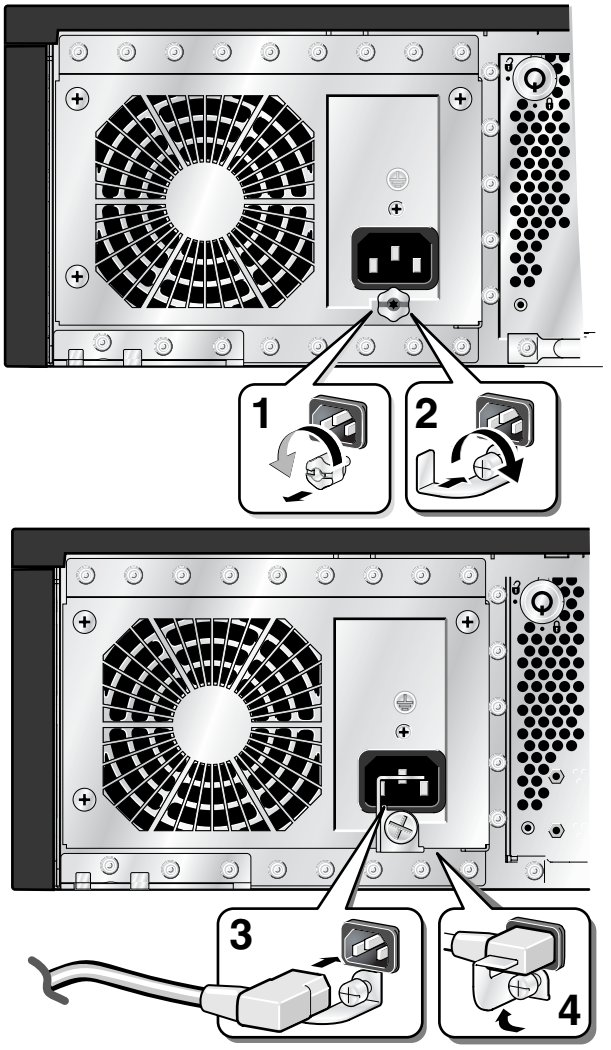

After securing the power cord with the safety latch, route the power cords over the rails and into the side of the cabinet.

1.10 For More Information

- *H9A10-M-Series Cabinet, Illustrated Parts Breakdown* (EK-H9A10-IP)
- *H9A15 M-Series Cabinet Illustrated Parts Breakdown* (EK-H9A15-IP)
- Printset *H9A10 M-Series Cabinet AlphaServer Systems Rack Mount Configurations* (B-IB-H9A10-5-DBM)
- Printset *H9A15 M-Series Cabinet AlphaServer Systems Rack Mount Configurations* (B-IB-H9A15-3-DB)

Using a Web browser, you can access additional documentation at http://h18003.www1.hp.com/alphaserver/