Overview

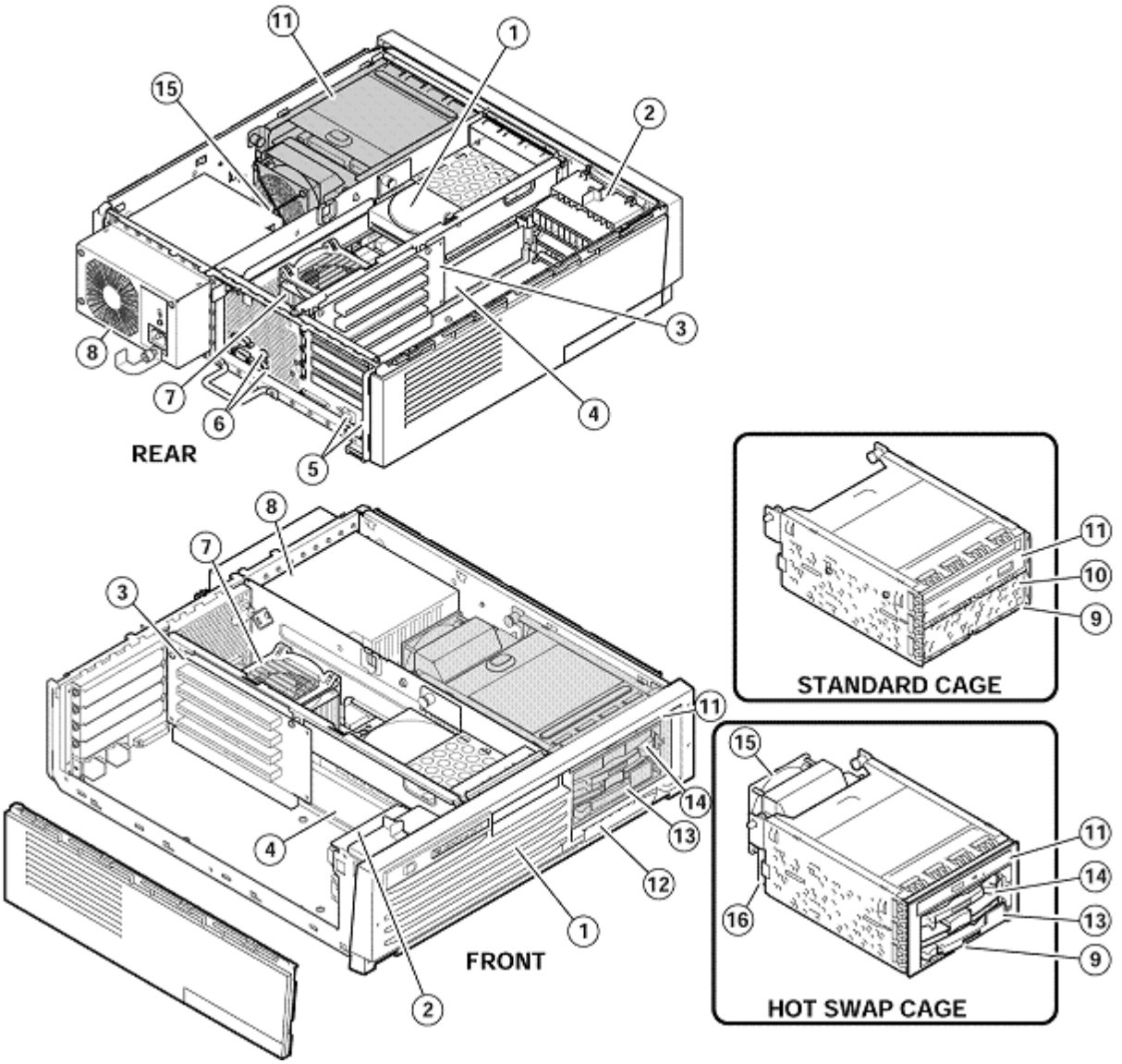

1. Concealed disk bay
2. Fan Assembly
3. PCI riser card
4. Memory
5. Dual Ethernet ports
6. Keyboard and mouse ports
7. CPU and fan
8. Power supply
9. System disk
10. Optional disk or tape bay
11. DVD/CD-RW
12. Control Panel
13. Front accessible disk
14. Optional front accessible disk
15. Disk Fan

At A Glance

AlphaServer/AlphaStation DS15A 3U Systems include:

- Alpha 1-GHz CPU with 2-MB onboard ECC cache
- 512-MB, 1-GB, or 2-GB SDRAM memory – expandable to 4-GB maximum memory capacity
- Onboard dual 10/100 BaseT Ethernet ports
- Four 64-bit PCI expansion slots
- Onboard Ultra160 SCSI controller

Choice of storage cage subsystems:

  - DS15A Internal Storage Cage
  - DS15A Front Access Storage Cage

- Maximum Internal storage capacity: Internal Storage Cage – 218.4-GB SCSI; Front Access Storage Cage – 745.6-GB SCSI
- Two serial ports: COM1 port is both an RMC port with modem control and a full-duplex asynchronous communications port; COM2 port is a full-duplex asynchronous communications port
- PS/2-style keyboard port and mouse port
- 400W (120/240V, 60/50 Hz) power supply
- U.S. English documentation
- Tru64 UNIX or OpenVMS Factory Installed Software
- Protected by HP Services, including one-year, on-site hardware with next business day response

NOTE: Keyboard, power cord, and mouse must be ordered separately.

Standard Features

Processor	Alpha 21264C 1-GHz processor	
Cache Memory	2-MB onboard cache	
Upgradability	Supports upgrades of memory and hard drives	
	Standard	One CPU
Memory	Standard	512 MB (one memory kit), 1 GB (one memory kit), or 2 GB (one memory kit) - Tru64 UNIX, OpenVMS
	Maximum	4 GB (two memory kits, each kit includes two industry-standard DIMMs with ECC support)
Network Controller	Onboard dual 10/100 BaseT Ethernet ports	
Expansion	Storage bays	Internal Storage Cage Systems: Four total – DVD/CD-RW and three storage bays: Three internal 3.5-inch x 1-inch hard disk drives **or** two internal 3.5-inch x 1-inch hard disk drives and one 5.25-inch x 1.6-inch removable media device Front Access Storage Cage Systems: Five Total – DVD/CD-RW and four Storage bays: Two front access 3.5-inch x 1-inch hard disk drives and two internal 3.5-inch x 1-inch hard disk drives) **or** one 5.25-inch x 1.6-inch removable media device and two internal 3.5-inch x 1-inch hard disk drives
	PCI slots	Four full-length 64-bit/33-MHz slots or two full length 64-bit/66-MHz slots
Storage	DVD/CD-RW	Internal Storage Cage Systems: 5.25-inch 48X half height DVD/CD-RW drive Front Access Storage Cage Systems: 24X slim-line DVD/CD-RW drive
	Hard Drives	72.8-GB Wide Ultra3 available with the Internal Storage Cage, and 36.4-GB, 72.8-GB, 146-GB, or 300-GB Universal SCSI drives available with Front Access Storage Cage
Storage Adapter/ Controller	Onboard Ultra160 dual port SCSI controller, one port for internal storage and one port for external storage, plus choice of optional storage adapters/controllers (see Step 9)	
Expansion Ports	SCSI	One Ultra160, 68-pin VHDCI connector
	Serial	Two ports, one serial port with full-duplex asynchronous modem control and one RMC dedicated serial port with full-duplex asynchronous modem control
	Keyboard	One PS/2-style port
	Mouse	One port
Power Supply	400W	

Standard Features

Manageability	Hewlett-Packard Insight Manager
Supported Options	A detailed summary of options supported on the AlphaServer/AlphaStation DS15A is available at http://h18002.www1.hp.com/alphaserver/options/asds15a/asds15a_options.html
OS Support	AlphaServer DS15A Tru64 UNIX systems include pre-installed software, Base license, Unlimited User license, Server Extension license, Internet Express and Hewlett-Packard Secure Web Server AlphaStation DS15A Tru64 UNIX systems include pre-installed software, 2-user Base license AlphaServer DS15A OpenVMS systems include pre-installed software, Base license with System Manager license and Enterprise Integration Server License Package for OpenVMS AlphaStation DS15A OpenVMS systems include pre-installed software (V7.3-2), Base license, Concurrent Use 1-user license, and NAS 150 Client license Minimum OS support: Tru64 UNIX V5.1A New Hardware Delivery-7 (NHD-7) or OpenVMS V7.3 -1 plus TIMA kit
Service and Support	Protected by HP Services, including a one-year, on-site hardware warranty with next business day response. Software warranty is a 90-day telephone advisory. Training, consulting, network integration, software support, comprehensive system maintenance and guaranteed uptime services are also available for customers requiring higher levels of service and support.

Step 1 – Select System

AlphaServer/AlphaStation DS15A 1-GHz systems require the **mandatory** selection of the following items:

- **Memory, one Storage Cage** (either Internal Storage Cage or Front Access Storage Cage) **and one system disk**
- Country-specific power cord
- Software media and documentation for first system on site
- Rackmount kit for rackmount systems (See Step 8 – Cabinet Enclosures)
- Minimum OS support: Tru64 UNIX V5.1A New Hardware Delivery-7 (NHD-7) or OpenVMS V7.3-1 plus TIMA kit

NOTE: Country-specific keyboard and mouse are recommended. See Step 13.

AlphaServer DS15A 1-GHz Base Systems							
OS	CPU	Memory	PCI	2-10/100t Ethernet Ports	Hard Drive	Storage Cage	Order Number
Tru64 UNIX	1 GHz	Mandatory	4	Onboard	Mandatory	Mandatory	DA-76CAA-AA
OpenVMS	1 GHz	Mandatory	4	Onboard	Mandatory	Mandatory	DY-76CAA-AA
AlphaStation DS15A 1-GHz Base Systems							
OS	CPU	Memory	PCI	2-10/100t Ports	Hard Drive	Storage Cage	Order Number
Tru64 UNIX	1 GHz	Mandatory	4	Onboard	Mandatory	Mandatory	DA-76CAA-AW
OpenVMS	1 GHz	Mandatory	4	Onboard	Mandatory	Mandatory	DY-76CAA-AW

Step 2 – Memory – Mandatory

- Maximum 4-GB memory
- Maximum two memory kits per system – each kit includes two industry-standard DIMMs with ECC support

512-MB memory kit, two 200-pin, 133-MHz, 256-MB DIMMs	3X-MS315-EA
1-GB memory kit, two 200-pin, 133-MHz, 512-MB DIMMs	3X-MS315-FA
2-GB memory kit, two 200-pin, 133-MHz, 1-GB DIMMs	3X-MS315-GA

Memory DIMMS

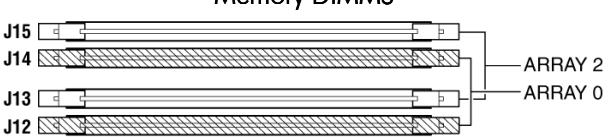

DIMM CONFIGURATION RULES:
-Array 0 must be populated first.
-Use the same two DIMMs within an ARRAY (size and vendor)

Step 3 – Select Storage Cage – Mandatory

- DS15A Systems support **one** Storage Cage
- Selection of one Storage Cage is **mandatory (no exceptions)**

- DS15A Internal Storage Cage: DS15A System with Internal Cage supports three storage devices: 3X-BA15A-AB
  - Either three internal hard disk drives or one 5.25-inch half height backup tape and two internal hard disk drives
- DS15A Front Access Storage Cage: DS15A System with Front Access Cage supports up to four storage devices: 3X-BA15B-AB
  - Two HP Universal disk drives plus two internal disk drives, or
  - One Front Access Universal Tape Drive (DAT) and two internal disk drives

Step 3a – Internal Storage Cage

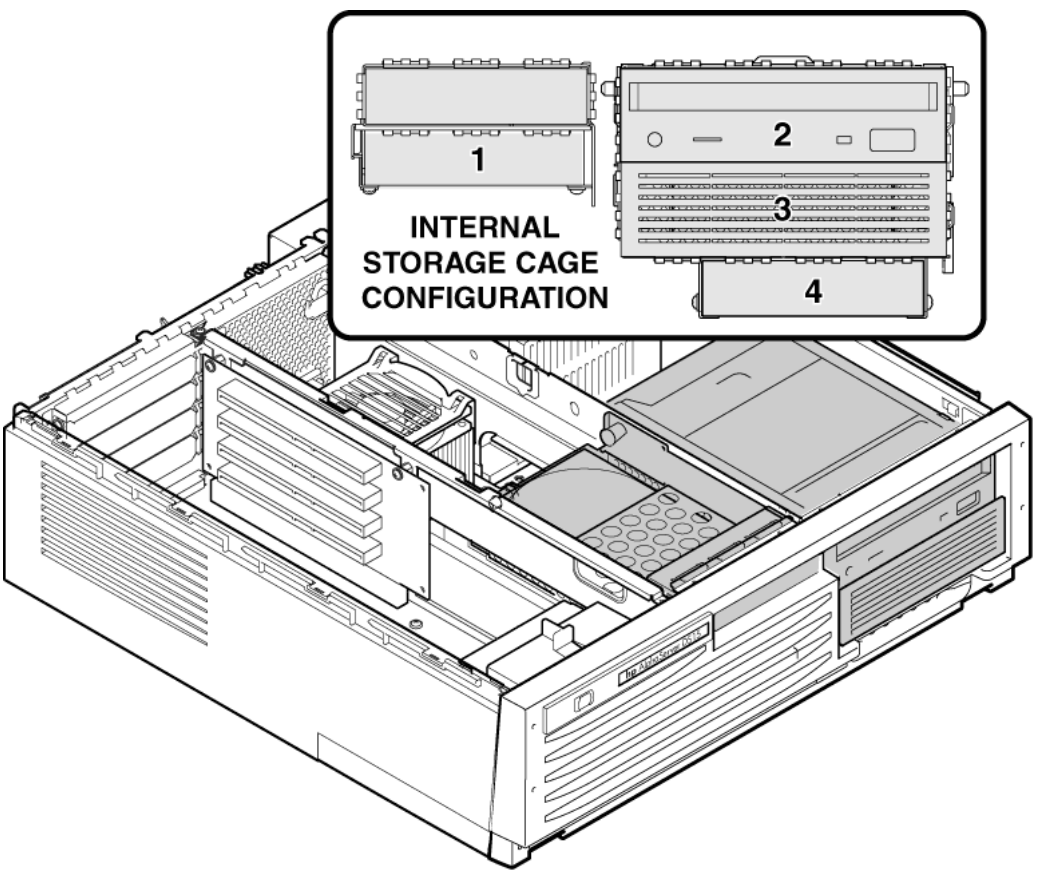

1. Internal drive bay
2. DVD/CD-RW
3. Internal drive bay
4. Internal drive bay

DS15A Storage Configuration Rules with Selection of Internal Storage Cage:

- DS15A Systems configured with the Internal Storage Cage include a half height DVD/CD-RW in dedicated drive slot
- DS15A Systems configured with the Internal Storage Cage have three available storage bays (one in the Storage cage plus two in the system box) that can be configured as follows:
  - Maximum of three internal disk drives (3.5-inch x 1-inch drives) or two internal disk drives (3.5-inch x 1-inch) and one 5.25-inch half height removable media device

Step 3b – Front Access Storage Cage

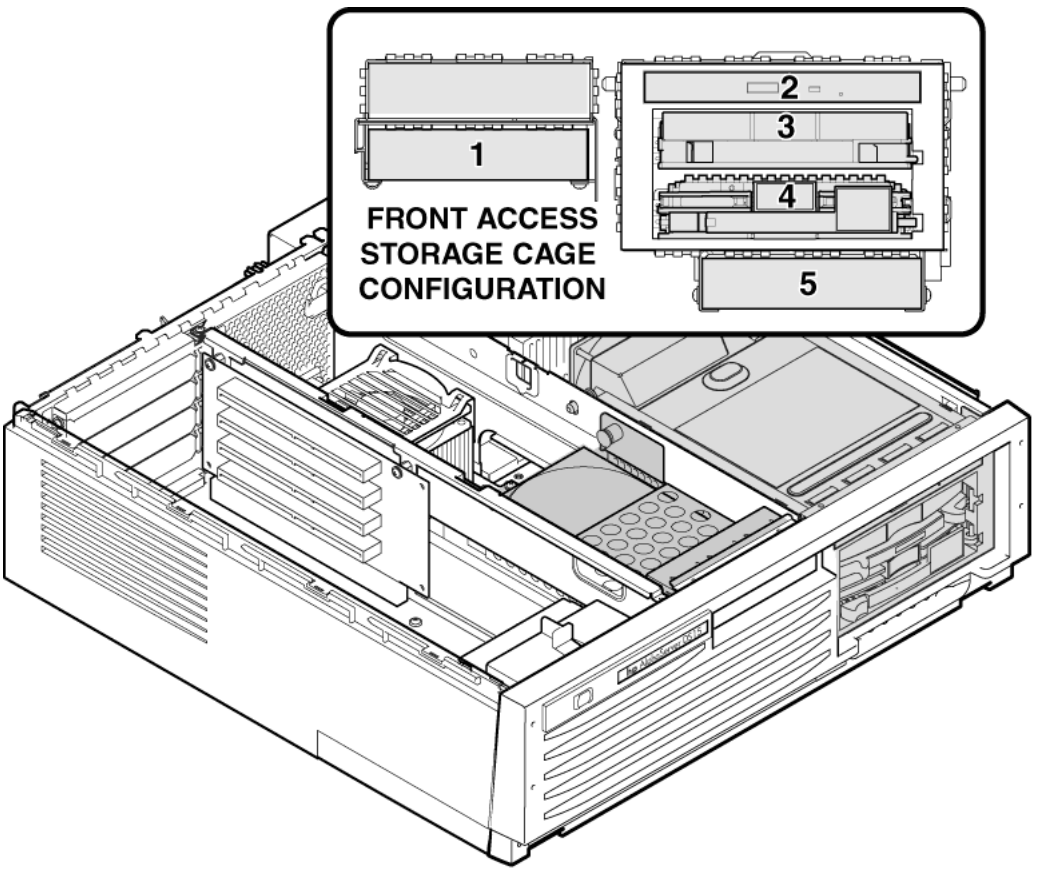

1. Internal drive bay
2. DVD/CD-RW
3. Front access drive bay
4. Front access drive bay
5. Internal drive bay

DS15A Storage Configuration Rules with Selection of Front Access Storage Cage:

- DS15A Systems configured with Front Access Storage Cage include a DVD/CD-RW slim-line in dedicated drive slot
- DS15A Systems configured with the Front Access Storage Cage include four storage bays (two HP Universal SCSI disk drives and two internal SCSI drives) which can be configured as follows:
    - Maximum of two internal disk drives (3.5-inch x 1-inch drives) and two HP Universal disk drives (3.5-inch x 1-inch) or one Front Access Universal tape drive (DAT) and two internal disk drives
    - SCSI cable with connections to the four disk drives is included with the Front Access Storage Cage

Step 4 – Mandatory Selection of Disk Drive

Internal SCSI Disk Drives (For Drives Internal to System Enclosure and Internal Storage Cage)	72.8-GB 10,000 rpm Ultra3 SCSI drive	DS-RZ3GA-WA
	72.8-GB 15,000 rpm Ultra3 SCSI drive	DS-RZ3GB-WA
Universal Disk Drives (For Front Access Storage Cage)	36.4-GB Ultra320 SCSI 15,000 rpm 1-inch Universal disk drive	3R-A3849-AA
	72.8-GB Ultra320 SCSI 10,000 rpm 1-inch Universal disk drive	3R-A3839-AA
	72.8-GB Ultra320 SCSI 15,000 rpm 1-inch Universal disk drive	3R-A3851-AA
	146-GB Ultra320 SCSI 10,000 rpm 1-inch Universal disk drive	3R-A3841-AA
	300-GB Ultra320 SCSI 15,000 rpm 1-inch Universal disk drive	3R-A6726-AA
	300-GB Ultra320 SCSI 10,000 rpm 1-inch Universal disk drive	3R-A4952-AA

Step 5 – Tape Drives – Optional

Internal Tape Drives (For Internal Storage Cage)	DAT 20/40-GB tape drive, LVD, carbon black (C5686C) See Supported Options List -- http://h18002.www1.hp.com/alphaserver/options/asds15a/asds15a_options.html-- for complete listing of supported options and configuration details. See option specific QuickSpecs for complete list of country specific SKUs.	3R-A6831-AA
	DAT 72-GB 4-mm 5.25-inch half-height LVD SCSI tape drive, carbon black (Q1522B)	3R-A6663-AA
Universal Tape Drives (For Front Access Storage Cage)	DAT 20/40-GB Universal tape drive, LVD, uses two slots. (Q1546A) See Supported Options List - http://h18002.www1.hp.com/alphaserver/options/asds15a/asds15a_options.html -- for complete listing of supported options and configuration details. See option specific QuickSpecs for complete list of country specific SKUs.(cannot be sold in Europe)	3R-A4745-AA
	DAT 36/72-GB LVD Universal tape drive, carbon black, uses two slots (Q1529A) (cannot be sold in Europe)	3R-A4547-AA

Step 6 – Mandatory Selection of Power Cord

Desktop Power Cords	North America, 2.5-meter	3X-BN46K-2E
	Australia, New Zealand, China, 2.5-meter (8121-0838)	3R-A6023-AA
	Central Europe, 2.5-meter	BN19C-2E
	Denmark, 2.5-meter (103541-481)	BN19K-2E
	Egypt, India, South Africa, 2.5-meter (103541-AR1)	BN19S-2E
	Israel, 2.5-meter	3R-A6883-AA
	Italy, 2.5-meter	BN19M-2E
	Japan, 2.5-meter, Dentori approved	3X-BN46G-02
	Switzerland, 2.5-meter (103541-511)	BN19E-2E
	UK, Ireland, 2.5-meter	BN19A-2E
	United States 200V–240V, 75-inch	BN18J-1K
Rackmount Power Cords	Selection of a rackmount cord is mandatory per each DS15A mounted in rack.	
	Rackmount Power Cord C13-C14 black 4.5-meters	BN35S-4E

Options

Step 7 – DVD-ROM Drive – Optional

Optional 48X half-height DVD/CD-RW combo, carbon black for DS15A Internal Storage Cage – supported in 3X-BA15A-AB only	3X-A4412-BA
Optional 24X slim-line DVD/CD-RW, supported in 3X-BA15B-AB front access cage	3R-A7472-AA

Step 8 – M-Series Cabinets or Series 10000 Rack

Step 8a – M-Series Cabinets – Optional

- M-Series cabinet enclosures support up to 13 DS15A systems (H9A15)
- M-Series enclosures require selection of the following items:
  - Cabinet front door based on cabinet height
  - Factory integration

Cabinet Configuration Chart for AlphaServer DS15A Rackmount Systems

- Each system requires a DS15A M-Series Rackmount Kit (3X-PBX01-DA)
- Each system requires a rackmount power cord.

NOTE: The number of ballast kits required is determined by the number of system boxes. Ballast kits are required according to the following chart. For more information on M-Series Cabinet Enclosures, see http://h18002.www1.hp.com/alphaserver/products/m-series/index.html

Cabinet Configuration Chart for AlphaServer DS15A (3U) Rackmount Systems with Disk Shelves (12U)

M-Series Cabinet	System Rack Kit per DS15A system	M-Series Cabinet Height/Space	DS15A Systems	StorageWorks DS-SL13R/ 3R-A4075-AA/ 3R-A4076-AA* Disk Shelves	Ballast Kits Required
H9A10-ME/MF	3X-PBX01-DA	67-inch/32U	1 or 2	6	2
			3 or 4	6	1
			5	5	1
			6	4	0
			7	2	0
			8, 9, or 11	0	0
H9A15-ME/MF	3X-PBX01-DA	79-inch/39U	1 or 2	6	2
			3 or 4	6	1
			5	5	1
			6	4	1
			7	2	0
			8 to 13	0	0

Options

* 3R-A4075-AA and 3R-A4076-AA are not supported in a shared-SCSI cluster using the 3X-KZPEA-DB.

M-Series Rackmount Kit for AlphaServer DS15A	• Rackmount kit must be ordered separately • DS15A M-Series rackmount kit	3X-PBX01-DA
M-Series Cabinets	67-inch carbon black cabinet with 56-inch or 33U of usable vertical space; 200V to 240V dual-16A controller, 16 IEC C13 outlets, two input power plug NEMA, Americas, Asia Pacific; includes rear door	H9A10-ME
	67-inch carbon black cabinet with 56-inch or 33U of usable vertical space; 240V dual-16A controller, 16 IEC C13 outlets, two input power plug IEC 309, 20A, Europe; includes rear door	H9A10-MF
	79-inch carbon black cabinet with 68.25-inch or 40U of usable vertical space; 200V to 240V dual-16A controller, 16 IEC C13 outlets, two input power plug NEMA L620P, Americas, Asia Pacific; includes rear door	H9A15-ME
	79-inch carbon black cabinet with 68.25-inch or 40U of usable vertical space; 240V dual-16A controller, 16 IEC C13 outlets, two input power plug IEC 309, 20A, Europe; includes rear	H9A15-MF
StorageWorks Shelves Supported in M-Series Cabinets with Front Doors (H9A10/ H9A15)	StorageWorks 14-slot 4314R Rackmount Enclosure, Single bus/Power supply, Ultra160/LVD	DS-SL13R-AA
	StorageWorks 14-slot 4314R Rackmount Enclosure, Single bus/Power supply, Ultra160/LVD	DS-SL13R-AJ
	StorageWorks 14-slot 4354R Rackmount Enclosure, Dual bus/Power supply, Ultra160/LVD	DS-SL13R-BA
	StorageWorks 14-slot 4354R Rackmount Enclosure, Dual bus/Power supply, Ultra160/LVD	DS-SL13R-BJ
M-Series Cabinet Rear Cabinet Extender	Rear cabinet extender, carbon black, for H9A10-ME/MF cabinets	H9C10-ZE
	Rear cabinet extender, carbon black, for H9A15-ME/MF cabinets	H9C15-ZE
M-Series Cabinet Front Door	• Requires selection of door based on cabinet height	
	Front door, carbon black, for H9A10-ME/MF cabinet enclosure	3X-H9C10-RF
	Front door, carbon black, for H9A15-ME/MF cabinet enclosure	3X-H9C15-RF
M-Series Cabinet Factory Integration	• Mandatory selection	
	Factory Integration of systems and storage devices assembled and configured in cabinet enclosure for H9A10 or H9A15 cabinet enclosures	YS-ASCAA-AA
M-Series Cabinet Ballast Kits	• Add ballast kits as required • Ballast is added to a cabinet at particular locations for specific configurations to meet safety regulations for installation, operation, and service; see Cabinet Configuration Charts	
	Two 35 to 40 lb steel plates	H9C10-MC

M-Series Cabinet Rackmount Power Cord	Rackmount Power Cord C13-C14, black 4.5-meters	BN35S-4E

Step 8b – HP Rack 10000 G2 Series – Optional

The HP Rack 10000 Series were designed to the 19-inch RETMA standard. The Racks accommodate all HP equipment (ProLiant, Alpha Systems, StorageWorks, UPS, and PDUs) in addition to select third-party equipment.
See HP Rack 10000 G2 Series QuickSpecs for details:
http://h18000.www1.hp.com/products/quickspecs/12402_div/12402_div.HTML

Configuration Guidelines

1. All DS/ES Base Systems require a rack kit to mount systems in a 10000 G2 Series Rack (see below).
2. All Base Systems include all required internal IEC/IEC power cords.

10000 G2 Series Rack	10000 G2 Series 42U Rack – mandatory selection of three-phase or two single-phase Power Distribution Units required	AF004A
Rack Kit – Mandatory for 10000 G2 Series Rack	Order one for each DS15A System for mounting in 10000 G2 Series Rack	3X-PBX01-DB
Side Panel Kit – Mandatory Choice of Side Panel Kit or Baying Kit for 10000 G2 Series Rack	Order one per 10000 G2 Series Rack	AF054A
Baying Kit – Mandatory Choice of Side Panel Kit or Baying Kit for 10000 G2 Series Rack	Used to join two or more Series 10000 G2 Racks	248931-B21
Power Distribution Units – Mandatory for 10000 G2 Series Rack		
Single-phase PDU	Single-phase PDU for North America/Japan 200-240V 20A input plug NEMA L620P; 16 outlets	3X-H7609-EB
	Single-phase PDU for International, 240V 20A input plug IEC309, 16 outlets	3X-H7609-DB

Step 8c – KVM (Keyboard, Video, Mouse) Switch – Optional

KVM (Keyboard, Video, Mouse) Switch – Optional	The HP Server Console Switch 1 x 8 (8-port) is supported on Alpha Systems using PS/2 mouse and keyboard with VGA video – this includes support for the PS/2 interface adapter, part number 262588-B21, required for operation. The switch is supported on systems running Tru64 UNIX operating system – minimum version V5.1B and the OpenVMS operating system - minimum version 7.3-2. The KVM is 1U high and can be installed in the M-Series cabinet or Series 10000 rack. Supports up to eight servers.	
	HP Server 1 x 8-port KVM Console Switch	336044-B21
CAT5e Cables	3 foot (1m) – 4 pack	263474-B21
	6 foot (2m) – 8 pack	263474-B22
	12 foot (4m) – 8 pack	263474-B23
	20 foot (6m) – 4 pack	263474-B24
	40 foot (12m) – 1 pack	263474-B25
Interface Adapters	PS/2 Interface Adapter – 1 pack	262588-B21

	PS/2 Interface Adapter – 8 pack	262587-B21
	NOTE: Supported graphics card – ATI RADEON 7500 (3X-PBXGG-AA) For more information, refer to the Release Notes at: http://h18002.www1.hp.com/alphaserver/download/console_switch_rn.pdf http://h18002.www1.hp.com/alphaserver/download/html/console_switch_rn.html	

Step 9 – External Storage – Optional

- Tape drives require country-specific power cord.
- Use these cables to connect the following devices to the DS15A SCSI port:
  3X-BC56J-xx to StorageWorks Shelves, BN38C-xx to external tape drives
- The 3X-KZPEA-DB and the DS15A SCSI port is supported in a 2 node shared bus configuration. The following components are required for Shared SCSI Bus configurations (per shared bus) connected to the 3X-KZPEA-DB:
  - 3X-H8411-AA – Shared SCSI adapter kit
  - 3X-BN56A-03 or 3X-BN56A-04 – 3M or 4M terminator SCSI cable
- Shared bus configurations connected to the DS15A SCSI port require the following components:
  - 3X-H8411-BA – Shared SCSI adapter kit for DS15A external SCSI port
  - 3X-BN56A-03 or 3X-BN56A-04 – 3M or 4M terminator SCSI cable
- Refer to KZPEA release notes for latest information on shared SCSI requirements and setup:
  http://h18002.www1.hp.com/alphaserver/products/storage/kzpea/index.html

Tape Devices

DAT Tabletop Tape Drives	DAT 36/72-GB LVD tabletop SSI tape drive with 120V North America power cord, carbon black; Tru64 UNIX only See Supported Options List - http://h18002.www1.hp.com/alphaserver/options/asds15a/asds15a_options.html -- for complete listing of supported options and configuration details. See option specific QuickSpecs for complete list of country specific SKUs.	Q1523B
	DAT 40-GB LVD tabletop tape drive, carbon black See Supported Options List - http://h18002.www1.hp.com/alphaserver/options/asds15a/asds15a_options.html -- for complete listing of supported options and configuration details. See option specific QuickSpecs for complete list of country specific SKUs.	C5687D
DAT Hot-plug Tape Drive	DAT 20/40-GB hot-plug LVD Universal tape drive; carbon black; uses two slots in 43xxx storage shelves (Q1546A) (cannot be sold in Europe)	3R-A4745-AA
	DAT 36/72-GB DDS5 hot-plug LVD Universal tape drive; carbon black; uses two slots in 43xxx storage shelves (Q1529A) (cannot be sold in Europe)	3R-A4547-AA
DAT Autoloaders	DAT 72x10e external auto loader See Supported Options List – http://h18002.www1.hp.com/alphaserver/options/asds15a/asds15a_options.html -- for complete listing of supported options and configuration details. See option specific QuickSpecs for complete list of country specific SKUs.	AE313A

Options

DLT/SDLT Tabletop Tape Drives	DLT 80/160-GB VS 160 half-height external tape drive, NA, Tru64 Unix only	A7570B
	DLT 80/160-GB VS 160 half-height external tape drive, WW, Tru64 Unix only	A7571B
	SDLT 600-GB external tape drive, NA	A7519B
	SDLT 600-GB external tape drive, WW	A7520B
Ultrium Tabletop Tape Drives	Ultrium 460 tabletop tape drive, two per system, two per SCSI bus, Supported with 3X-KZPEA-xx, KZPCA-xx, and DEPVZ SCSI adapters only. Ultrium 460 tape drives are cluster-friendly devices, but cannot be shared by cluster members. Tru64 UNIX V5.1A requires Patch Kit 4 and NHD7 Tru64 UNIX V5.1B requires NHD7 Minimum version of OpenVMS V7.3-1 plus TIMA kit Please see Supported Options List for more details.	Q1520B
3U Rackmount Tape Drive Enclosure	3U LVD Rackmount Tape Drive Enclosure for use in H9Axx M-Series Cabinets, 0 drives, carbon black	274338-B22
	Rackmount Kit for H9Axx Series Cabinets, carbon black – required for mounting 3U Rackmount Tape Drive Enclosure in M-Series cabinet	3R-A3804-AA
	NOTE: The 3U Tape Drive Enclosure supports up to four internal half-height removable devices, or up to two full height devices. Select up to four DAT devices, or two DLT/SDLT devices with 3U Rackmount Tape Drive Enclosure (274338-B21), or select preconfigured configurations listed below.	

Storage Controllers/Host Bus Adapters for StorageWorks Pedestals and Shelves

- Each storage controller/adapter uses one PCI slot

	Maximum # Supported		
	Tru64 UNIX	OpenVMS	
PCI-X 64-bit 144-MHz 2-GB StorageWorks Fibre Channel Host Bus Adapter - FCA2684 - single channel NOTE: For configuration details refer to the Supported Options List at http://h18002.www1.hp.com/alphaserver/options/asds15a/asds15a_options.html The following pointer also provides additional information regarding this FCA: http://h18006.www1.hp.com/products/storageworks/fca2684/index.html	2	2	DS-A5132-AA
PCI-X 64-bit 144-MHz 2-GB StorageWorks Fibre Channel Host Bus Adapter - FCA2684 - dual channel NOTE: For configuration details refer to the Supported Options List at http://h18002.www1.hp.com/alphaserver/options/asds15a/asds15a_options.html The following pointer also provides additional information regarding this FCA: http://h18006.www1.hp.com/products/storageworks/fca2684/index.html	2	2	DS-A5134-AA
Fibre Channel cable			BNGBX-xx
PCI 1-port Ultra2 SCSI (LVD) single-ended adapter, 68-pin HD connector, requires BN38C cable (2 to 20 meters) to connect to single-ended UltraSCSI shelf	2	2	3X-KZPCA-AA
68-pin HD male-to-VHDCI male UltraSCSI cable; required for each external UltraSCSI shelf attached to KZPCA-AA adapter			BN38C-xx

PCI 2-channel LVD multi-mode Ultra3 SCSI adapter, VHDCI; requires use of Ultra160 SCSI cables.	2	2	3X-KZPEA-DB
Ultra160 SCSI cables xx=02 for 6 feet, 03 for 12 feet, 04 for 24 feet			3X-BC56J-xx
PCI 2-port PCI to Ultra3, 64-bit, 66-MHz, LVD backplane RAID controller with 128-MB cache (uses one PCI slot); requires connection to DS-SL13R-xx or 3R-A4075-AA/3R-A4076-AA shelves. Requires use of Ultra160 SCSI cables. NOTE: Shared bus not supported under OpenVMS. OpenVMS host-based volume shadowing is supported with restrictions. See OpenVMS release notes. Connection to internal drives not supported; connection of RAID controllers directly to DS15 Internal Storage Cage or Front Access Storage Cage is not supported.	4	4	3X-KZPDC-BE

PCI 4-port PCI to Ultra3, 64-bit, 66-MHz, LVD backplane RAID controller with 256-MB cache (uses one PCI slot); requires connection to DS-SL13R-xx or 3R-A4075-AA/3R-A4076-AA shelves. Requires use of Ultra160 SCSI cables. NOTE: Shared bus not supported under OpenVMS. OpenVMS host-based volume shadowing is supported with restrictions. See OpenVMS release notes. Connection to internal drives not supported; connection of RAID controllers directly to DS15A Internal Storage Cage or Front Access Storage Cage is not supported.	4	4	3X-KZPDC-DF
Ultra160 SCSI cables xx=02 for 6 feet, 03 for 12 feet, 04 for 24 feet			3X-BC56J-xx
PCI-to-10/100 MBPS Ethernet, graphics, LVD SCSI combination adapter NOTE: Attaching UltraSCSI disks to a bus segment that contains devices both internal and external to the system unit is not supported.	1	1	3X-DEPVZ-AA

MSA1000 Modular SAN Array	MSA1000 StorageWorks Modular SAN Array. For configuration details see http://h18002.www1.hp.com/alphaserver/products/storage/index.html.	201723-B22
	NOTE: Requires M-Series Rack Kit.	313877-B21
	M-series Rack Kit	3R-A5281-AA

Options

StorageWorks Fibre Channel Switches	HP supports three product lines of Fibre Channel switch products that may be used to build SAN fabrics. Each product line provides certain advantages that apply to specific applications. For more information on specific switch models and selection, please refer to Chapter 2 in the SAN Design Guidelines: http://www.hp.com/go/SANDesignGuide The B-Series product line includes a wide range of Fibre Channel switches, described as "SAN switches" and "Core switches." Products in this family include switches from the HP StorageWorks SAN Switch 2/16 to the HP StorageWorks Core Switch 2/64. This product line includes switches with 8, 16, 32, and 64 ports, including both full-function and entry-level models. The HP StorageWorks Core Switch 2/64 includes a pair of independent 64-port switches in a single chassis with a high level internal redundancy. The C-Series product line includes the Cisco MDS 9506 and 9509 Multilayer Directors and the Cisco MDS 9216, 9120, and 9140 Multilayer Fabric Switches. The MDS 9506 is supported with 224 ports, over seven modular chassis consisting of both 16-port and 32-port modules. The MDS 9506 is supported with 128 ports, over four modular chassis consisting of both 16 port and 32 port modules. The MDS 9216 has a basic configuration with 16 ports. It has an expansion slot that supports either a 16- or a 32-port card, for 32 or 48 ports in total. The M-Series Fabric product line includes a wide range of Fibre Channel switches described as "Directors" and "Edge switches." A partial list of products in this family includes the HP StorageWorks Director 2/140 and the HP StorageWorks Edge Switch 2/32. This product line includes switches with 16, 24, 32, 64, and 140 ports internal microcode. The HP StorageWorks Director 2/64 and 2/140 switches have a high level of internal redundancy. For part number and configuration information, see the SAN infrastructure switch information at http://www.hp.com/go/san Also, See Supported Options List at -- http://www.compaq.com/alphaserver/options/asds10/asds10_options.html -- for complete listing of supported options and configuration details.	
StorageWorks Universal Drive Shelves – Model 4314R (Ultra3)	StorageWorks Model 4314R Ultra3 SCSI (LVD) single bus, Universal drive rackmount shelf, North America and International, except Japan	DS-SL13R-AA
	Same as above, Japan	DS-SL13R-AJ
StorageWorks Universal Drive Shelves – Model 4354R (Ultra3)	StorageWorks Model 4354R Ultra3 SCSI (LVD), dual bus, Universal drive rackmount shelf, North America and International, except Japan	DS-SL13R-BA
	Same as above, Japan	DS-SL13R-BJ
StorageWorks Modular Smart Array 30 (MSA30) (Ultra320)	NOTE: The following enclosures require M-series Rack Kit (313877-B21)	
	StorageWorks Modular Smart Array SW4414R Single Bus Ultra320 Rackmountable SCSI Disk Drive 4-node Storage Enclosure (302969-B21). See Systems and Options Listing for configuration details.	3R-A4075-AA

	StorageWorks Modular Smart Array SW4454R Dual Bus Ultra320 Rackmountable SCSI Disk Drive 4-node Storage Enclosure (302970-B21). For configuration details before ordering, see Supported Options List http://h18002.www1.hp.com/alphaserver/options/asds15a/asds15a_options.html - for complete listing of supported options and configuration details. See option specific QuickSpecs for complete list of country specific SKUs.	3R-A4076-AA
	M-series Rack Kit	313877-B21 3R-A5281-AA
	NOTE: 3R-A4075-AA and 3R-A4076-AA are not supported in a shared-SCSI cluster using the 3X-KZPEA-DB.	

System Disk Drives (Supported in Model 4314R, 4314T, 4354R, or MSA30 Universal Drive Shelves)	36.4-GB Ultra320 SCSI 15,000 rpm 1-inch Universal disk drive	3R-A3849-AA
	72.8-GB Ultra320 SCSI 10,000 rpm 1-inch Universal disk drive	3R-A3839-AA
	72.8-GB Ultra320 SCSI 15,000 rpm 1-inch Universal disk drive	3R-A3851-AA
	146-GB Ultra320 SCSI 10,000 rpm 1-inch Universal disk drive	3R-A3841-AA
	146-GB Ultra320 SCSI 15,000 rpm 1-inch Universal disk drive	3R-A4945-AA
	300-GB Ultra320 SCSI 15,000 rpm 1-inch Universal disk drive	3R-A6726-AA
	300-GB Ultra320 SCSI 10,000 rpm 1-inch Universal disk drive	3R-A4952-AA

Step 10 – UltraSCSI RAID Array Controllers and UltraSCSI RAID Packaged Solutions – Optional

StorageWorks Disk Array Family

NOTE: The HP StorageWorks Disk Array Family, specifically the XP128 and XP1024, are now supported on AlphaServer DS15A systems. For product and ordering information, refer to the following Web pages: http://www.hp.com/products1/storage/products/disk_arrays/highend/xp1024/index.html http://www.hp.com/products1/storage/products/disk_arrays/highend/xp128/index.html
The following part numbers have been assigned for reference purposes only:

3R-A4417-AA	A7876A	XP128 Disk Array Control Frame
3R-A4418-AA	A7906A	XP1024 Disk Array Control Frame

Step 11 – Networks and Communications – Optional

- Reference individual product information for operating system support.
- Systems include dual embedded 10/100 BaseT Ethernet ports (BN25G-xx cable must be ordered separately)
- Additional Ethernet ports can be added using available PCI slots

Options

	Maximum # Supported		
	Tru64 UNIX	OpenVMS	
Ethernet 10/100			
Single-port 100Mbps (MMF/duplex-SC) add-on daughter card for use with 3X-DE602-BR. The combined 3X-DE602-BR 3X-DE602-FR provides two 10/100 (UTP/RJ45s) and one 100Mbps (MMF/SC) ports in a single PCI slot option. Maximum two per system, maximum ten 10/100 Ethernet ports supported per system. Use BN34A or BN34B cables. NOTE: The 3X-DE602-TR cannot be used standalone. NOTE: Two 10/100 Ethernet ports included with DS15A system.	2	2	3X-DE602-FR
PCI (32-/64-bit, 33-/66-MHz) dual-port 10/100 Ethernet (UTP/RJ45s) NIC and Base Module. (One 3X-DE602-TR or 3X-DE602-FR optional add-on daughter card can be combined with this module.) Maximum two per system, maximum ten 10/100 Ethernet ports per system. Use BN25G, BN26M, BN24Q, or BN28Q twisted pair RJ45 cables. NOTE: Two 10/100 Ethernet ports included with DS15A system.	2	2	3X-DE602-BR
Dual-port 10/100 Ethernet (UTP/RJ45) add-on daughter card for use with the 3X-DE602-BR only. The combined 3X-DE602-BR and 3X-DE602-TR modules provide four 10/100 (UTP/RJ45s) ports in a single PCI slot option; allows for a maximum of 16 ports per system. Maximum two per system, maximum ten 10/100 Ethernet ports per system. Use BN25G, BN26M, BN24Q, or BN28Q twisted pair RJ45 cables. NOTE: The 3X-DE602-TR cannot be used standalone. NOTE: Two 10/100 Ethernet ports included with DS15A system.	2	2	3X-DE602-TR
Cable for 10BaseT twisted pair connection			BN25G-xx
PCI-to-10/100 MBPS Ethernet, graphics, LVD SCSI combination adapter	1	1	3X-DEPVZ-AA
Gigabit Ethernet			
1-port PCI-X/PCI to MMF Gbe NIC	2	2	3X-DEGXA-SR
1-port PCI-X/PCI to 10/100/1000 UTP Ethernet NIC	2	2	3X-DEGXA-TR

Asynchronous Communications (ASYNC)			
PCI (32-bit, 33-MHz) to quad-port Async Communications NIC with DB-25 octopus cable	2	2	PBXDA-BA
PCI (32-bit, 33-MHz) to 8-port Async Communications NIC with DB-25 octopus cables	2	2	PBXDA-BB
PCI 16-port asynchronous controller, cable included; maximum three PBXDA-Ax per system	2	2	PBXDA-AC
Synchronous Communications (SYNC)			
PCI (32-bit, 33-MHz) to dual-port intelligent synchronous communications NIC. Requires at least one (maximum two) BN34x synchronous cable listed below.	2	2	3X-PBXDD-AA
PCI (32-bit, 33-MHz) to quad-port intelligent synchronous communications NIC. Requires at least one (maximum four) BN34x synchronous cable listed below.	2	2	3X-PBXDD-AB

Synchronous-Specific Cables		
EIA-530 single-port cable		3X-BC34G-06
V.24/EIA-232 single-port cable		3X-BC34L-06
V.11/x.21 single-port cable		3X-BC33S-06
V.35 single-port cable		3X-BC34T-06
Ethernet, FDDI, ATM Multi-use Cables		
Multimode fiber optic (MMF) 62.5/125um duplex cable, with SC-to-ST connectors. xx = available lengths: (2E, 4E, 01, 03, 10, 20, 30) for 2.4, 4.5, 1, 3, 10, 20, 30 meters		BN34A-xx
Multimode fiber optic (MMF) 62.5/125um duplex cable, with SC-to-SC connectors. xx = available lengths: (2E, 4E, 01, 03, 10, 20, 30) for 2.4, 4.5, 1, 3, 10, 20, 30 meters		BN34B-xx
Category 5e (4-Unshielded Twisted Pairs / UTP) straight-through cable with RJ45-to-RJ45 connectors for system to switch, repeater, or hub connectivity. xx = available lengths: (0B, 0E, 01, 03, 04, 07) for 0.2, 0.5, 1, 3, 4, 7 meters		BN25G-xx
Category 5e (4-Twisted Pairs, Screened/ ScTP) straight-through cable with RJ45-to-RJ45 connectors for system to switch, repeater, or hub connectivity. xx = available lengths: (0E, 01, 03, 04, 07) for 0.5, 1, 3, 4, 7 meters		BN26M-xx
Category 5e (4-Unshielded Twisted Pairs / UTP) Xover cable with RJ45-to-RJ45 connectors for system to switch, repeater, or hub connectivity. xx = available lengths: (0E, 01, 03, 04, 07) for 0.5, 1, 3, 4, 7 meters		BN24Q-xx
Category 5e (4-Twisted Pairs, Screened / ScTP) Xover cable with RJ45-to-RJ45 connectors for system to switch, repeater, or hub connectivity. xx = available lengths: (0E, 01, 03, 04, 07) for 0.5, 1, 3, 4, 7 meters		BN28Q-xx

Step 12 – Graphics Adapters – Optional

- RAID Configuration Utility is accessible via console port for Tru64 UNIX and OpenVMS systems; optional graphics capability available
- Select graphics adapter, monitor, and country-specific keyboard if required
- Media kit (comes with RADEON 7500 card) for Tru64 UNIX (QA-62RAA-H8) and for OpenVMS (QA-62PAA-H8)

Options

	Maximum # Supported		
	Tru64 UNIX	OpenVMS	
ATI RADEON 7500 64-MB PCI 2D/3D Graphics Accelerator NOTE: Only RADEON 7500 PCI cards can be used in a multi-card environment. For multi-head support, refer to Read Me First document/Release Notes.	4 - (2D only) 1 - 3D Dual head on first card only (unique video using DVI port for 2D or 3D) V5.1B NHD-7	4 - 2D/3D Dual head on first card only (cloned video using DVI port for 2D or 3D) V7.3-1 with Tima Kit: DEC-AXPVMS-VMS731_GRAPHICS-V0300-4.PCSI	3X-PBXGG-AA
Tru64 UNIX Open 3D license for RADEON 7500 (required for 3D functionality)			QL-6ZRA9-AA
OpenVMS Open 3D license for RADEON 7500 (required for 3D functionality)			QL-0ADA9-AA
Additional Tru64 UNIX media kit for RADEON 7500 (initial kit ships with RADEON 7500 card)			QA-6ZRAA-H8
Additional OpenVMS media kit for RADEON 7500 (initial kit ships with RADEON 7500 card)			QA-6ZPAA-H8
PCI-to-10/100 MBPS Ethernet, graphics, LVD SCSI combination adapter NOTE: Multi-head graphics not supported.	1	1	3X-DEPVZ-AA

Step 13 – Monitors

- Graphics monitors other than those listed can be used if compatible with SVGA graphics ordered with system
- A video cable, 6-foot/1.8-meter length, is included with all variants of monitors
- Video extension cable required if monitor is located more than 1 meter from server
- Monitors will ship with, but not be integrated with systems.

CRT Monitors	V7650 17-inch (16-inch viewable image size) 0.24mm FST multi-frequency color monitor, 2-tone (carbon/silver), VGA to 1024 x 768 @85 Hz, MPRII/TCO 99/Energy Star Compliant, Northern Hemisphere with NA power cord, VGA cable	3R-A5853-AA
	Same as above, with Euro power cord	3R-A5854-AA
	Same as above, with PRC power cord, CCIB	3R-A5857-AA
	Same as above, Taiwan, NA power cord	PF996AA#AB0
	Same as above, Southern Hemisphere with Australia/New Zealand power cord	PF996AA#ABG

Options

Flat Panel Monitors	LP2065 20" (20.1" viewable image area) flat panel monitor 0.255mm pixel pitch, 1600 x 1200 @60 Hz, A + D, TCO 03, Energy Star compliant, 4 video input connectors, (VGA, DVI-I, composite video and s-video), NA power cord, VGA and DVI-I cables	3R-A6701-AA
	LP2065 20" (20.1" viewable image area) flat panel monitor 0.255mm pixel pitch, 1600 x 1200 @60 Hz, A + D, TCO 03, Energy Star compliant, 4 video input connectors, (VGA, DVI-I, composite video and s-video), Euro power cord, VGA and DVI-I cables	3R-A6702-AA
	L1955, 19" (19" viewable image size) TFT flat panel monitor, 0.294mm pixel pitch, 1280 x 1024 @60Hz, multi-mode support, MPRII/TCO 03/Energy Star compliant, one VGA, one DVI-I input connector. NA power cord, VGA and DVI-D cables	PD974AA#ABA
	L1955, 19" (19" viewable image size) TFT flat panel monitor, 0.294mm pixel pitch, 1280 x 1024 @60Hz, multi-mode support, MPRII/TCO 03/Energy Star compliant, one VGA, one DVI-I input connector. Euro power cord, VGA and DVI-D cables	PH466A#ABB
	L1506, 15" (15" viewable image size) TFT flat panel monitor, 0.297 mm pixel pitch, 1024 x 768 @60 Hz, multi-mode support, MPR-II/TCO 03/Energy Star compliant, NA power cord, VGA cable	3R-A6515-AA
	Same as above, with Euro power cord	3R-A6516-AA
Flat Panel Monitor – Rack Mountable	TFT7210R 17" (17" viewable image area) 1U rack-mount flat panel display, 0.264mm pixel pitch, 1280 x 1024 @60/75 Hz, high and low voltage power cords, worldwide	3R-A5187-AA
Video Extension Cable	6-foot/1.8-meter video extension cable optional	BN39C-02
Monitor Power Cords	North American, 120 V, 75-inch	BN26J-1K
	Australia, New Zealand, China, 2.5-meter (8121-0838)	3R-A6023-AA
	Central Europe, 2.5-meter	BN19C-2E
	Denmark, 2.5-meter	BN19K-2E
	Egypt, India, South Africa, 2.5-meter	BN19S-2E
	Israel, 2.5-meter	3R-A6883-AA
	Italy, 2.5-meter	BN19M-2E
	Japan, 2.5-meter, Dentori approved	3X-BN46F-02
	Switzerland, 2.5-meter	BN19E-2E
	UK, Ireland, 2.5-meter	BN19A-2E

Keyboards – Optional

- Select a keyboard and mouse
- All keyboards listed may not be available in all geographies
- Select an opal OpenVMS keyboard for use with VT5xx text terminals.

Options

	Opal	Carbon	
Keyboard/Language	OpenVMS	Tru64 UNIX	OpenVMS*
US/UK keyboard	3X-LK465-A2	3R-A6586-AA	3X-LK464-A2
Arabic keyboard	-	3R-A6572-AA	-
Belgian keyboard	3X-LK465-AB	3R-A6573-AA	3X-LK464-AB
BHCSY keyboard	-	3R-A6574-AA	-
Canadian/English keyboard	3X-LK465-AQ	-	3X-LK464-AQ
Canadian/French keyboard	3X-LK465-AC	3R-A6575-AA	3X-LK464-AC
Cyrillic keyboard (Russian)	3X-LK465-BT	3R-A6576-AA	3X-LK464-BT
Czech keyboard	3X-LK465-BV	3R-A6577-AA	3X-LK464-BV
Danish keyboard	3X-LK465-AD	3R-A6578-AA	3X-LK464-AD
Dutch keyboard	3X-LK465-AH	3R-A6579-AA	3X-LK464-AH
Finnish keyboard	3X-LK465-AF	3R-A6580-AA	3X-LK464-AF
French keyboard	3X-LK465-AP	3R-A6581-AA	3X-LK464-AP
German keyboard	3X-LK465-AG	3R-A6582-AA	3X-LK464-AG
Greek keyboard	3X-LK465-BH	3R-A6583-AA	3X-LK464-BH
Hebrew keyboard	3X-LK465-AT	3R-A6584-AA	3X-LK464-AT
Hungarian keyboard	3X-LK465-BQ	3R-A6585-AA	3X-LK464-BQ
International keyboard	-	3R-A6586-AA	-
Italian keyboard	3X-LK465-AI	3R-A6587-AA	3X-LK464-AI
Japanese keyboard	-	3R-A6588-AA	-
Korean keyboard	-	3R-A6589-AA	-
Latin-American keyboard	-	3R-A6590-AA	-
Norwegian keyboard	3X-LK465-AN	3R-A6591-AA	3X-LK464-AN
Polish keyboard	3X-LK465-BP	3R-A6592-AA	3X-LK464-BP
Portuguese keyboard	3X-LK465-AV	3R-A6593-AA	3X-LK464-AV
Romanian keyboard	3X-LK465-BL	-	3X-LK464-BL
Simplified Chinese keyboard	-	3R-A6594-AA	-
Slovak keyboard	3X-LK465-CZ	3R-A6595-AA	3X-LK464-CZ
Spanish keyboard	3X-LK465-AS	3R-A6596-AA	3X-LK464-AS
Swedish keyboard	3X-LK465-AM	3R-A6597-AA	3X-LK464-AM
Swiss/French keyboard	3X-LK465-AK	3R-A6598-AA	3X-LK464-AK
Swiss/German keyboard	3X-LK465-AL	-	3X-LK464-AL
Traditional Chinese keyboard	-	3R-A6599-AA	-
Thai keyboard	-	3R-A6600-AA	-
Turkish Q keyboard	3X-LK465-BU	3R-A6601-AA	3X-LK464-BU
Turkish/F keyboard	3X-LK465-BW	-	3X-LK464-BW
UK keyboard	-	3R-A6602-AA	3X-LK464-A2
Yugoslavian keyboard	3X-LK465-BY	-	3X-LK464-BY

Options

*OpenVMS keyboard (3X-LK464-xx) comes with PS/2 and USB connectors

Keyboard or Mouse Extension Cable	6-foot/1.8-meter keyboard or mouse extension cable; to extend both keyboard and mouse order two cables	3X-BC34A-06
Mouse	3-button mouse – carbon	3X-PBQWS-PS

Step 14 – MEMORY CHANNEL – Optional

Tru64 UNIX Systems	• Requires Tru64 UNIX V5.0A or later and either TruCluster Server license (QL-6BRAC-AA) or TruCluster Plus Software Package (QP-6R9AC-AA).
OpenVMS Systems	• Requires OpenVMS V7.1-2 or later and OpenVMS Cluster license (QL-MUZAC-AA).
Configuring Information	• Up to two PCI-to-System Area Network adapters (CCMAB-BA) are supported in a single system. • Two-node clusters can be configured by ordering a CCMAB-BA for each node and one BN39B-04 or BN39B-10 cable; cable connects directly to CCMAB-BA in each node. • For a two-node cluster that will not need to be rebooted when adding additional members, order one CCMAB-BA adapter and one BN39B-04 or BN39B-10 cable for each node, and one CCMHB-AA hub for the cluster. • For three- or four- node clusters, order one CCMAB-BA adapter and one BN39B-04 or BN39B-10 cable for each node, and one CCMHB-AA hub for the cluster. • Up to two PCI-to-System Area Network adapters (CCMAB-BA) are supported in a single system. • Two-node clusters can be configured by ordering a CCMAB-BA for each node and one BN39B-04 or BN39B-10 cable; cable connects directly to CCMAB-BA in each node. • For a two-node cluster that will not need to be rebooted when adding additional members, order one CCMAB-BA adapter and one BN39B-04 or BN39B-10 cable for each node, and one CCMHB-AA hub for the cluster. • For three- or four- node clusters, order one CCMAB-BA adapter and one BN39B-04 or BN39B-10 cable for each node, and one CCMHB-AA hub for the cluster. • CCMHB-AA includes four CCMLB-AA line cards and supports up to four nodes; expansion up to eight system nodes can be achieved by adding up to four CCMLB-AA line cards. • If two CCMAB-AAs are configured in each system, a second CCMHB-AA is required for greater than 2 node configurations. • If nodes must be separated by a distance longer than standard copper cables allow the CCMFB option converts the output of the standard CCMAB controller or CCMLB line card to single-mode fiber optic cable. The fiber optic connection may be up to 2,000 meters long between two CCMAB controllers connected in virtual hub mode, or 3,000 meters between a CCMAB controller and a

CCMHB hub. (The connection from the CCMHB hub to a second system may also be 3,000 meters.) The CCMFB option requires a second PCI slot in the system from which it draws power only. It is normally connected to the prerequisite CCMAB controller with the short BN39B-01 cable provided with the CCMFB. The CCMFB is also used in the CCMHB hub where it occupies a slot normally used by the CCMLB line card, limiting expansion to four radial fiber optic connections.

- CCMHB-BA hub does not contain any line cards and can be used to plug in up to eight CCMFB fiber optic converters. Two standard length single-mode fiber optic cables are available (BN34R-10 and BN34R-31); however, users normally provide this fiber optic connection. Fiber optic connectivity is completely transparent to the systems using it and has no performance impact.
- For integration of MEMORY CHANNEL hubs into cabinet configurations, a rackmount kit (2T-MAVRK-AA) and power cord (BN35S-02) are required.
- Please refer to Systems and Options Listing at – http://h18002.www1.hp.com/alphaserver/options/asds15a/asds15a_options.html or additional configuration information and restrictions.

MEMORY CHANNEL Controller	PCI System Area Network Controller, maximum two	CCMAB-BA
	System Area Network Hub with four line cards; includes BN19P-2E power cord for Canada, Japan, and U.S. operations- for other regions, order appropriate power cord from list below	CCMHB-AA
	Hub expansion box with no line cards	CCMHB-BA
	Expansion line card for CCMHB hub	CCMLB-AA
	1-meter cable for CCMAB and CCMHB	BN39B-01
	4-meter cable for CCMAB and CCMHB	BN39B-04
	10-meter cable for CCMAB and CCMHB	BN39B-10
	Copper-to-single mode fiber optic converter – requires BN34R-xx fiber optic connection	CCMFB-BA
	Rackmount kit for CCMHB hub	2T-MAVRK-AA
	Power cord for rackmount CCMHB hub	BN35S-02

MEMORY CHANNEL Power Cords	Australia, New Zealand, China	3R-A6023-AA
	Central Europe	BN19C-2E
	Denmark (103541-481)	BN19K-2E
	Egypt, India (103541-AR1)	BN19S-2E
	Ireland, United Kingdom	BN19A-2E
	Israel	3R-A6883-AA
	Italy (103541-461)	BN19M-2E
	Switzerland (103541-511)	BN19E-2E

Step 15 – Floor Stand

Floor Stand	Floor Stand for AlphaServer/AlphaStation DS15A	3X-BA73P-BB

Step 16 – Software – Required Selection of Media and Documentation for First System on Site

Tru64 UNIX

- Software processor code = E
- AlphaServer DS15A Tru64 UNIX systems include Base license, Unlimited User license, Server Extension license, Internet Express, and Secure Web Server
- AlphaStation DS15A Tru64 UNIX systems include 2-user Base license

When using Tru64 UNIX V5.0A or later	Tru64 UNIX media and online documentation on CD-ROM	QA-6ADAA-H8
	Tru64 UNIX full hard copy documentation	QA-6ADAA-GZ
	TruCluster Plus Software Package with licenses for TruCluster Server, Logical Storage Manager, and AdvFS Utilities	QP-6R9AC-AA
	TruCluster Server License	QL-6BRAC-AA
	AdvFS Utilities License	QL-0EGAE-AA
	Logical Storage Manager License	QL-2GVAE-AA
	Advanced Server for Tru64 UNIX, 25 client concurrent use license	QL-5U29M-3D
	Advanced Server for Tru64 UNIX, 50 client concurrent use license	QL-5U29M-3E
	Advanced Server for Tru64 UNIX, 100 client concurrent use license	QL-5U29M-3F
	Advanced Server for Tru64 UNIX, 250 client concurrent use license	QL-5U29M-3G
	Advanced Server for Tru64 UNIX, 500 client concurrent use license	QL-5U29M-3H
	Layered products media and documentation for Tru64 UNIX on CD-ROM	QA-054AA-H8
	DECnet/OSI end-system license for Tru64 UNIX	QL-MTJAE-AA
	DECnet/OSI extended function license for Tru64 UNIX	QL-MTKAE-AA

Options

OpenVMS

- AlphaServer DS15A OpenVMS systems include Base license with System Manager license and Hewlett-Packard Enterprise Integration Server License Package for OpenVMS
- AlphaStation DS15A OpenVMS systems include Base license, Concurrent Use 1-user license, and NAS 150 Client license
- Hewlett-Packard Enterprise Integration Package includes licenses for TCP/IP Services for OpenVMS, DECwindows Motif for OpenVMS Alpha, DECnet-Plus for OpenVMS Alpha End System, Archive/Backup System for OpenVMS Management Tools, Archive/Backup Agent for Windows NT, Office Server for OpenVMS, PATHWORKS 32, Advanced Server/PATHWORKS for OpenVMS and Office Server Client Access License

Separately Orderable Software Offerings include:

OpenVMS media and online documentation on CD-ROM	QA-MT1AA-H8
OpenVMS hard copy documentation	QA-001AA-GZ
Layered products media and documentation for OpenVMS on CD-ROM	QA-03XAA-H8

- OpenVMS Concurrent Use licenses provide the right to interactively use the operating system by the specified number of concurrent users on a designated OpenVMS system. OpenVMS Concurrent Use licenses can be moved from one system to another at user discretion and can be shared in a mixed OpenVMS VAX and OpenVMS Alpha cluster.
- OpenVMS Traditional Unlimited Use license is system specific and can only be used on one single system at a time. It cannot be shared between systems or in an OpenVMS VAX or OpenVMS Alpha Cluster.

Concurrent Use 1-user license	QL-MT3AA-3B
Concurrent Use 2-user license	QL-MT3AA-3C
Concurrent Use 4-user license	QL-MT3AA-3D
Concurrent Use 8-user license	QL-MT3AA-3E
Concurrent Use 16-user license	QL-MT3AA-3F
Concurrent Use 32-user license	QL-MT3AA-3G
Concurrent Use 64-user license	QL-MT3AA-3H
Concurrent Use 128-user license	QL-MT3AA-3J
Concurrent Use 256-user license	QL-MT3AA-3K
Traditional Unlimited User license	QL-MT2AE-AA
OpenVMS Cluster license for Alpha systems	QL-MUZAC-AA
OpenVMS Cluster Client license for Alpha systems	QL-3MRAC-AA
OpenVMS Cluster Client-to-Full OpenVMS Cluster Migration license	QL-6J7AC-AA

Step 17 – Hardware and Software Support Services

Hardware and Software Support Services

- Select one of the optional HP Care Pack Service Packages described below that best supports the customer's operational requirements for system availability.

Options

HP Care Pack Services	• HP Care Pack Services are available for AlphaServer/AlphaStation systems running Tru64 UNIX or OpenVMS operating systems. HP Care Pack Services are designed for customers who require support beyond that provided by the hardware warranty with coverage for both Principal servers/stations and SSPs (Subsequent System Packages) – that meet a full range of customer support requirements.

Program Features

HP Support Plus	• HP Support Plus offers combined hardware and software services in one package, providing support during standard HP office hours.
HP Support Plus 24	• HP Support Plus 24 offers combined hardware and software services in one package to help enhance the availability and performance of your IT infrastructure 24x7.
HP Proactive 24	• HP Proactive 24 (P24) is a combined hardware and software support solution designed to help you get more from your IT investment. P24 improves the effectiveness, performance, and availability of the technologies in your IT infrastructure.
HP Critical Service	• HP Critical Service (CS) is a comprehensive hardware and software support solution, designed for organizations running business critical applications. CS provides a combination of proactive and reactive services for mission critical environments with little or nor tolerance for downtime.

Program Features – Additional Services

Installation	• Pre-installation review • Unpacking of equipment • Assemble and test • Basic product usage info • No software installation added
Installation & Startup HP O/S	• Pre-installation review • Unpacking of equipment • Assemble and test • Basic product usage info • Install operating systems • Product configuration • Print and network access • Orientation

Options

HP Care Pack Services for AlphaServer/AlphaStation DS15A Systems (sold via Fusion Order Management System)				
	1-year Package ID#	Option ID#	3-year Package ID#	Option ID#
HP Support Plus	HA109A1	6HP	HA109A3	6HP
HP Support Plus 24	HA110A1	6HP	HA110A3	6HP
HP Proactive 24	HA111A1	6HP	HA111A3	6HP
HP Critical Service	HA112A1	6HP	HA112A3	6HP

NOTES:

- AlphaServer/AlphaStation DS15A systems include one-year hardware warranty with 5x9, on-site Next Business Day response.
- HP Care Pack Services include support for new HP branded hardware options internal to the AlphaServer/AlphaStation enclosure plus a monitor (17-inch or less excluding flat panel models).
- External storage devices/cabinets carry their own level of warranty and should be quoted separately for uplifted warranty services.
- In addition to the HP Care Pack Services shown above, other service packages are available for separate hardware and software support. For more information on Hardware and Software Upfront Services and other HP service options available for AlphaServers and AlphaStations, consult your Sales Account Manager, HP Services Principal, or visit http://www.hp.com/hps/ NOTE: This Web site is available in English only.

Physical Characteristics	Dimensions (H x W x D)	5.1 x 17.6 x 19 in (13 x 45 x 48 cm)
	Weight (maximum)	36 lb (16.3 kg)

Cabinets		H9A10 M-Series	H9A15 M-Series
	Dimensions (H x W x D)	67 x 23.6 x 36.1 in (170 x 60 x 91.6 cm)	79 x 23.6 x 36.1 in (200 x 60 x 91.6 cm)
	Shipping Dimensions	73 x 36 x 48 in (185.5 x 91.5 x 122 cm)	85 x 36 x 48 in (216 x 91.5 x 122 cm)
	Weight	280 lb (126 kg)	313 lb (142 kg)
	Shipping Weight	354 lb (159.3 kg)	369 lb (167.4 kg)
	Loading Capacity	1,408 lb (640 kg) (maximum)	1,408 lb (640 kg) (maximum)

System Unit

Environmental		
Temperature	Operating (Tower, Rackmount)	50° to 104° F (10° to 40° C)
	NOTE: Maximum operating temperature at sea level. Reduce by 1.8° F (1° C) for each 2,000 ft (660 m) above sea level.	
	Non-operating	–40° to 151° F (–40° to 66° C)
Humidity	Operating	10% to 95%
	Non-operating	20% to 80%
Heat Dissipation	Single unit = 176 Watts = 601 BTU/Hr	
	Rack of 12 systems = 2112 Watts = ~7,212 BTU/Hr	
Typical System	AlphaServer DS15A 1 GHz	
	Power Supply, 400W	
	Main logic board containing Alpha CPU, 21264C, 1 GHz	
	Main memory = 1 GB	
	(3) Hard disk drive	
	(1) DVD/CD-RW drive	
	(1) PCI Graphics Card	
	Running system exerciser during the power measurement.	
	Measured Input Voltage = 116 VAC RMS @ 60 Hz	
	Measured Input Current = 2.27 Amps RMS	
	Measured Input Power = 176 Watts	
Altitude (unpressurized)	Operating	10,000 ft (3,048 m)
	Non-operating	40,000 ft (12,192 m)
	NOTE: Higher altitudes are possible if maximum operating temperature is reduced.	
Electrical (Power supplies are universal, PFC, auto ranging, 100/240 VAC)		
Nominal Voltage (VAC)	100 to 120 VAC/220 VAC	
Operating Voltage Range (VAC) (temporary condition)	90 to 128 VAC/180 to 265 VAC	

Technical Specifications

Power Source Phase	Single/Single
Nominal Frequency (Hz)	60 Hz/50 Hz
Frequency Range (Hz)	59 to 61 Hz /49 to 51 Hz
Maximum Inrush Current	11 amps/22 amps
Power Supply (single cordset)	3.5 amps/1.7 amps

Acoustics (Declared values per ISO 9296 and ISO 7779)

AlphaServer DS15A with one or two HDD		*LWAdB*	*LpAm*, dBA (Operator position)	*LpAm*, dBA (Bystander Position)
	Idle	5.6	49	39
	Operating	5.7	50	40
Regulatory	Agency Approvals		UL: Listed to UL60950 (3rd edition)	
			CUL Listed: CAN/CSA-C22.2 No. 60950-00	
			TUV: EN 60950-1: 2001 GS marked	
			FCC: Part 15 Class A	
			CE: EN55022, EN55024	
			VCCI Class I ITE	
			BMSI: CISPR22, CNS13438	
			C-Tick: CISPR22, AS/NZS 3548	
	Reviewed to		AS/NZ 3260:1993 Australian/New Zealand Standard	
			EN 60950-1: 2001 European Norm	
			IEC950 (2nd edition, 4th amend)	

© Copyright 2003-2007 Hewlett-Packard Development Company, L.P.
The information contained herein is subject to change without notice.
UNIX® is a registered trademark or trademark of The Open Group in the U.S. and/or other countries. The only warranties for HP products and services are set forth in the express warranty statements accompanying such products and services. Nothing herein should be construed as constituting an additional warranty. HP shall not be liable for technical or editorial errors or omissions contained herein.