Internal Options:

Memory kits

- 512MB — 3X-MS315-EA
- 1GB — 3X-MS315-FA
- 2GB — 3X-MS315-GA

3X-BA15A-AA Standard Cage

- RZ3FD 36GB 3.5" — DS-RZ3FD-WA 36G 10k U320
- RZ3GA 72GB 3.5" — DS-RZ3GA-WA 36G 10k U320
- A3623 AIT200G — 3R-A3623-AA AIT 100/200GB 5.25"

3X-BA15B-AA Front Acces Cage

- A3849 36GB 1.0" — 3R-A3849-AA 36G 15k U320
- A3851 72GB 1.0" — 3R-A3851-AA 72G 15k U320
- A3841 146GB 1.0" — 3R-A3841-AA 146G 10k U320
- A3621 AIT200G — 3R-A3621-AA AIT 100/200GB Eats two slots

- 3X-PBXGG-AA — ATI RADEON 7500
- 3X-DE602-BB — 2x Ethernet
- 3X-DEGXA-TA — UTP/RJ45 GigabitE.
- 3X-KZPCA-AA — 1-port Ultra2 SCSI LVD
- 3X-KZPEA-DB — 2-port Ultra3 SCSI LVD2
- 3X-KZPDC-BE — RAID 2-ch U160 66MHz
- DS-KGPSA-EA — Fibre Ch 2Gbit/s

BN35S-4E pwr cbl in cabinet
3X-PBX01-DB Rack kit 10000 cabinet
3X-PBX01-DA Rack kit M-series

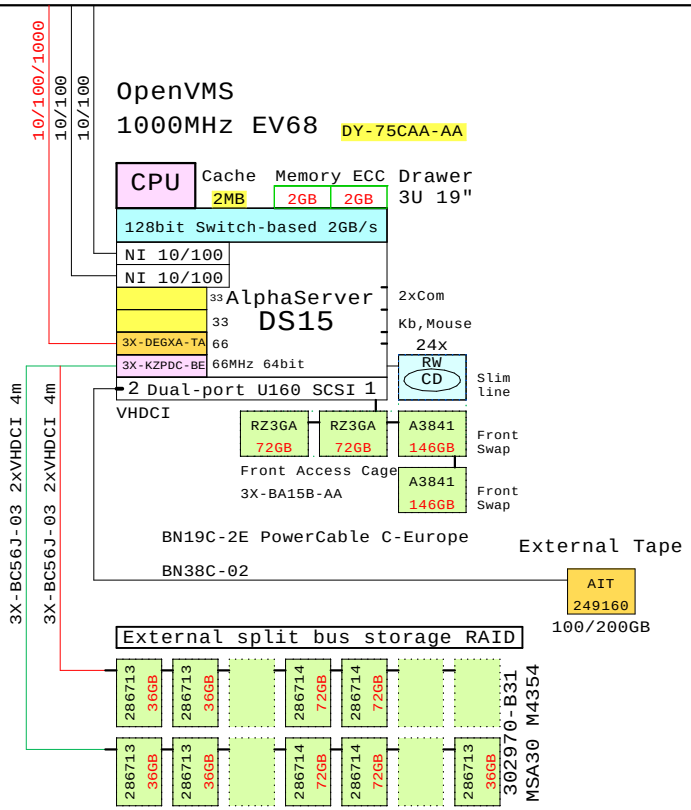

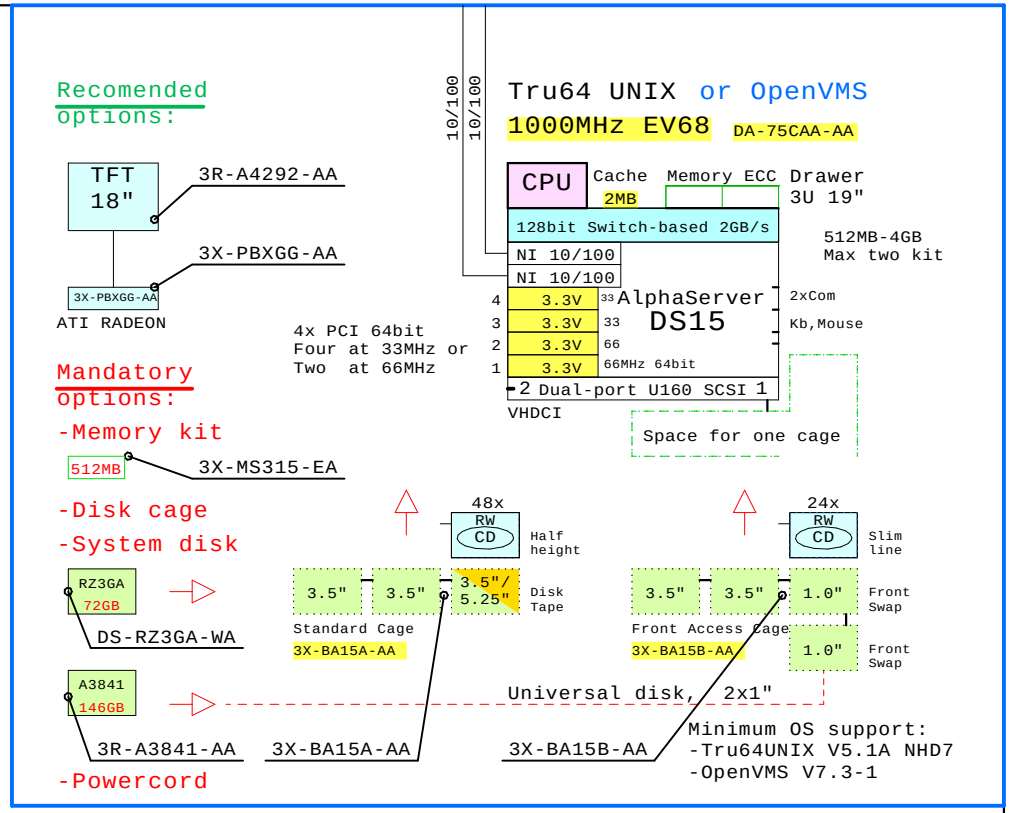

Bill of material for the OpenVMS system above

	Part Number	Qty	Description
1	DY-75CAA-AA	1	AS DS15 68/1000 0GB OVMS
1.1	3X-BA15B-AA	1	DS15 Front Access Cage 4xDisks CD
1.1.1	3R-A3841-AA	2	146GB 10000r U320 SCSI disk 1"
1.1.2	DS-RZ3GA-WA	2	72.8GB 10kRPM Ultra3 SCSI Disk
1.2	3X-DEGXA-TA	1	GigabitEthernet single-p 66MHz 3.3V
1.3	3X-KZPDC-BE	1	U160 2-Ch RAID 128MB PCI 66MHz 3.3v
1.4	3X-MS315-GA	2	DS15 2GB DIMM MEM
2	302970-B31	1	MSA30 M4354R dual buss, 7+7, 1.0"
2.1	286713-B22	5	36GB 10000r U320 disk 1"
2.2	286714-B22	4	72.8GB 10000r U320 disk 1"
3	249160-B31	1	AIT 100/200GB LVD TableTop Int. black
4	3X-BC56J-03	2	Ultra3 160 Cable VHDCI-VHDCI 12ft
5	BN19C-2E	1	PowerCable 240V, C-Europe
6	BN38C-02	1	Ultra Cbl VHDCI - 68HD

Order numbers for DS15 AlphaServers and AlphaStations

	Part Number	Qty	Description
1	DA-75CAA-AA	1	AS DS15 68/1000 0GB UNIX
2	DA-75CAA-AW	1	ASW DS15 68/1000 0GB UNIX
3	DY-75CAA-AA	1	AS DS15 68/1000 0GB OVMS
4	DY-75CAA-AW	1	ASW DS15 68/1000 0GB OVMS

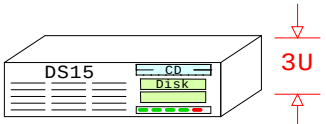

AlphaServer DS15

Options needed:
- one mouse
- one keyboard
- one powercord

3R-A4565-AA Mouse Carbon
3R-A4362-AA U.S/Engl UNIX kb
3X-LK463-A2 OVMS
BN19C-2E PowerCable C-Europe

3X-BC34A-06 Kb or Mouse ext.
BN39C-02 Video Ext.cbl
3X-BA73P-BB DS15 Floor stand

If this diagram has influenced on your purchase decision,please let us know.
Matti.Patari@Kolumbus.fi (the painter)

Software Processor Code: E
Cluster Software Code: C

For more detailed configuring, please consult the latest HP QuickSpecs.
Generated with fresh GOLDEN EGGS Software, Rev:22-Jul-2004

GOLDEN EGGS Visuals Helsinki	31-Jan-2005	GEADS15a
	Matti.Patari@Kolumbus.fi	

DS15

HP AlphaServer DS15 1000MHz EV68
GOLDEN EGGS Visuals, Helsinki