## Overview

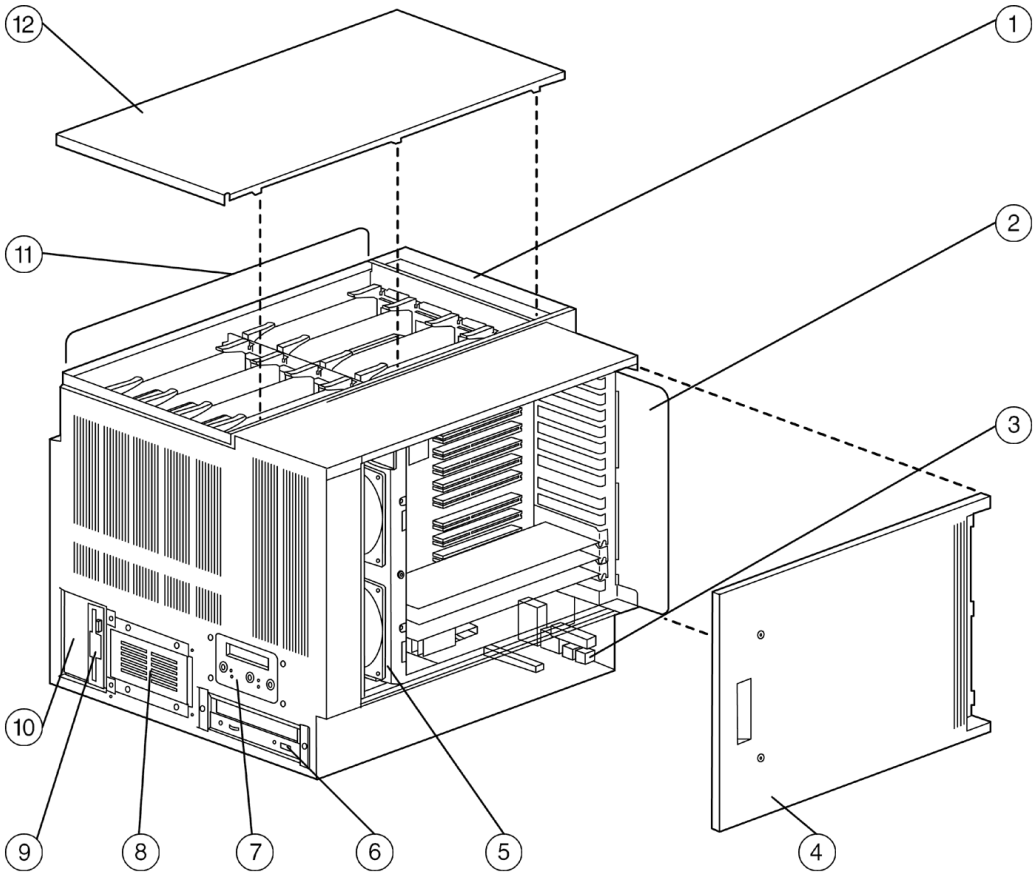


1. CPU Fan Assembly
2. PCI card cage
3. I/O port module
4. PCI access cover
5. PCI card-cage fan assembly
6. CD-ROM drive
7. Operator control panel
8. Optional hard disk drive bay
9. Floppy drive
10. Optional tape drive bay (3.5") only
11. System card cage
12. Top Cover

*Overview*

## At A Glance

- Compaq AlphaServer TS20/40 Systems include:
- Alpha 21264 68/833-MHz CPU with 8-MB L2 Dual Data Rate Cache
- 14 64-bit PCI I/O expansion slots
- 512-MB, 1-GB, 2-GB, or 4-GB memory options
- 1.44-MB diskette drive
- 600-MB 40X IDE CD-ROM drive
- Two 9-pin serial ports
- One 25-pin parallel port
- RMC dedicated serial port, 6-pin MMJ connector
- Dual USB ports
- Keyboard and mouse port
- Power supply
- AC (auto sensing)
  -48VDC (normal) or -32 to -72VDC for full range
- U.S. English keyboard with North America orders
- 3-button mouse
- Integral remote system management console
- Customer documentation
- Tru64™ UNIX™ or OpenVMS Factory Installed Software
- 90-day software warranty
- Protected by Compaq Services, including three-year hardware warranty, on-site with 5 x 9 next business day response

## Standard Features

| | | |
|---|---|---|
| **Processor** | Alpha 21264 68/833-MHz CPU | |
| **Cache Memory** | 8-MB L2 Dual Data Rate Backup Cache | |
| **Upgradability** | Supports additional processors and upgrades of memory and hard drives | |
| **Memory** | Minimum | 512 MB |
| | Maximum | 16 GB (16 DIMM slots) – AlphaServer TS20<br>32 GB (32 DIMM slots) – AlphaServer TS40 |
| **Network Controller** | Choice of Ethernet controllers | |
| **Expansion** | PCI I/O slots | 14 slots (9 primary and 5 secondary; refer to PCI Configuration Guidelines) |
| **Storage** | Diskette Drive | 1.44 MB diskette drive in dedicated slot |
| | CD-ROM | 600-MB 40X IDE CD-ROM |
| | Hard Drives | Choice of 9.1-GB, 18.2-GB, or 36.4-GB drives |
| **Interfaces** | Parallel | 1 25-pin parallel port |
| | Serial | 2 9-pin serial ports |
| | USB | Dual USB ports |
| | Keyboard | 1 |
| | Mouse | 1 |
| | Remote systems management | 1 dedicated remote systems management port |
| **Graphics** | Optional | |
| **Form Factor** | Rackmount (Standard or NEBS certified cabinet) | |
| **Power Supply** | Rackmount (Standard or NEBS certified cabinet) | |
| **Manageability** | Compaq Insight Manager | |
| **OS Support** | AlphaServer TS20/40 Tru64 UNIX systems include pre-installed software, Base license, Unlimited User license, Server Extension license, Internet Express, iPlanet Directory Server, iPlanet Enterprise Server, and Compaq Secure Web Server<br>AlphaServer TS20/40 OpenVMS systems include pre-installed software, Base license with System Manager license and Enterprise Integration Server License Package for OpenVMS V3.1<br>Minimum OS support - Tru64 UNIX V5.1A or Open VMS V7.1-2 | |

*Standard Features*

| | |
|---|---|
| Service and Support | Protected by Compaq Services including a Three-year on-site hardware warranty with next business day response. Software warranty is a 90-day telephone advisory. Training, consulting, network integration, software support, comprehensive system maintenance and guaranteed uptime services are also available for customers requiring higher levels of service and support. |

**PCI Configuration Guidelines**

- Physical slots 1 through 5 support only PCI33 Type 0 single-function PCI adapter cards that use a single PCI functional interrupt line.
- Physical slots 1 through 5 do not suport PCI33 Type 1 multifunction graphics adapters, multiport Ethernet adapters, etc.
- MEMORY CHANNEL (CCMAB-AA) PCI adapters are ONLY supported installed within physical slots 6-14.
- IPCON-AA PCI adapter (See input # 7) in physical slot 1 or 5, while a SS7 card is concurrenly installed in physical slot 5 or 1, respectively.

## Step 1 – Select system

AlphaServer TS20/40 systems require the mandatory selection of the following items:

- Disk drive cage or StorageWorks shelf (see Step 5)
  - Disk drive cage requires Ultra2 SCSI LVD (3X-KZPCA-AA)
  - StorageWorks shelf requires UltraSCSI adapter and SCSI cable (see Step 10)
- System disk drive (Step 5)
- Ethernet adapter (Step 7)
- Chassis Rackmount Kit (see Step 8) - each server includes dress bezel and two power cords
- Non-North American systems require country-specific keyboard (see Step 16); North American systems include U.S. English keyboard
- Software media and documentation for first system onsite

NOTE: Bold face part numbers indicate NEBS qualified. For system integration of options with 6-3 part numbers, contact CustomSystems. Option part numbers identified with the notation "U.S./Canada orders"and "Other country orders"refers specifically to the country where the order originates, and indicates the valid and orderable part numbers in the respective geographies.

| AlphaServer TS20 Systems | | | | | |
|---|---|---|---|---|---|
| TS20 | OS | CPU | PCI I/O Slots | Memory/Cache | Order No. |
| AC | Tru64 UNIX | 833 MHz | 14 | 512 MB/8 MB | DA-T56RA-CA |
| AC | Tru64 UNIX | 833 MHz | 14 | 1 GB/8 MB | DA-T56RA-DA |
| AC | Tru64 UNIX | 833 MHz | 14 | 2 GB/8 MB | DA-T56RA-EA |
| DC | Tru64 UNIX | 833 MHz | 14 | 512 MB/8 MB | DA-T56RB-CA |
| DC | Tru64 UNIX | 833 MHz | 14 | 1 GB/8 MB | DA-T56RB-DA |
| DC | Tru64 UNIX | 833 MHz | 14 | 2 GB/8 MB | DA-T56RB-EA |
| | | | | | |
| AC | OpenVMS | 833 MHz | 14 | 512 MB/8 MB | DY-T56RA-CA |
| AC | OpenVMS | 833 MHz | 14 | 1 GB/8 MB | DY-T56RA-DA |
| AC | OpenVMS | 833 MHz | 14 | 2 GB/8 MB | DY-T56RA-EA |
| DC | OpenVMS | 833 MHz | 14 | 512 MB/8 MB | DY-T56RB-CA |
| DC | OpenVMS | 833 MHz | 14 | 1 GB/8 MB | DY-T56RB-DA |
| DC | OpenVMS | 833 MHz | 14 | 2 GB/8 MB | DY-T56RB-EA |
| | | | | | |
| AlphaServer TS40 Systems | | | | | |
| TS40 | OS | CPU | PCI I/O Slots | Memory/Cache | Order No. |
| AC | Tru64 UNIX | 833 MHz | 14 | 512 MB/8 MB | DA-T64CA-CA |
| AC | Tru64 UNIX | 833 MHz | 14 | 1 GB/8 MB | DA-T64CA-DA |
| AC | Tru64 UNIX | 833 MHz | 14 | 2 GB/8 MB | DA-T64CA-EA |
| AC | Tru64 UNIX | 833 MHz | 14 | 4 GB/8 MB | DA-T64CA-FA |
| DC | Tru64 UNIX | 833 MHz | 14 | 512 MB/8 MB | DA-T64CB-CA |
| DC | Tru64 UNIX | 833 MHz | 14 | 1 GB/8 MB | DA-T64CB-DA |
| DC | Tru64 UNIX | 833 MHz | 14 | 2 GB/8 MB | DA-T64CB-EA |
| DC | Tru64 UNIX | 833 MHz | 14 | 4 GB/8 MB | DA-T64CB-FA |
| | | | | | |
| AC | OpenVMS | 833 MHz | 14 | 512 MB/8 MB | DY-T64CA-CA |
| AC | OpenVMS | 833 MHz | 14 | 1 GB/8 MB | DY-T64CA-DA |
| AC | OpenVMS | 833 MHz | 14 | 2 GB/8 MB | DY-T64CA-EA |
| AC | OpenVMS | 833 MHz | 14 | 4 GB/8 MB | DY-T64CA-FA |
| DC | OpenVMS | 833 MHz | 14 | 512 MB/8 MB | DY-T64CB-CA |
| DC | OpenVMS | 833 MHz | 14 | 1 GB/8 MB | DY-T64CB-DA |
| DC | OpenVMS | 833 MHz | 14 | 2 GB/8 MB | DY-T64CB-EA |
| DC | OpenVMS | 833 MHz | 14 | 4 GB/8 MB | DY-T64CB-FA |

### Step 2 - Additional CPU Modules - Optional

- AlphaServer TS20 includes one CPU, one additional CPU is supported
- AlphaServer TS40 includes one CPU, three additional CPUs are supported

| | |
|---|---|
| SMP upgrade, includes one 68/833-MHz CPU with 8-MB cache and Tru64 UNIX SMP license | KN610-CB |
| SMP upgrade, includes one 68/833-MHz CPU with 8-MB cache and OpenVMS SMP license | KN610-CC |

### Step 3 - Memory - Optional

- Systems include one memory option
- TS20 systems supports four memory options (total of 16 DIMMs)
- TS40 systems support eight memory options (total of 32 DIMMs)
- Memory performance considerations: Interleaved operations reduce the average latency and increase the memory throughput over non-interleaved operations. With one memory option (4 DIMMs) installed, memory interleaving will not occur. With two identical memory options (8 DIMMs) installed, memory read-write operations are two-way interleaved. With four identical memory options (16 DIMMs) installed, memory read-write operations are four-way interleaved, maximizing memory throughput.

| | |
|---|---|
| 512-MB memory option (4 x 128-MB DIMMs) | MS610-CA |
| 1-GB memory option (4 x 256-MB DIMMs) | MS610-DA |
| 2-GB memory option (4 x 512-MB DIMMs) | MS610-EA |
| 4-GB memory option (4 x 1024-MB DIMMs) | MS610-FA |

### Step 4 - Additional Power Supplies - Required for redundancy

- Power supply included with system provides support for full system
- Second power supply provides full redundancy
- Rack kit include two internal power cords regardless of the number of power supplies

| | |
|---|---|
| AlphaServer TS20/40 950W 120/240VAC power supply | 3X-H7820-AA |
| AlphaServer TS20/40 950W –48VDC power supply | 3X-H7820-AB |

### Step 5 - Disk Drive Cage or StorageWorks Shelf - Mandatory

- AlphaServer TS20/40 enclosure supports one 2-bay disk drive cage
- The number of Universal 42xx/43xx StorageWorks shelves or BA36R StorageWorks shelves dependd upon the selected cabinet.

### Step 5a - Disk Drive Cage - Requires selection of system disk drive

| | | |
|---|---|---|
| | Two-bay disk drive cage with cable for use with 1.0[2] universal drives – requires mandatory selection of one Ultra2 SCSI adapter (3X-KZPCA-AA)<br>NOTE: See AlphaServer TS20/40 Configuration Chart for Storage Adapters in Step 10. Bold face option part numbers indicate NEBS qualified. | BA610-2D |
| **System Disk Drives** (Supported in Disk Drive Cage) | 9.1-GB Ultra3 SCSI 10,000 rpm 1.0" Universal disk drive | 3R-A0584-AA |
| | 9.1-GB Ultra3 SCSI 15,000 rpm 1.0" Universal disk drive | 3R-A1542-AA |
| | 18.2-GB Ultra3 SCSI 10,000 rpm 1.0" Universal disk drive | 3R-A0585-AA |
| | 18.2-GB Ultra3 SCSI 15,000 rpm 1.0" Universal disk drive | 3R-A1543-AA |
| | 36.4-GB Ultra3 SCSI 10,000 rpm 1.0" Universal disk drive | 3R-A0919-AA |
| | 36.4-GB Ultra3 SCSI 15,000 rpm 1.0" Universal disk drive | 3R-A3079-AA |
| | 72.8-GB Ultra3 SCSI 10,000 rpm 1.0" Universal disk drive | 3R-A3050-AA |

### Step 5b - StorageWorks Model 4314R and Model 4354R Universal Drive Shelves

#### StorageWorks Model 4314R Shelves

StorageWorks Model 4314R and 4354R Ultra2 SCSI (LVD) single-bus and split-bus Universal drive shelves; refer to Compaq StorageWorks Enclosure 4300 Family QuickSpecs when configuring shelves. When selecting a DS-SSL13-Rx split-bus shelf, order two **3X-KZPCA-AA** adapters with BN38C-05 cables. Model 43xx shelves are compatible with Wide Ultra2 (LVD) adapters only. Note that the depth of a DS-SL13R-xx shelf does not allow front and rear mounting (Universal shelves require onsite installation).

| | | |
|---|---|---|
| | StorageWorks Model 4314R Ultra3 SCSI (LVD) single-bus Universal drive rackmount shelf, includes one power supply, U.S. (190209-001) | DS-SL13R-AA |
| | StorageWorks Model 4314R Ultra3 SCSI (LVD) single-bus Universal drive rackmount shelf, includes one power supply, Japan | 190209-291 (U.S./Canada orders)<br>DS-SL13R-AJ (Other country orders) |
| | StorageWorks Model 4314R Ultra3 SCSI (LVD) single-bus, -48VDC, rackmount shelf, includes two redundant power supplies, dress bezel and two DC power cords | 3X-SL13R-TA |
| **StorageWorks Model 4354R Shelves** | StorageWorks Model 4354R Ultra3 SCSI (LVD) single-bus Universal drive rackmount shelf, includes two redundant power supplies, U.S. (190211-001) | DS-SL13R-BA |
| | StorageWorks Model 4354R Ultra3 SCSI (LVD) split-bus Universal drive rackmount shelf, includes two redundant power supplies, Japan | 190211-291 (U.S./ Canada orders)<br>DS-SL13R-BJ (Other country orders) |
| | StorageWorks Model 4354R Ultra3 SCSI (LVD) split-bus, -48VDC, rackmount shelf, includes two redundant power supplies, dress bezel and two DC power cords | 3X-SL13R-TB |

*Options*

| | | |
|---|---|---|
| **Additional Power Supplies** | Additional power supply for single-bus Universal shelf, U.S. | 212980-B21 (U.S./Canada orders)<br>DS-SE2UP-AA (Other country orders) |
| | Additional power supply for single-bus Universal shelf, International | 119826-B31 (U.S./Canada orders)<br>DS-SE2UP-AI (Other country orders) |
| | NOTE: Model 4314R shelf with DS-KZPCC-AC adapter does not support a disk drive in last slot.<br>Bold face part numbers indicate NEBS qualified. | |
| **System Disk Drives** (Supported in Model 4314Rand Model 4354R Universal Drive Shelves) | 9.1-GB Ultra3 SCSI 10,000 rpm 1.0" Universal disk drive | 3R-A0584-AA |
| | 9.1-GB Ultra3 SCSI 15,000 rpm 1.0" Universal disk drive | 3R-A1542-AA |
| | 18.2-GB Ultra3 SCSI 10,000 rpm 1.0" Universal disk drive | 3R-A0585-AA |
| | 18.2-GB Ultra3 SCSI 15,000 rpm 1.0" Universal disk drive | 3R-A1543-AA |
| | 36.4-GB Ultra3 SCSI 10,000 rpm 1.0" Universal disk drive | 3R-A0919-AA |
| | 36.4-GB Ultra3 SCSI 15,000 rpm 1.0" Universal disk drive | 3R-A3079-AA |
| | 72.8-GB Ultra3 SCSI 10,000 rpm 1.0" Universal disk drive | 3R-A3050-AA |
| **StorageWorks Model 4314T Standalone Enclosures** | Model 4314T Ultra3 SCSI, Single-bus Tower Enclosure, U.S. | 190210-001 (U.S./Canada orders)<br>DS-SL13T-AA (Other country orders) |
| | Model 4314T Ultra3 SCSI, Single-bus Tower Enclosure, International | (190210-B31 (U.S./Canada orders)<br>DS-SL13T-AB (Other country orders) |
| | Model 4314T Ultra3 SCSI, Single-bus Tower Enclosure, Japan | 190210-291 (U.S./Canada orders)<br>DS-SL13T-AJ (Other country orders) |

**Step 5c – StorageWorks BA36R Shelf** - Requires selection of UltraSCSI adapter and SCSI cable (Step 10) and system disk drive

- StorageWorks Shelf supports seven 3.5 x 1.6 hard disk drives; with addition of redundant power supply, only six drives are supported
- StorageWorks shelf kits are mounted back-to-back in cabinets

| | |
|---|---|
| StorageWorks UltraSCSI single-bus shelf kit | BA36R-RC |
| StorageWorks UltraSCSI split-bus shelf kit | BA36R-RD |
| 3-meter SCSI cable | BN37A-03 |

| | | |
|---|---|---|
| **System Disk Drives** (Supported in StorageWorks BA36R Shelf) | 9.1-GB Ultra2 SCSI 7,200 rpm disk drive | DS-RZ1DA-VW |
| | 9.1-GB Ultra3 SCSI 10,000 rpm disk drive | DS-RZ1DD-VW |
| | 18.2-GB Ultra2 SCSI 7,200 rpm disk drive | DS-RZ1EA-VW |
| | 18.2-GB Ultra3 SCSI 10,000 rpm disk drive | DS-RZ1ED-VW |
| | 36.4-GB Ultra3 SCSI 10,000 rpm disk drive | DS-RZ1FC-VW |

## Step 6 - Internal Removable Media - Optional

- System supports three internal removable devices
- System includes 1.44-MB diskette drive
- System includes 5.25 "half-height 600-MB 40X IDE CD-ROM drive
- Removable media slot provide support for one 3.50"AIT, or one 3.50[2] DAT tape drive media device

| | |
|---|---|
| 3.50" 20/40-GB 4 mm DAT Ultra2 (LVD) SCSI tape drive, graphite black; requires Ultra2 (LVD) adapter (3X-KZPCA-AA) | 3X-SD15X-AA |
| 3.50" 50/100-GB 8 mm AIT Ultra2 (LVD) SCSI tape drive, graphite black; requires Ultra2 (LVD) adapter (3X-KZPCA-AA) | 3X-SZ15X-AA |

NOTE: Bold face part numbers indicate NEBS qualified. 3.5"AIT and DAT tapes can only be used with AlphaServer TS20/40.

## Step 7 - Ethernet Adapters - Mandatory

- Adapters require a minimum of Tru64 UNIX V5.1A or OpenVMS V7.1-2
- Each adapter uses one PCI slot
- See Step 12 for additional networking options

NOTE: Ethernet adapter is not required if KZPCM or 3X-DEPVZ-AA is selected as SCSI adapter for StorageWorks shelf

*Options*

| | Maximum # Supported | | |
|---|---|---|---|
| | Tru64 UNIX | OpenVMS | |
| PCI 1-port 32-bit 10/100-Mb single-channel UTP FE Ethernet adapter (Twisted Pair) | 4 | 4 | 3X-DE600-AA |
| PCI to dual-port 10/100 UTP Fast Ethernet adapter (supported under Tru64 UNIX V4.0F and TruClusteä r V1.6) | 2 | 4 | 3X-DE602-AA |
| PCI single-port MMF add-on daughter card for 3X-DE602-AA (supported under Tru64 UNIX V4.0F and TruCluster V1.6) | 2 | 2 | 3X-DE602-FA |
| PCI 4-port 10/100 Mb Ethernet adapter | 1 | 1 | DE504-BA |
| PCI Combo adapter, includes 10/100 Mbps Ethernet adapter, Ultra2 LVD SCSI adapter, and 2D graphics adapter, no support for multi-head graphics requires OpenVMS V7.1-2 with:<br>DEC-AXPVMS-VMS712_UPDATE-V0300—4.PCSI<br>DEC-AXPVMS-VMS712_GRAPHICS-V0300—4.PCSI<br>DEC-AXPVMS-DNVOSIECO06-V0701—4.PCSI is recommended<br>OpenVMS V7.2-1 requires Tima kit:<br>DEC-AXPVMS-VMS&@!_UPDATE-V0100--4.PCSI<br>Requires Tru64 UNIX V4.0F with NHD2; TruCluster V5.1 support restricted to non-shared buses<br>Tru64 UNIX V5.1 requires Patch Kit 3: T64V51AS0003-20010413.tar | 1 | 1 | 3X-DEPVZ-AA |
| Cable for 10BaseT Twisted Pair connection | | | BN25G-xx |
| 3-meter SCSI cable | | | BN37A-03 |
| PCI Gigabit Ethernet adapter, SC connectors, MMF - no boot support | 4 | 4 | DEGPA-SA |
| PCI 10/200/1000 UTP Ethernet adapter; requires minimum version Tru64 UNIX V5.0A, Patch kit 2: T64V50AAS0002-20001004.tar | 4 | 4 | DEGPA-TA |
| SC-SC dual Fibre Optic cable, mm, pp xx = length in meters | | | BN34B-xx |

NOTE: Bold face option part numbers indicate NEBS qualified.

### Step 8 - System Enclosures - Chassis Rackmount Kit

### Step 8a - Chassis Rackmount Kit for NEBS or Standard Cabinet (Non-NEBS)

- Chassis Slide Kit included for each AlphaServer TS20/40 system
- Each Chassis Rackmount Kit supports one system

| | |
|---|---|
| Chassis Rackmount Kit for Standard Cabinet | 3X-BA61R-SC |
| Chassis Rackmount Kit for NEBS Cabinet | 3X-BA61R-NC |

### Step 9 - Cabinets (Standard and NEBS)

NOTE: Contact Compaq CustomSystems for for any cabinet configurations with AlphaServer TS20/40.

- Cabinet enclosures require selection of the following items:
- H9A10 (34U) or H9A15 (41) or NEBS cabinet
- Power Distribution Unit (PDU); One PDU is included in NEBS cabinet
- Rear cabinet extender based on cabinet height (H9A10 and H9A15)
- Cabinet front door based on cabinet height (H9A10 and H9A15)
- Factory integration
- Ballast kit if only one system is ordered for the H9A15 cabinet
- Japan only – 240V cabinet required when using universal shelves (For H9A10 and H9A15 cabinet)
- Installation of one AlphaServer TS20/40 system in an H9A15 cabinet requires the mandatory selection of a ballast kit for H9A10 and H9A15 cabinet)

## Options

| | | |
|---|---|---|
| **General Cabinet Description** | 67-inch cabinet with 56-inchor 32U of usable vertical space, 120V dual-24A controller, each with 10 NEMA 5-15R outlets, input power plug NEMA L5-30P, Americas, Asia Pacific; includes rear door and top fan tray | H9A10-ZB |
| | 79-inch cabinet with 68.25-inch or 39U of usable vertical space, 5-15R outlets, input power plug NEMA L5-30P, Americas, Asia Pacific; includes rear door and top fan tray | H9A15-ZB |
| | 76-inch cabinet with 70-inch or 38U of usable vertical space, 1900 mm x 600 mm x 600 mm seismic electronic enclosure, 19-inch RETMA mounting rails with non-threaded holes; color Carbon Black; includes rear door and one –48V PDU (3X-H7603-AB) | 3X-H9705-AB |
| | 70-inch cabinet with 65-inch or 35U of usable vertical space, 1800 mm x 600 mm x 600 mm seismic electronic enclosure, 19-inch RETMA mounting rails with non-threaded holes; color Carbon Black; includes rear door and one –48V PDU (3X-H7603-AB) | 3X-H9705-BB |
| **Rear Cabinet Extender** - Optional | Rear cabinet extender, graphite black, for H9A10-ZB cabinets | H9C10-ZE |
| | Rear cabinet extender, graphite black, for H9A15-ZB cabinets | H9C15-ZE |
| **Front Trim Kit** – Required selection of either Front Door Kit or Front Trim Kit | Front trim kit, graphite black, for H9A10-ZE cabinet enclosure | H9C10-ZT |
| | Front trim kit, graphite black, for H9A15-ZE cabinet enclosure | H9C15-ZT |
| **Cabinet Front Door** - Required selection of either Front Door Kit or Front Trim Kit | Front door, graphite black, for H9A10-ZE cabinet enclosure | H9C10-ZF |
| | Front door, graphite black, for H9A15-ZE cabinet enclosure | H9C15-ZF |
| **Factory Integration** - Required | Factory Integration of systems and storage devices assembled and configured in cabinet enclosure in predefined locations | YT-CSSIT-01 |
| **Ballast Kit** - Required only if one system is ordered for the H9A15 cabinet | Ballast is added to a cabinet at particular locations for specific configurations to meet safety regulations for installation, operation, and service; see Cabinet Configuration Charts. | |
| | Two 35 to 40 lb/16 to 18 kg steel plates | H9C10-MC |
| **Power Distribution Unit** (PDU) – For standard cabinet | PDU, NEMA Input, NEMA Outlets, 120V | H7600-AA |
| | PDU, NEMA Input, NEMA Outlets, 240V | H7600-AB |
| **Power Distribution Unit** (PDU) – For NEBS cabinet | Two sections, -48V PDU contains two removable modules rated for 120A. 2U configuration for standard 19.0-inch rackmount and convection cooler. The 48VDC input voltage is distributed to eight separate output connectors | 3X-H7603-AB |

Step 10 - Storage Adapters/Controllers

NOTE: Refer to the following chart when configuring adapters, shelves, and disks.

| AlphaServer TS20/40 Configuration Chart for Storage Adapters | | | | |
|---|---|---|---|---|
| Adapter | Shelf | Disk Drive | Tru64 UNIX | OpenVMS |
| | | External RAID | | |
| | DS-SL13R-xx | 3R-A3xxx-AA 1.0"Universal | V4.0F – V5.1 | |
| | | Internal RAID | | |
| DS-KZPCC-AC/CE1 | BA610-2D (internal RAID)2 | 3R-A3xxx-AA 1.0" Universal | V5.1/5.1A | |
| 3X-KZPCA-AA | BA610-2D<br>DS-SSL14-Rx<br>DS-SL13R-xx<br>3X-SL13R-TA<br>3X-SL13R-TB | 3R-A0xxx-AA 1.0" Universal<br>3R-A1xxx-AA 1.0" Universal<br>3R-A1xxx-AA 1.0" Universal<br>3R-A0xxx-AA 1.0" Universal<br>3R-A0xxx-AA 1.0" Universal | V4.0F to V5.1 | V7.2-1 |
| 3X-DEPVZ-AA | DS-SL13R-xx<br>3X-SL13R-TA<br>3x-SL13R-TB | 3R-A1xxx-AA 1.0" Universal<br>3R-A0xxx-AA 1.0" Universal<br>3R-A0xxx-AA 1.0" Universal | V4.0F with NHD2 | V7.2-1 |
| KZPCM-DA | BA36R-xx | DS-RZ1xx-VW, DS-EZxxx-VW | V4.0F to V5.1 | V7.2-1 |
| KZPBA-CA | BA36R-xx | DS-RZ1xx-VW, DS-EZxxx-VW | V4.0F to V5.1 | V7.2-1 |
| NOTE: Ethernet adapter is not required if 3X-DEPVZ-AA or KZPCM-DA is selected as SCSI adapter for StorageWorks shelf. | | | | |
| RAID Controllers | | | | |
| Adapters | Shelf | Disk Drive | Tru64 UNIX | OpenVMS |
| KZPAC-AA/CA/CB | BA36R-xx | DS-RZ1xx-VW | V4.0F to V5.1 | V7.2-1 |
| DS-KZPCC-CE/AC | BA36R-xx* | 3R-A0xxx-AA 1.0" Universal<br>3R-A1xxx-AA 1.0" Universal | V4.0F only | - |
| | | | | |

NOTE: * = BA36R-xx shelves require DOC2 I/O module, DS-BA35X-FC; order DS-BA35X-FC as an independent option (will not be factory installed).

1. DS-KZPCC-AC/CE RAID controllers can be used with universal shelves and drives in TS20/40. Configuration rules are restricted to specific CPU and OS versions:
2. - Tru64 UNIX V5.1 requires Patch Kit 3 (BL17) and Early Release Patch C462.02
   Only BA610-2D cage (with Nile Cards Rev –0B) shipped after 1 October 2001 supports internal RAID. Contact Customer Services to replace Nile Cards shipped in BA610-2D disk card cage prior to 1 October 2001 where internal RAID is required.

*Options*

| | Maximum # Supported | | |
|---|---|---|---|
| | Tru64 UNIX | OpenVMS | |
| PCI 2-port PCI to Ultra3, 64-bit LVD2 SCSI adapter, uses one PCI slot; Includes internal 68-pin and external 68-pin HD connectors; requires BN38C-xx cable to connect adapter to Universal shelf; supports shared JBOD using Models 4314R and 4354R Universal shelves; support restricted to EV68 833-MHz systems only and Tru64 UNIX V5.1A as a minimum. | 4 | - | 3X-KZPEA-DB |
| PCI 3-port PCI to Ultra2, 64-bit, LVD backplane RAID controller with 64-MB cache (uses one PCI slot); requires connection to DS-SSL14-Rx (maximum seven disks supported per channel) or to DS-SL13R-xx (maximum 14 disks with single channel) | 8 | - | DS-KZPCC-CE |
| PCI 1-port PCI to Ultra2, 64-bit, LVD backplane RAID controller with 16-MB cache (uses one PCI slot); requires connection to DS-SSI14Rx (maximum seven disks supported per channel) or to DS-SL13R-xx (maximum 14 disks with single channel) | 8 | - | DS-KZPCC-AC |
| PCI to Fibre Channel adapter, 64-bit, single-channel (uses one PCI slot)<br>NOTE: When used in a switched standalone or cluster environment, a maximum of four adapters is supported. When used in an arbitrated loop non-clustered environment, a maximum of one adapter is supported. | See NOTE | See NOTE | DS-KGPSA-CA (168794-B21) |
| Fibre Channel cable (BNGBX-xx) xx = 02, 05, 15, 30, 50 meters,<br>x = 1 (02 m), 2 (05 m), 3 (15 m), 4 (30 m), 5 (50 m) | | | 234457-B2x |
| | | | |
| PCI 1-port Ultra2 (LVD) SCSI adapter, 32-bit, single-channel (uses one PCI slot); includes internal 68-pin and external 68-pin HD connectors; requires BN38C-xx cable to connect adapter to Ultra2 shelf; HSZxx RAID controllers not supported. OpenVMS V7.1-2 requires Tima Kit: DEC-AXPVMS-VMS712_UPDATE-V0300—4.PCSI; Tru64 UNIX V4.0F requires Patch Kit2 BL13: DUV40FAS0002-19991116.tar | 6 | 6 | 3X-KZPCA-AA |
| 68-pin HD male-to-VHDCI male UltraSCSI cable;<br>xx = 02, 03, 05, 10, 20, 25 m | | | BN38C-xx |
| PCI combo adapter – See Step 7 | 1 | 1 | 3X-DEPVZ-AA |
| PCI 2-port UltraSCSI single-ended adapter and 10/100 Mb Ethernet combo adapter (uses one PCI slot); includes internal 68-pin and 50-pin HD connectors and two external 68-pin VHDCI SCSI connectors, requires BN37A-xx cable to connect to single-ended UltraSCSI shelf | 4 | 4 | KZPCM-DA |
| VHDCI male-to-VHDCI male UltraSCSI cable,<br>xx = 02, 2E [2.5], 03, 05, 10, 20 m | | | BN37A-xx |
| | | | |
| PCI 1-port UltraSCSI differential adapter (uses one PCI slot); includes external 68-pin HD connector, requires BN38C-xx cable (2 to 25 m) to connect adapter to differential UltraSCSI shelf or RAID controller | 5 | 5 | KZPBA-CB |
| 68-pin HD male-to-VHDCI male UltraSCSI cable;<br>xx = 02, 03, 05, 10, 20, 25 m | | | BN38C-xx |
| | | | |
| PCI 1-port UltraSCSI RAID controller with 4-MB cache memory (uses one PCI slot), includes RAID Array 230/Plus Subsystem software and documentation kit; includes VHDCI female connector; tape drives not supported; 18.2-GB disk drives not supported, requires BN37A-xx cable (0.3 to 20 m) to connect to single-ended UltraSCSI shelf | 4 | 4 | KZPAC-AA |
| | | | |

*Options*

| | | | |
|---|---|---|---|
| PCI 3-port UltraSCSI RAID controller with 4-MB cache memory (uses one PCI slot), includes RAID Array 230/Plus Subsystem Software and documentation kit; tape drives not supported; 18.2-GB disk drives not supported; SCSI cable required for each active port; requires BN37X-xx cable (.3 to 20 m) to connect to single-ended UltraSCSI shelf, and BN31K-0E for external third port connection | 4 | 4 | KZPAC-CA |
| Same as KZPAC-CA with 8-MB cache memory | 4 | 4 | KZPAC-CB |
| Cache battery backup for KZPAC controller | | | KZPSC-UB |
| VHDCI male-to-VHDCI male UltraSCSI cable;<br>xx = 02, 2E [2.5], 03, 05, 10, 20, 25 m<br>NOTE: Manufacturing may substitute BN37A-02 cable for specific cabinet configurations. | | | BN37A-xx |
| SCSI cable/bulkhead assembly kit, supports one third-port connection from KZPAC-CA/CB, allows external connection of one third port | | | BN31K-0E |
| SCSI cable/bulkhead assembly kit, supports two third-port connections from KZPAC-CA/CB, allows external connection of two third ports | | | KZPAC-SB |
| | | | |
| PCI CI adapter for OpenVMS systems only; requires two PCI slots and CI cable for each adapter | - | 2 | CIPCA-BA |
| CI cable | | | BNCIA-xx |
| | | | |
| PCI DSSI controller for OpenVMS systems only; requires HSDxx controller to connect directly to StorageWorks shelf; requires BC29S-xx cable | - | 4 | KFPSA-AA |
| 6' DSSI cable for connection to HSD10 installed in BA36R pedestal shelf | | | BC29S-06 |
| 9' DSSI cable for connection to HSD10 installed in BA36R cabinet shelf | | | BC29S-09 |

## Step 11 - Storage Devices - Optional

### UltraSCSI Configuration Rules

- UltraSCSI configurations require UltraSCSI components (controllers, adapters, shelves, disks, and cables)
- UltraSCSI adapters and RAID controllers support UltraSCSI disks at UltraSCSI speeds in UltraSCSI top gun blue shelves (DS-BA356-xx)
- UltraSCSI and Fast10 drives can be mixed in DS-BA356 top gun blue UltraSCSI shelf; UltraSCSI adapter negotiates maximum transfer speed of drives

### UltraSCSI StorageWorks Pedestals

- UltraSCSI top gun blue pedestals provide support for UltraSCSI disk drives; pedestals are available in single-bus or split-bus configurations and include a personality module and 180W power supply
- UltraSCSI shelf supports: seven 3.5" hard disk drives, or one 5.25" device and four 3.5" hard disk drives, or two 5.25" devices and one 3.5" hard disk drive
- Installation of redundant power supply reduces number of 3.5" drive slots by one

| | |
|---|---|
| UltraSCSI single-ended pedestal, single-bus personality module, 180W power supply | DS-BA356-KF |
| UltraSCSI single-ended pedestal, split-bus personality module, 180W power supply | DS-BA356-KG |
| UltraSCSI pedestal, single-channel differential personality module, 180W power supply | DS-BA356-KH |
| 180W power supply, includes 120V North American and 240V IEC power cord | DS-BA35X-HH |

### Tape Drives

- Tape drives require single-ended UltraSCSI adapter and country-specific power cord
- For more information on Compaq tape drives, see http://www.compaq.com/products/storageworks/sitemap.html - tapedrives
  NOTE: This Web site is available in English only.

## Options

| | | |
|---|---|---|
| **AIT Tape Drives** | 35/70-GB 8 mm AIT LVD tabletop tape drive, North America; requires 3X-KZPCA-AA LVD adapter | 216885-001 |
| | 35/70-GB 8 mm AIT LVD tabletop tape drive, International; requires 3X-KZPCA-AA LVD adapter | 216885-B31 |
| | 35/70-GB 8 mm AIT LVD tabletop tape drive, Japan; requires 3X-KZPCA-AA LVD adapter | 216885-291 |
| | 35/70-GB 8 mm AIT SCSI tabletop tape drive with 120V North American power cord; requires 3X-KZPCA-AA or KZPBA-CA SCSI adapter | 388507-001 |
| | 35/70-GB 8 mm AIT SCSI tabletop tape drive, International; requires 3X-KZPCA-AA or KZPBA-CA SCSI adapter | 388507-B31 |
| | 50/100-GB 8 mm AIT SCSI tabletop tape drive with 120V North American power cord; requires 3X-KZPCA-AA Wide Ultra2 (LVD) adapter | 157767-001 |
| | 50/100-GB 8 mm AIT SCSI tabletop tape drive, International; requires 3X-KZPCA-AA Wide Ultra2 (LVD) adapter | 157767-B31 |
| | 35/70-GB AIT hot plug LVD Universal tape drive, uses two slots in BA610-2D or 43xxx shelves | 3R-A2396-AA |
| | 50/100-GB AIT hot plug LVD Universal tape drive, uses two slots in BA610-2D or 43xxx shelves | 3R-A2779-AA |
| **AIT Tape Libraries** | SSL2020 AIT library with one AIT 50-GB drive and 20 slots, rackmount, requires 3X-KZPCA-AA | 175196-B21 |
| | SSL2020 AIT library with two AIT 50-GB drives and 20 slots, rackmunt, requires 3X-KZPCA-AA | 175196-B22 |
| | Tabletop SSL2020 AIT library with one AIT 50-GB drive and 20 slots requires 3X-KZPCA-AA LVD adapter | 175196-B21 |
| | Tabletop SSI2020 AIT library with two AIT 50-GB drives and 20 slots, requires 3X-KZPCA-AA LVD adapter | 175196-B22 |
| **DAT Tape Drives** | 12/24-GB 4 mm DAT narrow single-ended tabletop SCSI tape drive with 120V North American power cord; requires BN31W-xx SCSI cable and KZPBA-CA or KZPCM-DA adapter | DS-TLZ10-DB |
| | 20/40-GB 4 mm DAT Wide Ultra2 (LVD) tabletop SCSI tape drive with 120V North American power cord; requires 3X-KZPCA-AA Wide Ultra2 (LVD) adapter | 157770-001 |
| | 20/40-GB 4 mm DAT Wide Ultra2 (LVD) tabletop SCSI tape drive, International; requires 3X-KZPCA-AA Wide Ultra2 (LVD) adapter | 157770-B31 |
| | 20/40-GB DAT auto loader external, North America | 166505-001 |
| | 20/40-GB DAT auto loader external, International; requires BN31W-xx SCSI cable and KZPBA-CA or KZPCM-DA adapter | 166505-B31 |
| | 20/40-GB DAT auto loader external, Japan | 166505-291 |
| | 20/40-GB DAT DDS4 hot plug LVD Universal tape drive, uses two slots in BA610-2D or 43xxx shelves | 3R-A2780-AA |
| **DLT Tape Drives** | 35/70-GB DLT single-ended tabletop tape drive, requires BN21K-xx SCSI cable and KZPBA-CA or KZPCM-DA adapter | DS-TZ89N-TA |
| | Tabletop TL881 DLT mini-library with one DLT4000 tape drive; requires HVD KZPBA-CB adapter and SCSI cable | 128667-B21 |
| | Tabletop TL881 DLT mini-library with two DLT4000 tape drives; requires HVD KZPBA-CB adapter and SCSI cable | 128667-B22 |
| | Tabletop TL891 DLT mini-library with one TZ89N tape drive; requires HVD KZPBA-CB adapter and SCSI cable | 120875-B21 |
| | Tabletop TL891 DLT mini-library with two TZ89N tape drives; requires HVD KZPBA-CB adapter and SCSI cable | 120875-B22 |
| | Tabletop DLT8000 40/80-GB DLT external tape drive; requires 3X-KZPCA-AA LVD adapter | 146197-B21 |
| | Tabletop DLT8000 40/80-GB DLT external tape drive, Japan; requires 3X-KZPCA-AA LVD adapter | 146197-291 |

## Options

**Removable Media Devices for StorageWorks Shelves**

- For maximum performance, tape libraries must be configured with Fast Wide Differential (FWD) controllers for tape backup
- For more information on Compaq tape drives, see http://www.compaq.com/products/storageworks/sitemap.html - tapedrives
  NOTE: This Web site is available in English only.

| | | |
|---|---|---|
| **AIT Tape Drives** | 35/70-GB 8 mm AIT SCSI tape drive in 3.5" StorageWorks carrier (BA36R or BA356 shelves) | DS-AIT35-VW |
| | SSL2020 AIT library with one AIT 50-GB drive and 20 slots, rackmount, LVD (Universal shelves) | 175196-B21 |
| | SSL2020 AIT library with two AIT 50-GB drives and 20 slots, rackmount, LVD (Universal shelves) | 175196-B22 |
| **DAT Tape Drives** | 12/24-GB 4 mm DAT narrow SCSI tape drive in StorageWorks carrier (BA36R or BA356 shelves) | DS-TLZ10-VA |
| **DLT Tape Drives** | 40/80-GB DLT8000 tape drive in StorageWorks carrier (BA36R or BA356 shelves) | DS-TZ90N-VW |
| | 20/40-GB DLT single-ended tape drive in StorageWorks carrier (BA36R or BA356 shelves) | TZ88N-VA |
| | 35/70-GB DLT single-ended tape drive in StorageWorks carrier (BA36R or BA356 shelves) | DS-TZ89N-VW |
| | DLT mini-library expansion unit with bar code reader, 16 cartridges, wide differential SCSI robotic controller with 68-pin HD female SCSI connector, universal mounting rails (Metric/RETMA) | DS-TL890-NE |
| **DLT Tape Libraries** | MSL5026DLX or MSL5026SI, DLT/SDL tabletop library, 0 drives; all MSL 5026 libraries are supported with 3X-DEPVZ-AA and 3X-KZPCA-AA adapters | 231838-B21 |
| | MSL5026DLX, DLT tabletop library with one 40/80-GB DLT tape drive, LVD | 231821-B21 |
| | MSL5026DLX, DLT tabletop library with two 40/80-GB DLT tape drive, LVD | 231821-B22 |
| | MSL5026DLX or MSL5026SL, DLT/SDLT rackmount library, 0 drives | 231979-B21 |
| | MSL5026DLX, DLT rackmount library with one 40/80-GB DLT tape drives, LVD | 231891-B21 |
| | MSL5026DLX, DLT rackmount library with two 40/80-GB DLT tape drives, LVD | 231891-B22 |
| | MSL5026SL, SDLT tabletop library with one 110/220-GB SDLT tape drive, LVD | 231822-B21 |
| | MSL5026SL, SDLT tabletop library with two 110/220-GB SDLT tape drive, LVD | 231822-B22 |
| | MSL5026SL, SDLT rackmount library with one 110/220-GB DLT tape drives, LVD | 231892-B21 |
| | MSL5026SL, SDLT rackmount library with two 110/220-GB DLT tape drives, LVD | 2311892-B22 |
| | ESL198 DLX Enterprise tape libraries with two 40/80-GB tape drives (161265-B24/-B25/-B26/-B27/-28 for 8, 10, 12, 14, or 16 tape drives); requires KZPBA-CB | 194993-B22 |
| | TL891DLX DLT tabletop library with one DLT tape drive, LVD | 157300-B21 |
| | TL891DLX DLT tabletop library with two DLT tape drive, LVD | 157300-B22 |
| | TL891DLX DLT rackmount library with one DLT tape drive, LVD | 157305-B21 |
| | TL891DLX DLT rackmount library with two DLT tape drive, LVD | 157305-B22 |
| | Rackmount TL881 DLT mini-library with one DLT4000 tape drive; requires KZPBA-CB adapter | 128668-B21 |
| | Rackmount TL881 DLT mini-library with on DLT4000 tape drive; requires KZPBA-CB adapter | 128668-B22 |

**BA370 Rackmount Enclosure**

- Mandatory rear cabinet extender ordered for systems installed in M-series cabinets (H9A10 and H9A15) allows two BA370 enclosures to be installed front to back in cabinet
- Host adapter, RAID Array controller, ACS firmware, cache battery, cables, platform-specific Solutions Software Kit, and disk drives must be ordered separately

| | |
|---|---|
| BA370 front mount rackmount enclosure with five 180W power supplies, includes RETMA rackmount kit; first BA370 enclosure must be front mounted in cabinet, 20U height | 2T-BA370-AS |
| BA370 rear mount rackmount enclosure with five 180W power supplies, includes RETMA rackmount kit; second BA370 enclosure must be rear mounted in cabinet, 20U height | 2T-BA370-AR |

## Options

| | | |
|---|---|---|
| **External Storage Solutions/Controllers** | Modular Array 8000 Fibre Channel RAID storage solution, 60 Hz; includes one HSG80 controller with 256-MB cache, one M2200 controller shelf, three dual-bus disk shelves, two I/O ports, two power supplies | 175992-B21<br>DS-SWXEB-CA |
| | Modular Array 8000 Fibre Channel RAID storage solution, 50 Hz; includes one HSG80 controller with 256-MB cache, one M2200 controller shelf, three dual-bus disk shelves, two I/O ports, two power supplies | 175992-B22<br>DS-SWXEB-CB |
| | Enterprise Modular Array 12000 Fibre Channel RAID storage solution, 60 Hz | 175993-B21 |
| | Enterprise Modular Array 12000 Fibre Channel RAID storage solution, 50 Hz | 175993-B22 |
| | NOTE: For Modular Array 8000, and Enterprise Modular Array 12000 configuration and ordering information, see http://www.compaq.com/products/storageworks/raidstoragesystems.html<br>NOTE: This Web site is available in English only. | |
| | Fibre Channel controller (HSG80), includes 64-MB cache; each HSG80 requires 128697-B21 HSG80 ACS V8.4F software kit for RAID Array and Enterprise Storage Array solutions | 380671-B21 |
| | Fibre Channel controller (HSG80), includes 256-MB cache; each HSG80 requires 128697-B21 HSG80 ACS V8.4F software kit for RAID Array and Enterprise Storage Array solutions | 380672-B21 |
| | UltraSCSI controller (HSZ80), includes 64-MB cache; requires 400569-001 for Tru64 UNIX or 400571-001 for OpenVMS for RAID Array and Enterprise Storage Array solutions | 400564-B21 |
| | UltraSCSI controller (HSZ80), includes 256-MB cache; requires 400569-001 for Tru64 UNIX or 400571-001 for OpenVMS for RAID Array and Enterprise Storage Array solutions | 400565-B21 |

**RA3000 RAID Array**

- RAID Array 3000 (HSZ22) storage array is supported on AlphaServer TS20/40 systems (Tru64 UNIX V4.0F, V5.0A or higher and OpenVMS V7.x); supports KZPBA-CB adapter, minimum console V5.8
- For ordering information see:
  http://www.compaq.com/products/storageworks/raidstorage/RA3000ped_config.html
  NOTE: This Web site is available in English only.

**RA8000, ESA12000 Ultra and RA8000, ESA12000 Fibre Channel**

- RAID Array 8000 and ESA 12000 (HSZ80) storage arrays are supported on AlphaServer TS20/40 systems
- RAID Array 8000 FC and ESA 12000 FC (HSG80) storage arrays are supported on AlphaServer TS20/40 systems
- For ordering information see:
  http://www.compaq.com/products/storageworks/raidstoragesystems.html
  NOTE: This Web site is available in English only.

### Step 12 - Networking Adapters/Controllers - Optional

- Adapters require a minimum of Tru64 UNIX V4.0F or OpenVMS V7.1-2
- Each adapter/controller uses one PCI slot
- See Step 7 for supported Ethernet adapters

NOTE: Ethernet adapter is not required if 3X-DEPVZ-AA or KZPCM is selected as SCSI adapter for StorageWorks shelf.

| | Maximum # Supported | | |
|---|---|---|---|
| | Tru64 UNIX | OpenVMS | |
| PCI FDDI adapter, single attachment station (SAS), multi-mode fiber (MMF), SC connector | 4 | 4 | 3X-DEFPA-AC |
| PCI FDDI adapter, DAS, MMF, SC connector | 4 | 4 | 3X-DEFPA-DC |
| MIC-SC dual fiber optic cable | | | BN34D-xx |
| SC-to-SC dual fiber optic cable | | | BN34B-xx |
| PCI FDDI adapter, DAS, TP-PMD | 4 | 4 | 3X-DEFPA-MC |
| PCI FDDI adapter, SAS, TP-PMD, requires BN25H-03 | 4 | 4 | 3X-DEFPA-UC |
| 3-m (9.8¢ ) FDDI cross-over cable | | | BN25H-03 |
| | | | |
| PCI 2-port intelligent synchronous controller<br>OpenVMS systems require V7.1-2 and minimum of X.25 V1.5 with Kits;<br>-DEC-AXPVMS-WANDD-V0105-1.1.PCSI<br>-DEC-AXPVMS-X25-V0105-1.1.PCSI<br>BC33x-xx cable required | 4 | 4 | 3X-PBXDD-AA |
| PCI 4-port intelligent synchronous controller<br>OpenVMS systems require V7.1-2 and minimum of X.25 V1.5 with Kits;<br>-DEC-AXPVMS-WANDD-V0105-1-1.PCSI<br>-DEC-AXPVMS-X25-V0105-1-1.PCSI<br>BC33xx-xx cable required | 4 | 4 | 3X-PBXDD-AB |
| | | | |
| PCI 4-port asynchronous controller; maximum two PBXDA-Ax per system (Tru64 UNIX systems require V4.0F) | 2 | 2 | PBXDA-AA |
| PCI 8-port asynchronous controller, cable included; maximum two PBXDA-Ax per system (Tru64 UNIX systems require V4.0F) | 2 | 2 | PBXDA-AB |
| PCI 16-port asynchronous controller, cable included; maximum two PBXDA-Ax per system (Tru64 UNIX systems require V4.0F) | 2 | 2 | PBXDA-AC |
| | | | |
| Asynchronous multi-port MUX expander XEM | | | CXI01-AB |
| Asynchronous MUX cable converter (RJ45-DB25) | | | CXI01-AC |
| Asynchronous MUX adapter (RJ45-MJ11), 8 pack | | | CXI01-AF |
| | | | |
| PCI-to-ATM 155 Mb adapter - Fiber | 6 | - | 3X-DAPBA-FA |
| PCI-to-ATM 155 Mb adapter - UTP | 6 | - | 3X-DAPBA-UA |
| PCI-to-ATM 622 Mb adapter - Fiber | 4 | - | 3X-DAPCA-FA |

## Step 13 - MEMORY CHANNEL - Optional

**Tru64 UNIX Systems**
(V5.0A and later)

- Each system node in the cluster requires a TruCluster software license (QL-6BRAE-AA)

**OpenVMS Systems**

- OpenVMS V7.1-2 or later and OpenVMS Cluster license (QL-MUZAE-AA) are required

**Configuring Information**

- Up to two PCI-to-System Area Network adapters (CCMAB-AA) are supported in a single system.
- For two-node clusters order a CCMAB-AA for each system and one BN39B-04 or BN39B-10 cable; cable connects directly to CCMAB-AA in each system.
- For three or four system nodes, order one CCMAB-AA adapter, one BN39B-04 or BN39B-10 cable and one CCMHB-AA; make connections from the CCMAB-AA in a system to the CCMHB-AA.
- CCMHB-AA includes four CCMLB-AA line cards and supports up to four nodes; expansion up to eight system nodes can be achieved by adding up to four CCMLB-AA line cards.
- If two CCMAB-AAs are configured in each system, a second CCMHB-AA is required for three or more nodes; in two-node clusters, the CCMAB-AAs may be directly connected.
- If nodes must be separated by a distance longer than standard copper cables allow, the CCMFB option converts the output of the standard CCMAB controller or CCMLB line card to single-mode fiber optic cable. The fiber optic connection may be up to 2,000 meters long between two CCMAB controllers connected in virtual hub mode, or 3,000 meters between a CCMAB controller and a CCMHB hub. (The connection from the CCMHB hub to a second system may also be 3,000 meters.) The CCMFB option requires a second PCI slot in the system from which it draws power only. It is normally connected to the corresponding CCMAB controller with the short BN39B-01 cable. The CCMFB is also used in the CCMHB hub where it occupies a slot normally used by the CCMLB line card, limiting expansion to four radial fiber optic connections.
- CCMHB-BA hub expansion box provides additional slots for up to eight fiber optic connections. Two standard length single-mode fiber optic cables are available from Compaq (BN34R-10 and BN34R-31); however, users normally provide this fiber optic connection. Fiber optic connectivity is completely transparent to the systems using it and has no performance impact

**MEMORY CHANNEL Controller/System Area Network Hub**

| | |
|---|---|
| PCI-to-System Area Network Controller, maximum two | CCMAB-AA |
| System Area Network Hub with four line cards; includes BN19P-2E power cord for Canada, Japan, and U.S. - for other regions, order appropriate power cord from the following list: | CCMHB-AA |
| Hub expansion box with no line cards | CCMHB-BA |
| Expansion line card for CCMHB hub | CCMLB-AA |
| 1-meter cable for CCMAB and CCMHB | BN39B-01 |
| 4-meter cable for CCMAB and CCMHB | BN39B-04 |
| 10-meter cable for CCMAB and CCMHB | BN39B-10 |
| Copper-to-single mode fiber optic converter | CCMFB-AA |
| Rackmount kit for CCMHB hub | 3X-BA61R-MC |
| Power cord for rackmount CCMHB hub | BN35S-02 |

| | | |
|---|---|---|
| MEMORY CHANNEL Power Cords | Australia, New Zealand | 103541-011 (U.S./Canada orders) |
| | | BN19H-2E (Other country orders) |
| | Central Europe | BN19C-2E |
| | Denmark | (U.S./Canada orders) |
| | | BN19K-2E (Other country orders) |
| | Egypt, India | 103541-AR1 (U.S./Canada orders) |
| | | BN19S-2E (Other country orders) |
| | Ireland, United Kingdom | BN19A-2E |
| | Israel | BN18L-2E |
| | Italy | 103541-461 (U.S./Canada orders) |
| | | BN35M-02 (Other country orders) |
| | Switzerland | 103541-511 (U.S./Canada orders) |
| | | BN19E-2E (Other country orders) |

## Step 14 - Graphics Adapters - Optional

- RAID Configuration Utility is accessible via console port; optional graphics capability is available
- Select graphics adapter, monitor, and country-specific keyboard for Tru64 UNIX and OpenVMS systems if required

| | Maximum # Supported | | |
|---|---|---|---|
| | Tru64 UNIX | OpenVMS | |
| 3Dlabs Oxygen VX1 32-MB PCI 2D graphics accelerator | 1 | 1 | SN-PBXGF-AB |
| PowerStorm 4D51T advanced 3D graphics accelerator | 4 | - | SN-PBXGI-AD |
| PowerStorm 300 3D multi-head graphics accelerator with 15-MB frame buffer memory and 16-MB texture memory; Patch Kit 1, Environmental Patch; V1.4 for multi-head (Kit Rev 4.0) | 8 | 4 | SN-PBXGD-AD |
| PowerStorm 350 3D multi-head graphics accelerator with 30-MB frame buffer memory and 32-MB texture memory; Patch Kit 1, Environmental Patch; V1.4 for multi-head (Kit Rev 4.0) | 8 | 4 | SN-PBXGD-AE |

## Step 15 - Monitors - Optional

- Graphics monitors other than those listed can be used if compatible with SVGA graphics ordered with system
- Video extension cable required if monitor is located more than 1 meter from server
- Monitors will ship with, but not be integrated with systems.

| | | |
|---|---|---|
| Carbon/Silver Monitors | V570 15-inch (13.8-inch viewable image size) multiple-scan color monitor, VGA to 1024 x 768 @85 Hz, 0.28 mm DP, MPRII/Energy Star Compliant, Northern Hemisphere with NA power cord, VGA cable | 3R-A3383-AA<br>228113-001 |
| | Same as above with Euro-power cord, TCO99 | 3R-A3384-AA<br>228113-021 |
| | Same as above, APD, no power cord, MPRII | 3R-A3385-AA<br>228113-B22 |
| | Same as above, PRC with power cord, CCIB | 3R-A3386-AA<br>228113-AA1 |
| | Same as above, Southern Hemisphere, with Australia/New Zealand power cord | 3R-A3387-AA<br>228113-011 |
| | Same as above, Equatorial, for Latin America with NA power cord | 3R-A3704-AA<br>228113-B29 |
| | P720 17-inch (16-inch viewable image size) auto-scanning color monitor, Diamondtron NF, 0.25 mm aperture grille pitch, VGA to 1280 x 1024 @85 Hz, MPRII/TCO 99/Energy Star Compliant, Northern Hemisphere with NA power cord, VGA cable | 3R-A3388-AA<br>244373-001 |
| | Same as above, with Euro-power cord | 3R-A3389-AA<br>244373-021 |
| | Same as above, APD, no power cord | 3R-A3390-AA<br>244373-B24 |
| | Same as above, PRC with power cord, CCIB | 3R-A3391-AA<br>244373-AA1 |
| | Same as above, Southern Hemisphere, with Australia/New Zealand power cord | 3R-A3392-AA<br>244373-011 |
| | P920 19-inch (18-inch viewable image size) auto-scanning color monitor, Diamondtron NF, 0.24 mm aperture grille pitch, VGA to 1600 x 1200 @85 Hz, MPRII/TCO 99/Energy Star Compliant, Northern Hemisphere with NA power cord, VGA cable | 3R-A3393-AA<br>244375-001 |
| | Same as above, with Euro power cord | 3R-A3394-AA<br>244375-021 |
| | Same as above, PRC with power cord, CCIB | 3R-A3396-AA<br>244375-AA1 |
| | Same as above, Southern Hemisphere, 0.25 to 0.27 mm aperture grille pitch, with Australia/New Zealand power cord | 3R-A3397-AA<br>244375-011 |
| | P1220 22-inch (20-inch viewable image size) auto-scanning color monitor, Diamondtron NF, 0.24 mm aperture grille pitch, VGA to 1792 x 1344 @85Hz, dual video input, USB Hub, MPRII/TCO 99/Energy Star Compliant, Northern Hemisphere with NA power cord, VGA cable | 3R-A3398-AA<br>244374-001 |
| | Same as above, with Euro power cord | 3R-A3399-AA<br>244374-021 |
| | Same as above, APD, no power cord | 3R-A3400-AA<br>244374-B24 |
| | Same as above, PRC with power cord, CCIB | 3R-A3401-AA<br>244374-AA1 |
| | Same as above, Southern Hemisphere, with Australia/New Zealand power cord | 3R-A3402-AA<br>244374-011 |

## Options

| | | |
|---|---|---|
| **Carbon/Silver Flat Panel Monitors** | TFT8030, 18.1-inch (18.0-inch viewable image size) TFT flat panel monitor, 0.28 mm pixel pitch, 1280 x 1024 @75 Hz, multi-mode support, MPRII/TCO99/Energy Star compliant, six video input connectors (two VGA, two DVI-I, one S-video, and one C-video), NA power cord, VGA and DVI-I cables | 3R-A3511-AA<br>234362-001 |
| | TFT5030, 15.1-inch (15.0-inch viewable image size) TFT flat panel monitor, 0.30 mm pixel pitch, 1024 x 768 @75 Hz, multi-mode support, MPRII/TCO99/Energy Star compliant, two video input connectors (one VGA and one DVI-I), NA power cord, VGA and DVI-I cables | 3R-A3353-AA<br>228134-001 |
| **Video Extension Cable** | 6 foot/1.8-meter video extension cable- optional | BN39C-02 |
| **Monitor Power Cords** | North America | BN26J-1K |
| | Australia, New Zealand, 2.5-meter | 103541-011 (U.S./Canada orders)<br>BN19H-2E (Other country orders) |
| | Central Europe, 2.5-meter | BN19C-2E |
| | Denmark, 2.5-meter | 103541-481 (U.S./Canada orders)<br>BN19K-2E (Other country orders) |
| | Egypt, India, South Africa, 2.5-meter | 103541-AR1 (U.S./Canada orders)<br>BN19S-2E (Other country orders) |
| | Israel, 2.5-meter | BN18L-2E |
| | Italy, 2.5-meter | 103541-461 (U.S./Canada orders)<br>BN35M-02 (Other country orders) |
| | Japan, 2.5-meter, Dentori approved | 3X-BN46F-02 |
| | Switzerland, 2.5-meter | 103541-511 (U.S./Canada orders)<br>(BN19E-2E (Other country orders) |
| | UK, Ireland, 2.5-meter | BN19A-2E |

## Step 16 - Keyboards, Power Cords, Documentation

### Step 16a - Keyboards - Required for all non-North American systems

- Select a keyboard and mouse
- All keyboards listed may not be available in all geographies
- Select an opal OpenVMS keyboard and opal mouse for use with VT5xx text terminals.
- Systems ordered in North America include U.S. English keyboard; selection of country-specific keyboard is mandatory for all non-North American systems

| | Opal | Carbon | |
|---|---|---|---|
| Keyboard/Language | OpenVMS | Tru64 UNIX | OpenVMS |
| U.S./English keyboard | LK461-A2 | 3R-LKQ48-AA | 3X-LK462-A2 |
| Arabic keyboard | - | 3R-LKQ48-BR | - |
| Belgian keyboard | LK461-AB | 3R-LKQ48-AB | 3X-LK462-AB |
| BHCSY keyboard | - | 3R-LKQ48-AX | - |
| Canadian/English keyboard | LK461-AQ | - | 3X-LK462-AQ |
| Canadian/French keyboard | LK461-AC | 3R-LKQ48-AC | 3X-LK462-AC |
| Cyrillic keyboard (Russian) | LK461-BT | 3R-LKQ48-BT | 3X-LK462-BT |
| Czech keyboard | LK461-BV | 3R-LKQ48-BV | 3X-LK462-BV |
| Danish keyboard | LK461-AD | 3R-LKQ48-AD | 3X-LK462-AD |
| Dutch keyboard | LK461-AH | 3R-LKQ48-AH | 3X-LK462-AH |
| Finnish keyboard | LK461-AF | 3R-LKQ48-AF | 3X-LK462-AF |
| French keyboard | LK461-AP | 3R-LKQ48-AP | 3X-LK462-AP |
| German keyboard | LK461-AG | 3R-LKQ48-AG | 3X-LK462-AG |
| Greek keyboard | LK461-BH | 3R-LKQ48-BH | 3X-LK462-BH |
| Hebrew keyboard | LK461-AT | 3R-LKQ48-AT | 3X-LK462-AT |
| Hungarian keyboard | LK461-BQ | 3R-LKQ48-BQ | 3X-LK462-BQ |
| International keyboard | - | 3R-LKQ48-BA | - |
| Italian keyboard | LK461-AI | 3R-LKQ48-AI | 3X-LK462-AI |
| Japanese keyboard | - | 3R-LKQ48-AJ | - |
| Korean keyboard | - | 3R-LKQ48-BK | - |
| Latin-American keyboard | - | 3R-LKQ48-AR | - |
| Norwegian keyboard | LK461-AN | 3R-LKQ48-AN | 3X-LK462-AN |
| Polish keyboard | LK461-BP | 3R-LKQ48-BP | 3X-LK462-BP |
| Portuguese keyboard | LK461-AV | 3R-LKQ48-AV | 3X-LK462-AV |
| Romanian keyboard | LK461-BL | - | 3X-LK462-BL |
| Simplified Chinese keyboard | - | 3R-LKQ48-CV | - |
| Slovak keyboard | LK461-CZ | 3R-LKQ48-CZ | 3X-LK462-CZ |
| Spanish keyboard | LK461-AS | 3R-LKQ48-AS | 3X-LK462-AS |
| Swedish keyboard | LK461-AM | 3R-LKQ48-AM | 3X-LK462-AM |
| Swiss/French keyboard | LK461-AK | 3R-LKQ48-AK | 3X-LK462-AK |
| Swiss/German keyboard | LK461-AL | - | 3X-LK462-AL |
| Traditional Chinese keyboard | - | 3R-LKQ48-BI | - |
| Thai keyboard | - | 3R-LKQ48-CB | - |
| Turkish keyboard | LK461-BU | 3R-LKQ48-BU | 3X-LK462-BU |
| Turkish/French keyboard | LK461-BW | - | 3X-LK462-BW |
| UK keyboard | - | 3R-LKQ48-AE | - |
| Yugoslavian keyboard | LK461-BY | - | 3X-LK462-BY |

## Options

| | | |
|---|---|---|
| **Mouse** | 3-button mouse – opal | SN-PBQWS-WA |
| | 3-button mouse – carbon | 3R-A3480-AA |
| **Keyboard or Mouse Extension Cable** | 6 foot/1.8 meter keyboard or mouse extension cable; to extend both keyboard and mouse order two cables | 3X-BC34A-06 |

### Step 16b - Power Cords

**Power Cords**

- Each system ordered in North America includes two, 120V or –48VDC power cords; selection of country specific power cords is mandatory for all non-North American systems. **Please contact product manager for additional information**.
- Additional power supply do not requires additional cord

### Step 16c - Documentation

| | |
|---|---|
| Additional AlphaServer TS20/40 System Information Kit (print), Owners Guide, User Interface Guide, and Release Notes | EK-TS42R-IN |

### Step 17 - Console Terminal - Optional

- Any terminal can be used as a console device
- Third-party console devices require an EIA-232 25-pin DSUB connector

| | |
|---|---|
| VT510 video terminal; requires keyboard, H8575-x adapter, and BC16E-x cable | VT510-xx |
| Console cable, female connector (25-pin passive adapter) | H8575-A |
| Console cable, male connector (adapter with EOS, ESD, 25 POS D-SUB) | H8575-D |

### Step 18 - Software - Required selection of media and documentation for first system on site

- Software Processor Code = E

**Tru64 UNIX**

- AlphaServer TS20/40 Tru64 UNIX systems include Unlimited User license, Server Extension license, Internet Express, iPlanet Directory Server, iPlanet Enterprise Server, and Compaq Secure Web Server

| | | |
|---|---|---|
| **When using Tru64 UNIX V5.0A or later** | Tru64 UNIX media and online documentation on CD-ROM | QA-6ADAA-H8 |
| | Tru64 UNIX full hard copy documentation | QA-6ADAA-GZ |
| | StorageWorks Software Package, with licenses for Logical Storage Manager and AdvFS Utilities | QB-5RXAE-AA |
| | TruCluster Server License | QL-6BRAE-AA |
| | Advanced Server for Tru64 UNIX, 25 client concurrent use license | QL-5U29M-3D |
| | Advanced Server for Tru64 UNIX, 50 client concurrent use license | QL-5U29M-3E |
| | Advanced Server for Tru64 UNIX, 100 client concurrent use license | QL-5U29M-3F |
| | Advanced Server for Tru64 UNIX, 250 client concurrent use license | QL-5U29M-3G |
| | Advanced Server for Tru64 UNIX, 500 client concurrent use license | QL-5U29M-3H |
| | Layered products media and documentation for Tru64 UNIX on CD-ROM | QA-054AA-H8 |
| | DECnet/OSI extended function license for Tru64 UNIX | QL-MTJAE-AA |
| | DECnet/OSI end-system license for Tru64 UNIX | QL-MTKAE-AA |
| | Open3D for Tru64 UNIX on CD-ROM, includes graphics drivers | QA-OAFAA-H8 |

**OpenVMS**

- AlphaServer TS20/40 OpenVMS systems include Base license with System Manager license and Compaq Enterprise Integration Server License Package for OpenVMS Revision V3.0A
- Compaq Enterprise Integration Package includes licenses for TCP/IP Services for OpenVMS, DECwindows Motif for OpenVMS Alpha, DECprint Supervisor for OpenVMS Alpha Plus, DECprint Supervisor for OpenVMS Open, DECnet-Plus for OpenVMS Alpha End System, Archive/Backup System for OpenVMS Management Tools, Archive/Backup Agent for Microsoft® Windows®NT™ , OpenVMS Disk Services for Windows NT, Office Server for OpenVMS, PATHWORKS 32, PATHWORKS V6 for OpenVMS – Advanced Server, and DIGITAL Office Server Client Access License
- OpenVMS Concurrent Use licenses provide the right to interactively use the operating system by the specified number of concurrent users on a designated OpenVMS system. OpenVMS Concurrent Use licenses can be moved from one system to another at user discretion and can be shared in a mixed OpenVMS VAX and OpenVMS Alpha cluster.
- OpenVMS Traditional Unlimited Use license is system specific and can only be used on one system at a time. It cannot be shared between systems or in an OpenVMS VAX or OpenVMS Alpha Cluster.

| | |
|---|---|
| Concurrent Use 1-user license | QL-MT3AA-3B |
| Concurrent Use 2-user license | QL-MT3AA-3C |
| Concurrent Use 4-user license | QL-MT3AA-3D |
| Concurrent Use 8-user license | QL-MT3AA-3E |
| Concurrent Use 16-user license | QL-MT3AA-3F |
| Concurrent Use 32-user license | QL-MT3AA-3G |
| Concurrent Use 64-user license | QL-MT3AA-3H |
| Concurrent Use 128-user license | QL-MT3AA-3J |
| Concurrent Use 256-user license | QL-MT3AA-3K |
| Traditional unlimited user license | QL-MT2AE-AA |
| OpenVMS V7.1-2 media and online documentation on CD-ROM | QA-MT1AR-H8 |
| OpenVMS V7.2-1 media and online documentation on CD-ROM | QA-MT1AT-H8 |
| OpenVMS media and documentation on CD-ROM | QA-MT1AA-H8 |
| OpenVMS full hard copy documentation | QA-001AA-GZ |
| Layered products media and documentation for OpenVMS on CD-ROM, includes Enterprise Integration Server for OpenVMS media and documentation. | QA-03XAA-H8 |
| DECnet extended function license for OpenVMS | QL-MTGAE-AA |
| DECnet end-system to extended function upgrade license for OpenVMS | QL-MTHAE-AA |
| OpenVMS Cluster license for Alpha systems | QL-MUZAE-AA |
| OpenVMS Volume Shadowing license | QL-2A1AE-AA |

### Step 19 - Service and Support - Optional

Compaq Services provides a wide range of service offerings, which are available as Statement of Work/Customized contracts. Contact you local Services Department for details and pricing. For information on Compaq service options available for AlphaServers and AlphaStations, consult a Compaq Sales Account Manager or visit http://www.compaq.com/services/

NOTE: This Web site is available in English only.

| | | | |
|---|---|---|---|
| AlphaServer TS20/40 Physical Specifications | Chassis | Weight | 130 lb (58.97 kg) |
| | | Length | 21.75 in (63.5 cm) |
| | | Width | 19.0 in (44.45 cm) |
| | | Height | 15.75 in (35.56 cm) |
| AlphaServer TS20/40 AC System Environmental Specifications | Temperature | Operating | 50° to 104° F (10° to 40° C) |
| | | Non-operating | –40° to 151° F (–40° to 66° C) |
| | | Storage (60 days) | –40° to 151° F (–40° to 66° C) |
| | | Rate of change | 20° F/hr (11° C/hr) |
| | Relative humidity | Operating | 20% to 80% |
| | | Non-operating | 20% to 80% |
| | | Storage (60 days) | 10% to 90% |
| | | Rate of change | 20%/hr |
| | Maximum wet bulb temperature | Operating | 82° F (28° C) |
| | | Storage (60 days) | 115° F (46° C) |
| | Maximum dew point temperature | Operating | 36° F (2° C) |
| | Heat dissipation | Nominal | 900 W, 3074 BTU/hr |
| | | Maximum | 1300 W, 4440 BTU/hr |
| | Airflow and quality | Intake location | Front |
| | | Exhaust location | Rear |
| | | Particle size | N/A |
| | | Concentration | N/A |
| | Altitude | Operating | 10,000 ft (3,048 m) |
| | | Non-operating | (40,000 ft (12,192 m) |
| | Vibration | Operating | 10 to 500 Hz, 0.1 G peak |
| | | Non-operating | 5 to 300 Hz, 1.03 G rms |
| AlphaServer TS20/40 DC System Environmental Specifications | Temperature | Operating (continuous) | 41° F to 104° F (5 to 40° C) |
| | | Operating (short term) | 41° F to 131° F (5 to 55° C) |
| | | Non-operating | –40° to 158° F (–40 to 70° C) |
| | | Rate of change | 54° F/hr (30° C/hr) |
| | Relative humidity | Operating | 5° to 90% (noncondensing) |
| | | Non-operating | 5° to 93% |
| | Maximum wet bulb temperature | Operating | 89° F (32° C) |
| | | Non-operating | 102° F (39° C) |
| | Heat dissipation | Nominal | 900 W, 3074 BTU/hr |
| | | Maximum | 1300 W, 4440 BTU/hr |
| | Airflow and quality | Intake location | Front |
| | | Exhaust location | Rear |
| | | Particle size | N/A |
| | | Concentration | N/A |
| | Altitude | Operating | 10,000 ft (3,048 m) |
| | | Non-operating | 40,000 ft (12,192 m) |

| | | |
|---|---|---|
| AlphaServer TS20/40 DC Electrical Specifications | Nominal voltage | –48 VDC |
| | Operational voltage range | –36 to –72 VDC |
| | Input current (maximum) | 27.1 A at –48 VDC |
| | Input power | 1300 W |

| DC Design | Operating Temperature | Output Power | Input Voltage |
|---|---|---|---|
| Output power | (104° F to 131° F) 40° to 55° C (short term) | 960 W | 40 to 72 VDC |
| | 41° F to 104° F (5° to 40° C) | 900 W | 36 to 40 VDC |

| | | | | |
|---|---|---|---|---|
| AlphaServer TS20/40 AC Electrical Specifications | Nominal voltage (VAC) | 100 | 120 | 200 to 240 |
| | Voltage range (VAC) temporary condition | 90 to 100 | 110 to 128 | 180 to 250 |
| | Power source phase | Single | Single | Single |
| | Nominal frequency (Hz) | 50/60 | 50/60 | 50/60 |
| | Frequency range (Hz) | 49 to 51/59 to 61 | 49 to 51/59 to 61 | 49 to 51/59 to 61 |
| | RMS current (maximum steady state) | 10.7 A | 8.9 A | 5.4 A |
| | Power Cords (2) | 14 ft. 10 in/52 cm IEC 320 C13 to NEMA 5-15 (North America) or IEC320 C13 to IEC 320 C14 (other countries) | | |
| | Cabinet Power Cords (2) | 10 ft 10 in/30 cm 120 V non-removable NEMA L5-30P or 200-240 V non-removable IEC 309 | | |

| AC Design | Operating Temperature | Output Power | Input Voltage |
|---|---|---|---|
| Output power | 41° F to 104° F (5° to 40° C) | 960 W | 100 to 270 VAC |
| | 41° F to 104° F (5° to 40° C) | 820 W | 90 to 100 Vac |

| | | | |
|---|---|---|---|
| AlphaServer TS20/40 Acoustic Data | | | |
| Acoustics — Declared Values per ISO 9296 and ISO 7779 | | LWAd, B | LpAm, dBA (bystander positions) |
| | Idle | 6.6 | 48 |
| | Operating | 6.6 | 48 |

| | | |
|---|---|---|
| AlphaServer TS20/40 Regulatory Approvals | Agency approvals | UL: Listed to UL1950 (3rd edition) ULC<br>FCC: Part 15.B Class A<br>CE: EN55022, EN50082<br>VCCI Class II ITE<br>BCIQ: CISPR22, CNS13438<br>c-Tick: CISPR22, AS/NZS 3548 |
| | Reviewed to | AS/NZ 3260:1993 Australian/New Zealand Standard<br>EN 60950/A4: 1997 European Norm<br>IEC 950 (2nd edition, 4th amend) |
| | Other approvals/certification (DC version) | Bellcore NEBS GR-63-CORE<br>Bellcore NEBS GR-1089-CORE11<br>Bellcore SR-3580 |

© Copyright 2003 Hewlett-Packard Development Company, L.P.
The information contained herein is subject to change without notice.
UNIX is a registered trademark or trademark of The Open Group in the U.S. and/or other countries. The only warranties for HP products and services are set forth in the express warranty statements accompanying such products and services. Nothing herein should be construed as constituting an additional warranty. HP shall not be liable for technical or editorial errors or omissions contained herein.