Overview

At A Glance

Compaq *AlphaServer*™ TS20/40 Systems include:

- Alpha 21264 68/833-MHz CPU with 8-MB L2 Dual Data Rate Cache
- 14 64-bit PCI I/O expansion slots
- 512-MB, 1-GB, 2-GB, or 4-GB memory options
- 1.44-MB diskette drive
- 600-MB 40X IDE CD-ROM drive
- Two 9-pin serial ports
- One 25-pin parallel port
- RMC dedicated serial port, 6-pin MMJ connector
- Dual USB ports
- Keyboard and mouse port
- Power supply
- AC (auto sensing) -48VDC (normal) or -32 to -72VDC for full range
- U.S. English keyboard with North America orders
- 3-button mouse
- Integral remote system management console
- Customer documentation
- Tru64™ UNIX™ or OpenVMS™ Factory Installed Software
- 90-day software warranty
- Protected by Compaq Services, including three-year hardware warranty, on-site with 5 x 9 next business day response

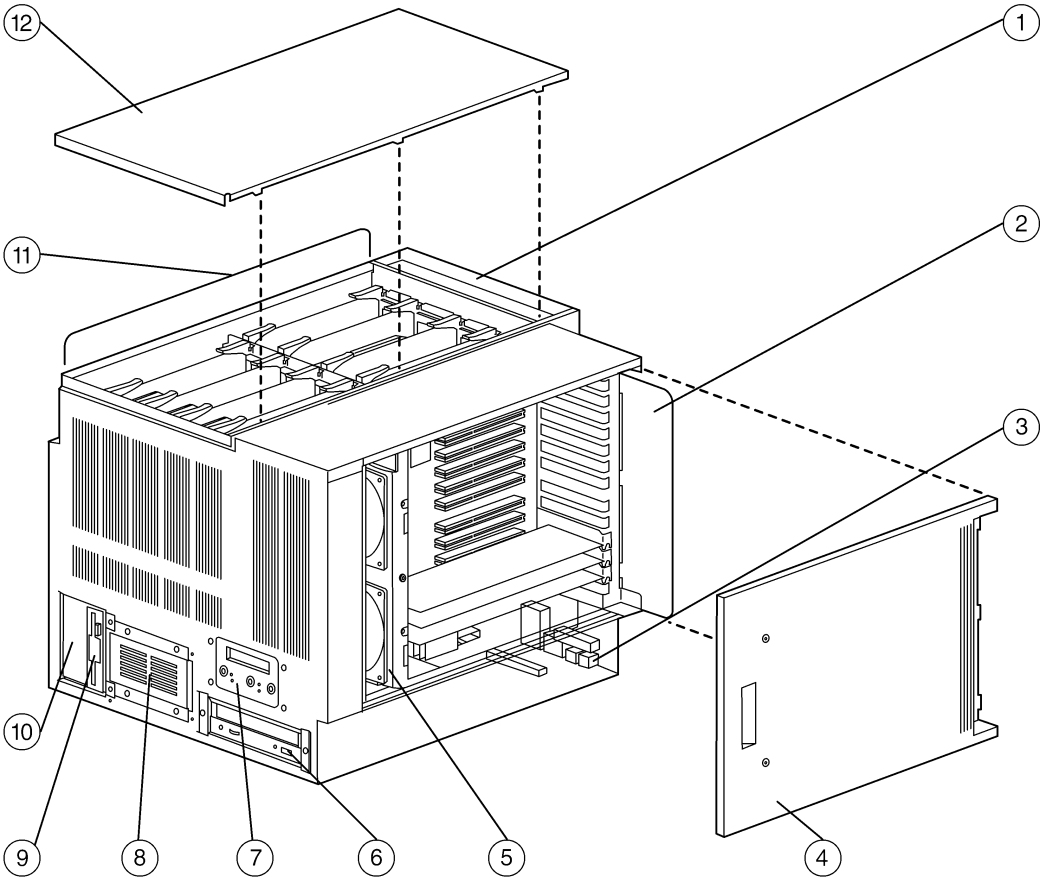

1. CPU fan assembly
2. PCI card cage
3. I/O port module
4. PCI access cover
5. PCI card-cage fan assembly
6. CD-ROM drive
7. Operator control panel
8. Optional hard disk drive bay
9. Floppy drive
10. Optional tape drive bay (3.5” only)
11. System card cage
12. Top cover

Standard Features

Processor	Alpha 21264 68/833-MHz CPU	
Cache Memory	8-MB L2 Dual Data Rate Backup Cache	
Upgradability	Supports additional processors and upgrades of memory and hard drives	
Memory	Minimum	512 MB
	Maximum	16 GB (16 DIMM slots) – AlphaServer TS20
		32 GB (32 DIMM slots) – AlphaServer TS40
Network Controller	Choice of Ethernet controllers	
Expansion	PCI I/O slots	14 slots (9 primary and 5 secondary; refer to PCI Configuration Guidelines)
Storage	Diskette Drive	1.44 MB diskette drive in dedicated slot
	CD-ROM	600-MB 40X IDE CD-ROM
	Hard Drives	Choice of 9.1-GB, 18.2-GB, or 36.4-GB drives
Interfaces	Parallel	1 25-pin parallel port
	Serial	2 9-pin serial ports
	USB	Dual USB ports
	Keyboard	1
	Mouse	1
	Remote systems management	1 dedicated remote systems management port
Graphics	Optional	
Form Factor	Rackmount (Standard or NEBS certified cabinet)	
Power Supply	Power supply, hot swappable, dual redundant - AC unit (auto-sensing) - DC unit –48VDC (normal) or –32 to –72VDC full range	
Manageability	Compaq *Insight Manager*™	
OS Support	AlphaServer TS20/40 Tru64 UNIX systems include pre-installed software, Base license, Unlimited User license, Server Extension license, Internet Express, iPlanet Directory Server, iPlanet Enterprise Server, and Compaq Secure Web Server AlphaServer TS20/40 OpenVMS systems include pre-installed software, Base license with System Manager license and Enterprise Integration Server License Package for OpenVMS V3.1 Minimum OS support – Tru64 UNIX V5.1A or Open VMS V7.1-2	
Service and Support	Protected by Compaq Services including a Three-year on-site hardware warranty with next business day response. Software warranty is a 90-day telephone advisory. Training, consulting, network integration, software support, comprehensive system maintenance and guaranteed uptime services are also available for customers requiring higher levels of service and support.	
PCI Configuration Guidelines	• Physical slots 1 through 5 support only PCI33 Type 0 single-function PCI adapter cards that use a single PCI functional interrupt line. • Physical slots 1 through 5 do not suport PCI33 Type 1 multifunction graphics adapters, multiport Ethernet adapters, etc. • MEMORY CHANNEL (CCMAB-AA) PCI adapters are ONLY supported installed within physical slots 6-14. • IPCON-AA PCI adapter (See input # 7) in physical slot 1 or 5, while a SS7 card is concurrenly installed in physical slot 5 or 1, respectively.	

Systems/Options

Step 1 – Select system

AlphaServer TS20/40 systems require the **mandatory** selection of the following items:

- Disk drive cage or *StorageWorks*™ shelf (see Step 5)
  - Disk drive cage requires Ultra2 SCSI LVD (**3X-KZPCA-AA**)
  - StorageWorks shelf requires UltraSCSI adapter and SCSI cable (see Step 10)
- System disk drive (Step 5)
- Ethernet adapter (Step 7)
- Chassis Rackmount Kit (see Step 8) – each server includes dress bezel and two power cords
- Non-North American systems require country-specific keyboard (see Step 16); North American systems include U.S. English keyboard
- Software media and documentation for first system onsite

NOTE: Bold face part numbers indicate NEBS qualified.
For system integration of options with 6-3 part numbers, contact *Custom*Systems.
Option part numbers identified with the notation "U.S./Canada orders"and "Other country orders" refers specifically to the country where the order originates, and indicates the valid and orderable part numbers in the respective geographies.

AlphaServer TS20 Systems					
TS20	**OS**	**CPU**	**PCI I/O Slots**	**Memory / Cache**	**Order No.**
AC	Tru64 UNIX	833 MHz	14	512 MB/8 MB	DA-T56RA-CA
AC	Tru64 UNIX	833 MHz	14	1 GB/8 MB	DA-T56RA-DA
AC	Tru64 UNIX	833 MHz	14	2 GB/8 MB	DA-T56RA-EA
DC	Tru64 UNIX	833 MHz	14	512 MB/8 MB	**DA-T56RB-CA**
DC	Tru64 UNIX	833 MHz	14	1 GB/8 MB	**DA-T56RB-DA**
DC	Tru64 UNIX	833 MHz	14	2 MB/8 MB	**DA-T56RB-EA**
AC	OpenVMS	833 MHz	14	512 MB/8 MB	DY-T56RA-CA
AC	OpenVMS	833 MHz	14	1 GB/8 MB	DY-T56RA-DA
AC	OpenVMS	833 MHz	14	2 GB/8 MB	DY-T56RA-EA
DC	OpenVMS	833 MHz	14	512 MB/8 MB	**DY-T56RB-CA**
DC	OpenVMS	833 MHz	14	1 GB/8 MB	**DY-T56RB-DA**
DC	OpenVMS	833 MHz	14	2 GB/8 MB	**DY-T56RB-EA**
AlphaServer TS40 Systems					
TS40	**OS**	**CPU**	**PCI I/O Slots**	**Memory/Cache**	**Order No.**
AC	Tru64 UNIX	833 MHz	14	512 MB/8 MB	DA-T64CA-CA
AC	Tru64 UNIX	833 MHz	14	1 GB/8 MB	DA-T64CA-DA
AC	Tru64 UNIX	833 MHz	14	2 GB/8 MB	DA-T64CA-EA
AC	Tru64 UNIX	833 MHz	14	4 GB/8 MB	DA-T64CA-FA
DC	Tru64 UNIX	833 MHz	14	512 MB/8 MB	**DA-T64CB-CA**
DC	Tru64 UNIX	833 MHz	14	1 GB/8 MB	**DA-T64CB-DA**
DC	Tru64 UNIX	833 MHz	14	2 GB/8 MB	**DA-T64CB-EA**
DC	Tru64 UNIX	833 MHz	14	4 GB/8 MB	**DA-T64CB-FA**
AC	OpenVMS	833 MHz	14	512 MB/8 MB	DY-T64CA-CA
AC	OpenVMS	833 MHz	14	1 GB/8 MB	DY-T64CA-DA
AC	OpenVMS	833 MHz	14	2 GB/8 MB	DY-T64CA-EA
AC	OpenVMS	833 MHz	14	4 GB/8 MB	DY-T64CA-FA
DC	OpenVMS	833 MHz	14	512 MB/8 MB	**DY-T64CB-CA**
DC	OpenVMS	833 MHz	14	1 GB/8 MB	**DY-T64CB-DA**
DC	OpenVMS	833 MHz	14	2 GB/8 MB	**DY-T64CB-EA**
DC	OpenVMS	833 MHz	14	4 GB/8 MB	**DY-T64CB-FA**

Options

Step 2 – Additional CPU Modules – Optional

- AlphaServer TS20 includes one CPU, one additional CPU is supported
- AlphaServer TS40 includes one CPU, three additional CPUs are supported

SMP upgrade, includes one 68/833-MHz CPU with 8-MB cache and Tru64 UNIX SMP license	**KN610-CB**
SMP upgrade, includes one 68/833-MHz CPU with 8-MB cache and OpenVMS SMP license	**KN610-CC**

Step 3 – Memory – Optional

- Systems include one memory option
- TS20 systems supports four memory options (total of 16 DIMMs)
- TS40 systems support eight memory options (total of 32 DIMMs)
- Memory performance considerations: Interleaved operations reduce the average latency and increase the memory throughput over non-interleaved operations. With one memory option (4 DIMMs) installed, memory interleaving will not occur. With two identical memory options (8 DIMMs) installed, memory read-write operations are two-way interleaved. With four identical memory options (16 DIMMs) installed, memory read-write operations are four-way interleaved, maximizing memory throughput.

512-MB memory option (4 x 128-MB DIMMs)	**MS610-CA**
1-GB memory option (4 x 256-MB DIMMs)	**MS610-DA**
2-GB memory option (4 x 512-MB DIMMs)	**MS610-EA**
4-GB memory option (4 x 1024-MB DIMMs)	**MS610-FA**

Step 4 – Additional Power Supplies – Required for redundancy

- Power supply included with system provides support for full system
- Second power supply provides full redundancy
- Rack kit include two internal power cords regardless of the number of power supplies

AlphaServer TS20/40 950W 120/240VAC power supply	**3X-H7820-AA**
AlphaServer TS20/40 950W –48VDC power supply	**3X-H7820-AB**

Step 5 – Disk Drive Cage or *StorageWorks* Shelf – Mandatory

- AlphaServer TS20/40 enclosure supports one 2-bay disk drive cage
- The number of Universal 42xx/43xx StorageWorks shelves or BA36R StorageWorks shelves dependd upon the selected cabinet.

Step 5a – Disk Drive Cage – Requires selection of system disk drive

Two-bay disk drive cage with cable for use with 1.0″ universal drives – requires mandatory selection of one Ultra2 SCSI adapter (3X-KZPCA-AA)	**BA610-2D**

NOTE: See AlphaServer TS20/40 Configuration Chart for Storage Adapters in Step 10.
Bold face option part numbers indicate NEBS qualified.

System Disk Drives *(Supported in Disk Drive Cage)*	9.1-GB Ultra3 SCSI 10,000 rpm 1.0″ Universal disk drive	3R-A0584-AA
	9.1-GB Ultra3 SCSI 15,000 rpm 1.0″ Universal disk drive	3R-A1542-AA
	18.2-GB Ultra3 SCSI 10,000 rpm 1.0″ Universal disk drive	3R-A0585-AA
	18.2-GB Ultra3 SCSI 15,000 rpm 1.0″ Universal disk drive	3R-A1543-AA
	36.4-GB Ultra3 SCSI 10,000 rpm 1.0″ Universal disk drive	3R-A0919-AA
	36.4-GB Ultra3 SCSI 15,000 rpm 1.0″ Universal disk drive	3R-A3079-AA
	72.8-GB Ultra3 SCSI 10,000 rpm 1.0″ Universal disk drive	3R-A3050-AA

Options

Step 5 – Disk Drive Cage or *StorageWorks* Shelf – Mandatory *(continued)*

Step 5b – StorageWorks Model 4314R and Model 4354R Universal Drive Shelves

StorageWorks Model 4314R Shelves

StorageWorks Model 4314R and 4354R Ultra2 SCSI (LVD) single-bus and split-bus Universal drive shelves; refer to Compaq StorageWorks Enclosure 4300 Family QuickSpecs when configuring shelves. When selecting a DS-SSL13-Rx split-bus shelf, order two **3X-KZPCA-AA** adapters with BN38C-05 cables. Model 43xx shelves are compatible with Wide Ultra2 (LVD) adapters only. Note that the depth of a DS-SL13R-xx shelf does not allow front and rear mounting (Universal shelves require onsite installation).

	StorageWorks Model 4314R Ultra3 SCSI (LVD) single-bus Universal drive rackmount shelf, includes one power supply, U.S. (190209-001)	DS-SL13R-AA
	StorageWorks Model 4314R Ultra3 SCSI (LVD) single-bus Universal drive rackmount shelf, includes one power supply, Japan	190209-291 (U.S./Canada orders)
		DS-SL13R-AJ (Other country orders)
	StorageWorks Model 4314R Ultra3 SCSI (LVD) single-bus, -48VDC, rackmount shelf, includes two redundant power supplies, dress bezel and two DC power cords	**3X-SL13R-TA**
StorageWorks Model 4354R Shelves	StorageWorks Model 4354R Ultra3 SCSI (LVD) single-bus Universal drive rackmount shelf, includes two redundant power supplies, U.S. (190211-001)	DS-SL13R-BA
	StorageWorks Model 4354R Ultra3 SCSI (LVD) split-bus Universal drive rackmount shelf, includes two redundant power supplies, Japan	190211-291 (U.S./Canada orders)
		DS-SL13R-BJ (Other country orders)
	StorageWorks Model 4354R Ultra3 SCSI (LVD) split-bus, -48VDC, rackmount shelf, includes two redundant power supplies, dress bezel and two DC power cords	**3X-SL13R-TB**
Additional Power Supplies	Additional power supply for single-bus Universal shelf, U.S.	212980-B21 (U.S./Canada orders)
		DS-SE2UP-AA (Other country orders)
	Additional power supply for single-bus Universal shelf, International	119826-B31 (U.S./Canada orders)
		DS-SE2UP-AI (Other country orders)

NOTE: Model 4314R shelf with DS-KZPCC-AC adapter does not support a disk drive in last slot. Bold face part numbers indicate NEBS qualified.

System Disk Drives *(Supported in Model 4314Rand Model 4354R Universal Drive Shelves)*	9.1-GB Ultra3 SCSI 10,000 rpm 1.0″ Universal disk drive	3R-A0584-AA
	9.1-GB Ultra3 SCSI 15,000 rpm 1.0″ Universal disk drive	3R-A1542-AA
	18.2-GB Ultra3 SCSI 10,000 rpm 1.0″ Universal disk drive	3R-A0585-AA
	18.2-GB Ultra3 SCSI 15,000 rpm 1.0″ Universal disk drive	3R-A1543-AA
	36.4-GB Ultra3 SCSI 10,000 rpm 1.0″ Universal disk drive	3R-A0919-AA
	36.4-GB Ultra3 SCSI 15,000 rpm 1.0″ Universal disk drive	3R-A3079-AA
	72.8-GB Ultra3 SCSI 10,000 rpm 1.0″ Universal disk drive	3R-A3050-AA

Options

Step 5 – Disk Drive Cage or *StorageWorks* Shelf – Mandatory *(continued)*

Step 5b – StorageWorks Model 4314R and Model 4354R Universal Drive Shelves *(continued)*

StorageWorks Model 4314T Standalone Enclosures	Model 4314T Ultra3 SCSI, Single-bus Tower Enclosure, U.S.	190210-001 (U.S./Canada orders)
		DS-SL13T-AA (Other country orders)
	Model 4314T Ultra3 SCSI, Single-bus Tower Enclosure, International	(190210-B31 (U.S./Canada orders)
		DS-SL13T-AB (Other country orders)
	Model 4314T Ultra3 SCSI, Single-bus Tower Enclosure, Japan	190210-291 (U.S./Canada orders)
		DS-SL13T-AJ (Other country orders)

Step 5c – StorageWorks BA36R Shelf – Requires selection of UltraSCSI adapter and SCSI cable (Step 10) and system disk drive

- StorageWorks Shelf supports seven 3.5 x 1.6 hard disk drives; with addition of redundant power supply, only six drives are supported
- StorageWorks shelf kits are mounted back-to-back in cabinets

StorageWorks UltraSCSI single-bus shelf kit	BA36R-RC
StorageWorks UltraSCSI split-bus shelf kit	BA36R-RD
3-meter SCSI cable	BN37A-03

System Disk Drives (Supported in StorageWorks BA36R Shelf)	9.1-GB Ultra2 SCSI 7,200 rpm disk drive	DS-RZ1DA-VW
	9.1-GB Ultra3 SCSI 10,000 rpm disk drive	DS-RZ1DD-VW
	18.2-GB Ultra2 SCSI 7,200 rpm disk drive	DS-RZ1EA-VW
	18.2-GB Ultra3 SCSI 10,000 rpm disk drive	DS-RZ1ED-VW
	36.4-GB Ultra3 SCSI 10,000 rpm disk drive	DS-RZ1FC-VW

Step 6 – Internal Removable Media – Optional

- System supports three internal removable devices
- System includes 1.44-MB diskette drive
- System includes 5.25″ half-height 600-MB 40X IDE CD-ROM drive
- Removable media slot provide support for one 3.50″ AIT, or one 3.50″ DAT tape drive media device

3.50″ 20/40-GB 4 mm DAT Ultra2 (LVD) SCSI tape drive, graphite black; requires Ultra2 (LVD) adapter (3X-KZPCA-AA)	**3X-SD15X-AA**
3.50″ 50/100-GB 8 mm AIT Ultra2 (LVD) SCSI tape drive, graphite black; requires Ultra2 (LVD) adapter (3X-KZPCA-AA)	**3X-SZ15X-AA**

NOTE: Bold face part numbers indicate NEBS qualified. 3.5″ AIT and DAT tapes can only be used with AlphaServer TS20/40.

Options

Step 7 – Ethernet Adapters – Mandatory

- Adapters require a minimum of Tru64 UNIX V5.1A or OpenVMS V7.1-2
- Each adapter uses one PCI slot
- See Step 12 for additional networking options

NOTE: Ethernet adapter is not required if KZPCM or 3X-DEPVZ-AA is selected as SCSI adapter for StorageWorks shelf

	Maximum # Supported		
	Tru64 UNIX	**OpenVMS**	
PCI 1-port 32-bit 10/100-Mb single-channel UTP FE Ethernet adapter (Twisted Pair)	4	4	3X-DE600-AA
PCI to dual-port 10/100 UTP Fast Ethernet adapter (supported under Tru64 UNIX V4.0F and *TruCluste*™*r* V1.6)	2	4	**3X-DE602-AA**
PCI single-port MMF add-on daughter card for 3X-DE602-AA (supported under Tru64 UNIX V4.0F and TruCluster V1.6)	2	2	3X-DE602-FA
PCI 4-port 10/100 Mb Ethernet adapter	1	1	**DE504-BA**
PCI Combo adapter, includes 10/100 Mbps Ethernet adapter, Ultra2 LVD SCSI adapter, and 2D graphics adapter, no support for multi-head graphics requires OpenVMS V7.1-2 with: DEC-AXPVMS-VMS712_UPDATE-V0300—4.PCSI DEC-AXPVMS-VMS712_GRAPHICS-V0300—4.PCSI DEC-AXPVMS-DNVOSIECO06-V0701—4.PCSI is recommended OpenVMS V7.2-1 requires Tima kit: DEC-AXPVMS-VMS&@!_UPDATE-V0100--4.PCSI Requires Tru64 UNIX V4.0F with NHD2; TruCluster V5.1 support restricted to non-shared buses Tru64 UNIX V5.1 requires Patch Kit 3: T64V51AS0003-20010413.tar	1	1	**3X-DEPVZ-AA**
Cable for 10BaseT Twisted Pair connection			BN25G-xx
3-meter SCSI cable			BN37A-03
PCI Gigabit Ethernet adapter, SC connectors, MMF – no boot support	4	4	DEGPA-SA
PCI 10/200/1000 UTP Ethernet adapter; requires minimum version Tru64 UNIX V5.0A, Patch kit 2: T64V50AAS0002-20001004.tar	4	4	DEGPA-TA
SC-SC dual Fibre Optic cable, mm, pp xx = length in meters			BN34B-xx

NOTE: Bold face option part numbers indicate NEBS qualified.

Step 8 – System Enclosures – Chassis Rackmount Kit

Step 8a – Chassis Rackmount Kit for NEBS or Standard Cabinet (Non-NEBS)

- Chassis Slide Kit included for each AlphaServer TS20/40 system
- Each Chassis Rackmount Kit supports one system

Chassis Rackmount Kit for Standard Cabinet	3X-BA61R-SC
Chassis Rackmount Kit for NEBS Cabinet	3X-BA61R-NC

Options

Step 9 – Cabinets (Standard and NEBS)

NOTE: Contact Compaq CustomSystems for for any cabinet configurations with AlphaServer TS20/40.

- Cabinet enclosures require selection of the following items:
- H9A10 (34U) or H9A15 (41) or NEBS cabinet
- Power Distribution Unit (PDU); One PDU is included in NEBS cabinet
- Rear cabinet extender based on cabinet height (H9A10 and H9A15)
- Cabinet front door based on cabinet height (H9A10 and H9A15)
- Factory integration
- Ballast kit if only one system is ordered for the H9A15 cabinet
- Japan only – 240V cabinet required when using universal shelves (For H9A10 and H9A15 cabinet)
- Installation of one AlphaServer TS20/40 system in an H9A15 cabinet requires the mandatory selection of a ballast kit for H9A10 and H9A15 cabinet)

General Cabinet Description	67-inch cabinet with 56-inchor 32U of usable vertical space, 120V dual-24A controller, each with 10 NEMA 5-15R outlets, input power plug NEMA L5-30P, Americas, Asia Pacific; includes rear door and top fan tray	H9A10-ZB
	79-inch cabinet with 68.25-inch or 39U of usable vertical space, 5-15R outlets, input power plug NEMA L5-30P, Americas, Asia Pacific; includes rear door and top fan tray	H9A15-ZB
	76-inch cabinet with 70-inch or 38U of usable vertical space, 1900 mm x 600 mm x 600 mm seismic electronic enclosure, 19-inch RETMA mounting rails with non-threaded holes; color Carbon Black; includes rear door and one –48V PDU (3X-H7603-AB)	3X-H9705-AB
	70-inch cabinet with 65-inch or 35U of usable vertical space, 1800 mm x 600 mm x 600 mm seismic electronic enclosure, 19-inch RETMA mounting rails with non-threaded holes; color Carbon Black; includes rear door and one –48V PDU (3X-H7603-AB)	3X-H9705-BB
Rear Cabinet Extender – Optional	Rear cabinet extender, graphite black, for H9A10-ZB cabinets	H9C10-ZE
	Rear cabinet extender, graphite black, for H9A15-ZB cabinets	H9C15-ZE
Front Trim Kit – Required selection of either Front Door Kit or Front Trim Kit	Front trim kit, graphite black, for H9A10-ZE cabinet enclosure	H9C10-ZT
	Front trim kit, graphite black, for H9A15-ZE cabinet enclosure	H9C15-ZT
Cabinet Front Door – Required selection of either Front Door Kit or Front Trim Kit	Front door, graphite black, for H9A10-ZE cabinet enclosure	H9C10-ZF
	Front door, graphite black, for H9A15-ZE cabinet enclosure	H9C15-ZF
Factory Integration – Required	Factory Integration of systems and storage devices assembled and configured in cabinet enclosure in predefined locations	YT-CSSIT-01
Ballast Kit – Required only if one system is ordered for the H9A15 cabinet	Ballast is added to a cabinet at particular locations for specific configurations to meet safety regulations for installation, operation, and service; see Cabinet Configuration Charts.	
	Two 35 to 40 lb/16 to 18 kg steel plates	H9C10-MC
Power Distribution Unit (PDU) – For standard cabinet	PDU, NEMA Input, NEMA Outlets, 120V	H7600-AA
	PDU, NEMA Input, NEMA Outlets, 240V	H7600-AB
Power Distribution Unit (PDU) – For NEBS cabinet	Two sections, -48V PDU contains two removable modules rated for 120A. 2U configuration for standard 19.0-inch rackmount and convection cooler. The 48VDC input voltage is distributed to eight separate output connectors	3X-H7603-AB

Step 10 – Storage Adapters/Controllers

NOTE: Refer to the following chart when configuring adapters, shelves, and disks.

AlphaServer TS20/40 Configuration Chart for Storage Adapters				
Adapter	**Shelf**	**Disk Drive**	**Tru64 UNIX**	**OpenVMS**
		External RAID		
	DS-SL13R-xx	3R-A3xxx-AA 1.0″Universal	V4.0F – V5.1	
		Internal RAID		
DS-KZPCC-AC/CE[1]	BA610-2D (internal RAID)[2]	3R-A3xxx-AA 1.0″ Universal	V5.1/5.1A	
3X-KZPCA-AA	BA610-2D DS-SSL14-Rx DS-SL13R-xx 3X-SL13R-TA 3X-SL13R-TB	3R-A0xxx-AA 1.0″ Universal 3R-A1xxx-AA 1.0″ Universal 3R-A1xxx-AA 1.0″ Universal 3R-A0xxx-AA 1.0″ Universal 3R-A0xxx-AA 1.0″ Universal	V4.0F to V5.1	V7.2-1
3X-DEPVZ-AA	DS-SL13R-xx 3X-SL13R-TA 3x-SL13R-TB	3R-A1xxx-AA 1.0″ Universal 3R-A0xxx-AA 1.0″ Universal 3R-A0xxx-AA 1.0″ Universal	V4.0F with NHD2	V7.2-1
KZPCM-DA	BA36R-xx	DS-RZ1xx-VW, DS-EZxxx-VW	V4.0F to V5.1	V7.2-1
KZPBA-CA	BA36R-xx	DS-RZ1xx-VW, DS-EZxxx-VW	V4.0F to V5.1	V7.2-1
NOTE: Ethernet adapter is not required if 3X-DEPVZ-AA or KZPCM-DA is selected as SCSI adapter for StorageWorks shelf.				
RAID Controllers				
Adapters	**Shelf**	**Disk Drive**	**Tru64 UNIX**	**OpenVMS**
KZPAC-AA/CA/CB	BA36R-xx	DS-RZ1xx-VW	V4.0F to V5.1	V7.2-1
DS-KZPCC-CE/AC	BA36R-xx*	3R-A0xxx-AA 1.0″ Universal 3R-A1xxx-AA 1.0″ Universal	V4.0F only	-

NOTE: * = BA36R-xx shelves require DOC2 I/O module, DS-BA35X-FC; order DS-BA35X-FC as an independent option (will not be factory installed).

(1) DS-KZPCC-AC/CE RAID controllers can be used with universal shelves and drives in TS20/40. Configuration rules are restricted to specific CPU and OS versions:
- Tru64 UNIX V5.1 requires Patch Kit 3 (BL17) and Early Release Patch C462.02

(2) Only BA610-2D cage (with Nile Cards Rev –0B) shipped after 1 October 2001 supports internal RAID. Contact Customer Services to replace Nile Cards shipped in BA610-2D disk card cage prior to 1 October 2001 where internal RAID is required.

Step 10 – Storage Adapters/Controllers *(continued)*

	Maximum # Supported		
	Tru64 UNIX	**OpenVMS**	
PCI 2-port PCI to Ultra3, 64-bit LVD2 SCSI adapter, uses one PCI slot; Includes internal 68-pin and external 68-pin HD connectors; requires BN38C-xx cable to connect adapter to Universal shelf; supports shared JBOD using Models 4314R and 4354R Universal shelves; support restricted to EV68 833-MHz systems only and Tru64 UNIX V5.1A as a minimum.	4	-	3X-KZPEA-DB
PCI 3-port PCI to Ultra2, 64-bit, LVD backplane RAID controller with 64-MB cache (uses one PCI slot); requires connection to DS-SSL14-Rx (maximum seven disks supported per channel) or to DS-SL13R-xx (maximum 14 disks with single channel)	8	-	DS-KZPCC-CE
PCI 1-port PCI to Ultra2, 64-bit, LVD backplane RAID controller with 16-MB cache (uses one PCI slot); requires connection to DS-SSI14Rx (maximum seven disks supported per channel) or to DS-SL13R-xx (maximum 14 disks with single channel)	8	-	DS-KZPCC-AC
PCI to Fibre Channel adapter, 64-bit, single-channel (uses one PCI slot) **NOTE**: When used in a switched standalone or cluster environment, a maximum of four adapters is supported. When used in an arbitrated loop non-clustered environment, a maximum of one adapter is supported.	See **Note**	See **Note**	DS-KGPSA-CA (168794-B21)
Fibre Channel cable (BNGBX-xx) xx = 02, 05, 15, 30, 50 meters, x = 1 (02 m), 2 (05 m), 3 (15 m), 4 (30 m), 5 (50 m)			234457-B2x
PCI 1-port Ultra2 (LVD) SCSI adapter, 32-bit, single-channel (uses one PCI slot); includes internal 68-pin and external 68-pin HD connectors; requires BN38C-xx cable to connect adapter to Ultra2 shelf; HSZxx RAID controllers not supported. OpenVMS V7.1-2 requires Tima Kit: DEC-AXPVMS-VMS712_UPDATE-V0300—4.PCSI; Tru64 UNIX V4.0F requires Patch Kit2 BL13: DUV40FAS0002-19991116.tar	6	6	**3X-KZPCA-AA**
68-pin HD male-to-VHDCI male UltraSCSI cable; xx = 02, 03, 05, 10, 20, 25 m			BN38C-xx
PCI combo adapter – See Step 7	1	1	3X-DEPVZ-AA
PCI 2-port UltraSCSI single-ended adapter and 10/100 Mb Ethernet combo adapter (uses one PCI slot); includes internal 68-pin and 50-pin HD connectors and two external 68-pin VHDCI SCSI connectors, requires BN37A-xx cable to connect to single-ended UltraSCSI shelf	4	4	KZPCM-DA
VHDCI male-to-VHDCI male UltraSCSI cable, xx = 02, 2E [2.5], 03, 05, 10, 20 m			BN37A-xx
PCI 1-port UltraSCSI differential adapter (uses one PCI slot); includes external 68-pin HD connector, requires BN38C-xx cable (2 to 25 m) to connect adapter to differential UltraSCSI shelf or RAID controller	5	5	KZPBA-CB
68-pin HD male-to-VHDCI male UltraSCSI cable; xx = 02, 03, 05, 10, 20, 25 m			BN38C-xx
PCI 1-port UltraSCSI RAID controller with 4-MB cache memory (uses one PCI slot), includes RAID Array 230/Plus Subsystem software and documentation kit; includes VHDCI female connector; tape drives not supported; 18.2-GB disk drives not supported, requires BN37A-xx cable (0.3 to 20 m) to connect to single-ended UltraSCSI shelf	4	4	KZPAC-AA

Options

Step 10 – Storage Adapters/Controllers *(continued)*

	Maximum # Supported		
	Tru64 UNIX	**OpenVMS**	
PCI 3-port UltraSCSI RAID controller with 4-MB cache memory (uses one PCI slot), includes RAID Array 230/Plus Subsystem Software and documentation kit; tape drives not supported; 18.2-GB disk drives not supported; SCSI cable required for each active port; requires BN37X-xx cable (.3 to 20 m) to connect to single-ended UltraSCSI shelf, and BN31K-0E for external third port connection	4	4	KZPAC-CA
Same as KZPAC-CA with 8-MB cache memory	4	4	KZPAC-CB
Cache battery backup for KZPAC controller			KZPSC-UB
VHDCI male-to-VHDCI male UltraSCSI cable; xx = 02, 2E [2.5], 03, 05, 10, 20, 25 m **NOTE**: Manufacturing may substitute BN37A-02 cable for specific cabinet configurations.			BN37A-xx
SCSI cable/bulkhead assembly kit, supports one third-port connection from KZPAC-CA/CB, allows external connection of one third port			BN31K-0E
SCSI cable/bulkhead assembly kit, supports two third-port connections from KZPAC-CA/CB, allows external connection of two third ports			KZPAC-SB
PCI CI adapter for OpenVMS systems only; requires two PCI slots and CI cable for each adapter	-	2	CIPCA-BA
CI cable			BNCIA-xx
PCI DSSI controller for OpenVMS systems only; requires HSDxx controller to connect directly to StorageWorks shelf; requires BC29S-xx cable	-	4	KFPSA-AA
6' DSSI cable for connection to HSD10 installed in BA36R pedestal shelf			BC29S-06
9' DSSI cable for connection to HSD10 installed in BA36R cabinet shelf			BC29S-09

Options

Step 11 – Storage Devices – Optional

UltraSCSI Configuration Rules

- UltraSCSI configurations require UltraSCSI components (controllers, adapters, shelves, disks, and cables)
- UltraSCSI adapters and RAID controllers support UltraSCSI disks at UltraSCSI speeds in UltraSCSI top gun blue shelves (DS-BA356-xx)
- UltraSCSI and Fast10 drives can be mixed in DS-BA356 top gun blue UltraSCSI shelf; UltraSCSI adapter negotiates maximum transfer speed of drives

UltraSCSI StorageWorks Pedestals

- UltraSCSI top gun blue pedestals provide support for UltraSCSI disk drives; pedestals are available in single-bus or split-bus configurations and include a personality module and 180W power supply
- UltraSCSI shelf supports: seven 3.5″ hard disk drives, or one 5.25″ device and four 3.5″ hard disk drives, or two 5.25″ devices and one 3.5″ hard disk drive
- Installation of redundant power supply reduces number of 3.5″ drive slots by one

UltraSCSI single-ended pedestal, single-bus personality module, 180W power supply	DS-BA356-KF
UltraSCSI single-ended pedestal, split-bus personality module, 180W power supply	DS-BA356-KG
UltraSCSI pedestal, single-channel differential personality module, 180W power supply	DS-BA356-KH
180W power supply, includes 120V North American and 240V IEC power cord	DS-BA35X-HH

Tape Drives

- Tape drives require single-ended UltraSCSI adapter and country-specific power cord
- For more information on Compaq tape drives, see http://www.compaq.com/products/storageworks/sitemap.html - tapedrives
  NOTE: This website is available in English only.

AIT Tape Drives

35/70-GB 8 mm AIT LVD tabletop tape drive, North America; requires 3X-KZPCA-AA LVD adapter	216885-001
35/70-GB 8 mm AIT LVD tabletop tape drive, International; requires 3X-KZPCA-AA LVD adapter	216885-B31
35/70-GB 8 mm AIT LVD tabletop tape drive, Japan; requires 3X-KZPCA-AA LVD adapter	216885-291
35/70-GB 8 mm AIT SCSI tabletop tape drive with 120V North American power cord; requires 3X-KZPCA-AA or KZPBA-CA SCSI adapter	388507-001
35/70-GB 8 mm AIT SCSI tabletop tape drive, International; requires 3X-KZPCA-AA or KZPBA-CA SCSI adapter	388507-B31
50/100-GB 8 mm AIT SCSI tabletop tape drive with 120V North American power cord; requires 3X-KZPCA-AA Wide Ultra2 (LVD) adapter	157767-001
50/100-GB 8 mm AIT SCSI tabletop tape drive, International; requires 3X-KZPCA-AA Wide Ultra2 (LVD) adapter	157767-B31
35/70-GB AIT hot plug LVD Universal tape drive, uses two slots in BA610-2D or 43xxx shelves	3R-A2396-AA
50/100-GB AIT hot plug LVD Universal tape drive, uses two slots in BA610-2D or 43xxx shelves	3R-A2779-AA

AIT Tape Libraries

SSL2020 AIT library with one AIT 50-GB drive and 20 slots, rackmount, requires 3X-KZPCA-AA	175196-B21
SSL2020 AIT library with two AIT 50-GB drives and 20 slots, rackmunt, requires 3X-KZPCA-AA	175196-B22
Tabletop SSL2020 AIT library with one AIT 50-GB drive and 20 slots requires 3X-KZPCA-AA LVD adapter	175196-B21
Tabletop SSl2020 AIT library with two AIT 50-GB drives and 20 slots, requires 3X-KZPCA-AA LVD adapter	175196-B22

Step 11 – Storage Devices – Optional *(continued)*

DAT Tape Drives	12/24-GB 4 mm DAT narrow single-ended tabletop SCSI tape drive with 120V North American power cord; requires BN31W-xx SCSI cable and KZPBA-CA or KZPCM-DA adapter	DS-TLZ10-DB
	20/40-GB 4 mm DAT Wide Ultra2 (LVD) tabletop SCSI tape drive with 120V North American power cord; requires 3X-KZPCA-AA Wide Ultra2 (LVD) adapter	157770-001
	20/40-GB 4 mm DAT Wide Ultra2 (LVD) tabletop SCSI tape drive, International; requires 3X-KZPCA-AA Wide Ultra2 (LVD) adapter	157770-B31
	20/40-GB DAT auto loader external, North America	166505-001
	20/40-GB DAT auto loader external, International; requires BN31W-xx SCSI cable and KZPBA-CA or KZPCM-DA adapter	166505-B31
	20/40-GB DAT auto loader external, Japan	166505-291
	20/40-GB DAT DDS4 hot plug LVD Universal tape drive, uses two slots in BA610-2D or 43xxx shelves	3R-A2780-AA
DLT Tape Drives	35/70-GB DLT single-ended tabletop tape drive, requires BN21K-xx SCSI cable and KZPBA-CA or KZPCM-DA adapter	DS-TZ89N-TA
	Tabletop TL881 DLT mini-library with one DLT4000 tape drive; requires HVD KZPBA-CB adapter and SCSI cable	128667-B21
	Tabletop TL881 DLT mini-library with two DLT4000 tape drives; requires HVD KZPBA-CB adapter and SCSI cable	128667-B22
	Tabletop TL891 DLT mini-library with one TZ89N tape drive; requires HVD KZPBA-CB adapter and SCSI cable	120875-B21
	Tabletop TL891 DLT mini-library with two TZ89N tape drives; requires HVD KZPBA-CB adapter and SCSI cable	120875-B22
	Tabletop DLT8000 40/80-GB DLT external tape drive; requires 3X-KZPCA-AA LVD adapter	146197-B21
	Tabletop DLT8000 40/80-GB DLT external tape drive, Japan; requires 3X-KZPCA-AA LVD adapter	146197-291
Removable Media Devices for StorageWorks Shelves	• For maximum performance, tape libraries must be configured with Fast Wide Differential (FWD) controllers for tape backup • For more information on Compaq tape drives, see http://www.compaq.com/products/storageworks/sitemap.html - tapedrives **NOTE**: This website is available in English only.	
AIT Tape Drives	35/70-GB 8 mm AIT SCSI tape drive in 3.5″ StorageWorks carrier (BA36R or BA356 shelves)	DS-AIT35-VW
	SSL2020 AIT library with one AIT 50-GB drive and 20 slots, rackmount, LVD (Universal shelves)	175196-B21
	SSL2020 AIT library with two AIT 50-GB drives and 20 slots, rackmount, LVD (Universal shelves)	175196-B22
DAT Tape Drives	12/24-GB 4 mm DAT narrow SCSI tape drive in StorageWorks carrier (BA36R or BA356 shelves)	DS-TLZ10-VA
DLT Tape Drives	40/80-GB DLT8000 tape drive in StorageWorks carrier (BA36R or BA356 shelves)	DS-TZ90N-VW
	20/40-GB DLT single-ended tape drive in StorageWorks carrier (BA36R or BA356 shelves)	TZ88N-VA
	35/70-GB DLT single-ended tape drive in StorageWorks carrier (BA36R or BA356 shelves)	DS-TZ89N-VW
	DLT mini-library expansion unit with bar code reader, 16 cartridges, wide differential SCSI robotic controller with 68-pin HD female SCSI connector, universal mounting rails (Metric/RETMA)	DS-TL890-NE

Step 11 – Storage Devices – Optional *(continued)*

DLT Tape Libraries	MSL5026DLX or MSL5026SI, DLT/SDL tabletop library, 0 drives; all MSL 5026 libraries are supported with 3X-DEPVZ-AA and 3X-KZPCA-AA adapters	231838-B21
	MSL5026DLX, DLT tabletop library with one 40/80-GB DLT tape drive, LVD	231821-B21
	MSL5026DLX, DLT tabletop library with two 40/80-GB DLT tape drive, LVD	231821-B22
	MSL5026DLX or MSL5026SL, DLT/SDLT rackmount library, 0 drives	231979-B21
	MSL5026DLX, DLT rackmount library with one 40/80-GB DLT tape drives, LVD	231891-B21
	MSL5026DLX, DLT rackmount library with two 40/80-GB DLT tape drives, LVD	231891-B22
	MSL5026SL, SDLT tabletop library with one 110/220-GB SDLT tape drive, LVD	231822-B21
	MSL5026SL, SDLT tabletop library with two 110/220-GB SDLT tape drive, LVD	231822-B22
	MSL5026SL, SDLT rackmount library with one 110/220-GB DLT tape drives, LVD	231892-B21
	MSL5026SL, SDLT rackmount library with two 110/220-GB DLT tape drives, LVD	2311892-B22
	ESL198 DLX Enterprise tape libraries with two 40/80-GB tape drives (161265-B24/-B25/-B26/-B27/-28 for 8, 10, 12, 14, or 16 tape drives); requires KZPBA-CB	194993-B22
	TL891DLX DLT tabletop library with one DLT tape drive, LVD	157300-B21
	TL891DLX DLT tabletop library with two DLT tape drive, LVD	157300-B22
	TL891DLX DLT rackmount library with one DLT tape drive, LVD	157305-B21
	TL891DLX DLT rackmount library with two DLT tape drive, LVD	157305-B22
	Rackmount TL881 DLT mini-library with one DLT4000 tape drive; requires KZPBA-CB adapter	128668-B21
	Rackmount TL881 DLT mini-library with on DLT4000 tape drive; requires KZPBA-CB adapter	128668-B22

BA370 Rackmount Enclosure	• Mandatory rear cabinet extender ordered for systems installed in M-series cabinets (H9A10 and H9A15) allows two BA370 enclosures to be installed front to back in cabinet • Host adapter, RAID Array controller, ACS firmware, cache battery, cables, platform-specific Solutions Software Kit, and disk drives must be ordered separately	
	BA370 front mount rackmount enclosure with five 180W power supplies, includes RETMA rackmount kit; first BA370 enclosure must be front mounted in cabinet, 20U height	2T-BA370-AS
	BA370 rear mount rackmount enclosure with five 180W power supplies, includes RETMA rackmount kit; second BA370 enclosure must be rear mounted in cabinet, 20U height	2T-BA370-AR

Step 11 – Storage Devices – Optional *(continued)*

External Storage Solutions/Controllers	Modular Array 8000 Fibre Channel RAID storage solution, 60 Hz; includes one HSG80 controller with 256-MB cache, one M2200 controller shelf, three dual-bus disk shelves, two I/O ports, two power supplies	175992-B21 DS-SWXEB-CA
	Modular Array 8000 Fibre Channel RAID storage solution, 50 Hz; includes one HSG80 controller with 256-MB cache, one M2200 controller shelf, three dual-bus disk shelves, two I/O ports, two power supplies	175992-B22 DS-SWXEB-CB
	Enterprise Modular Array 12000 Fibre Channel RAID storage solution, 60 Hz	175993-B21
	Enterprise Modular Array 12000 Fibre Channel RAID storage solution, 50 Hz	175993-B22
	NOTE: For Modular Array 8000, and Enterprise Modular Array 12000 configuration and ordering information, see http://www.compaq.com/products/storageworks/raidstoragesystems.html **NOTE**: This website is available in English only.	
	Fibre Channel controller (HSG80), includes 64-MB cache; each HSG80 requires 128697-B21 HSG80 ACS V8.4F software kit for RAID Array and Enterprise Storage Array solutions	380671-B21
	Fibre Channel controller (HSG80), includes 256-MB cache; each HSG80 requires 128697-B21 HSG80 ACS V8.4F software kit for RAID Array and Enterprise Storage Array solutions	380672-B21
	UltraSCSI controller (HSZ80), includes 64-MB cache; requires 400569-001 for Tru64 UNIX or 400571-001 for OpenVMS for RAID Array and Enterprise Storage Array solutions	400564-B21
	UltraSCSI controller (HSZ80), includes 256-MB cache; requires 400569-001 for Tru64 UNIX or 400571-001 for OpenVMS for RAID Array and Enterprise Storage Array solutions	400565-B21

RA3000 RAID Array

- RAID Array 3000 (HSZ22) storage array is supported on AlphaServer TS20/40 systems (Tru64 UNIX V4.0F, V5.0A or higher and OpenVMS V7.x); supports KZPBA-CB adapter, minimum console V5.8
- For ordering information see: http://www.compaq.com/products/storageworks/raidstorage/RA3000ped_config.html **NOTE**: This website is available in English only.

RA8000, ESA12000 Ultra and RA8000, ESA12000 Fibre Channel

- RAID Array 8000 and ESA 12000 (HSZ80) storage arrays are supported on AlphaServer TS20/40 systems
- RAID Array 8000 FC and ESA 12000 FC (HSG80) storage arrays are supported on AlphaServer TS20/40 systems
- For ordering information see: http://www.compaq.com/products/storageworks/raidstoragesystems.html **NOTE**: This website is available in English only.

Step 12 – Networking Adapters/Controllers – Optional

- Adapters require a minimum of Tru64 UNIX V4.0F or OpenVMS V7.1-2
- Each adapter/controller uses one PCI slot
- See Step 7 for supported Ethernet adapters

NOTE: Ethernet adapter is not required if 3X-DEPVZ-AA or KZPCM is selected as SCSI adapter for StorageWorks shelf.

	Maximum # Supported		
	Tru64 UNIX	**OpenVMS**	
PCI FDDI adapter, single attachment station (SAS), multi-mode fiber (MMF), SC connector	4	4	3X-DEFPA-AC
PCI FDDI adapter, DAS, MMF, SC connector	4	4	3X-DEFPA-DC
MIC-SC dual fiber optic cable			BN34D-xx
SC-to-SC dual fiber optic cable			BN34B-xx
PCI FDDI adapter, DAS, TP-PMD	4	4	3X-DEFPA-MC
PCI FDDI adapter, SAS, TP-PMD, requires BN25H-03	4	4	3X-DEFPA-UC
3-m (9.8′) FDDI cross-over cable			BN25H-03
PCI 2-port intelligent synchronous controller OpenVMS systems require V7.1-2 and minimum of X.25 V1.5 with Kits; -DEC-AXPVMS-WANDD-V0105-1.1.PCSI -DEC-AXPVMS-X25-V0105-1.1.PCSI BC33x-xx cable required	4	4	3X-PBXDD-AA
PCI 4-port intelligent synchronous controller OpenVMS systems require V7.1-2 and minimum of X.25 V1.5 with Kits; -DEC-AXPVMS-WANDD-V0105-1-1.PCSI -DEC-AXPVMS-X25-V0105-1-1.PCSI BC33xx-xx cable required	4	4	3X-PBXDD-AB
PCI 4-port asynchronous controller; maximum two PBXDA-Ax per system (Tru64 UNIX systems require V4.0F)	2	2	PBXDA-AA
PCI 8-port asynchronous controller, cable included; maximum two PBXDA-Ax per system (Tru64 UNIX systems require V4.0F)	2	2	PBXDA-AB
PCI 16-port asynchronous controller, cable included; maximum two PBXDA-Ax per system (Tru64 UNIX systems require V4.0F)	2	2	PBXDA-AC
Asynchronous multi-port MUX expander XEM			CXI01-AB
Asynchronous MUX cable converter (RJ45-DB25)			CXI01-AC
Asynchronous MUX adapter (RJ45-MJ11), 8 pack			CXI01-AF
PCI-to-ATM 155 Mb adapter - Fiber	6	-	3X-DAPBA-FA
PCI-to-ATM 155 Mb adapter - UTP	6	-	3X-DAPBA-UA
PCI-to-ATM 622 Mb adapter - Fiber	4	-	3X-DAPCA-FA

Options

Step 13 – MEMORY CHANNEL – Optional

Tru64 UNIX Systems (V5.0A and later)	• Each system node in the cluster requires a TruCluster software license (QL-6BRAE-AA)
OpenVMS Systems	• OpenVMS V7.1-2 or later and OpenVMS Cluster license (QL-MUZAE-AA) are required
Configuring Information	• Up to two PCI-to-System Area Network adapters (CCMAB-AA) are supported in a single system. • For two-node clusters order a CCMAB-AA for each system and one BN39B-04 or BN39B-10 cable; cable connects directly to CCMAB-AA in each system. • For three or four system nodes, order one CCMAB-AA adapter, one BN39B-04 or BN39B-10 cable and one CCMHB-AA; make connections from the CCMAB-AA in a system to the CCMHB-AA. • CCMHB-AA includes four CCMLB-AA line cards and supports up to four nodes; expansion up to eight system nodes can be achieved by adding up to four CCMLB-AA line cards. • If two CCMAB-AAs are configured in each system, a second CCMHB-AA is required for three or more nodes; in two-node clusters, the CCMAB-AAs may be directly connected. • If nodes must be separated by a distance longer than standard copper cables allow, the CCMFB option converts the output of the standard CCMAB controller or CCMLB line card to single-mode fiber optic cable. The fiber optic connection may be up to 2,000 meters long between two CCMAB controllers connected in virtual hub mode, or 3,000 meters between a CCMAB controller and a CCMHB hub. (The connection from the CCMHB hub to a second system may also be 3,000 meters.) The CCMFB option requires a second PCI slot in the system from which it draws power only. It is normally connected to the corresponding CCMAB controller with the short BN39B-01 cable. The CCMFB is also used in the CCMHB hub where it occupies a slot normally used by the CCMLB line card, limiting expansion to four radial fiber optic connections. • CCMHB-BA hub expansion box provides additional slots for up to eight fiber optic connections. Two standard length single-mode fiber optic cables are available from Compaq (BN34R-10 and BN34R-31); however, users normally provide this fiber optic connection. Fiber optic connectivity is completely transparent to the systems using it and has no performance impact.

MEMORY CHANNEL Controller/System Area Network Hub	PCI-to-System Area Network Controller, maximum two	CCMAB-AA
	System Area Network Hub with four line cards; includes BN19P-2E power cord for Canada, Japan, and U.S. – for other regions, order appropriate power cord from the following list:	CCMHB-AA
	Hub expansion box with no line cards	CCMHB-BA
	Expansion line card for CCMHB hub	CCMLB-AA
	1-meter cable for CCMAB and CCMHB	BN39B-01
	4-meter cable for CCMAB and CCMHB	BN39B-04
	10-meter cable for CCMAB and CCMHB	BN39B-10
	Copper-to-single mode fiber optic converter	CCMFB-AA
	Rackmount kit for CCMHB hub	3X-BA61R-MC
	Power cord for rackmount CCMHB hub	BN35S-02

Step 13 – MEMORY CHANNEL – Optional *(continued)*

MEMORY CHANNEL Power Cords	Australia, New Zealand	103541-011 (U.S./Canada orders)
		BN19H-2E (Other country orders)
	Central Europe	BN19C-2E
	Denmark	103541-481 (U.S./Canada orders)
		BN19K-2E (Other country orders)
	Egypt, India	103541-AR1 (U.S./Canada orders)
		BN19S-2E (Other country orders)
	Ireland, United Kingdom	BN19A-2E
	Israel	BN18L-2E
	Italy	103541-461 (U.S./Canada orders)
		BN35M-02 (Other country orders)
	Switzerland	103541-511 (U.S./Canada orders)
		BN19E-2E (Other country orders)

Step 14 – Graphics Adapters – Optional

- RAID Configuration Utility is accessible via console port; optional graphics capability is available
- Select graphics adapter, monitor, and country-specific keyboard for Tru64 UNIX and OpenVMS systems if required

	Maximum # Supported		
	Tru64 UNIX	**OpenVMS**	
3Dlabs Oxygen VX1 32-MB PCI 2D graphics accelerator	1	1	SN-PBXGF-AB
PowerStorm 4D51T advanced 3D graphics accelerator	4	-	SN-PBXGI-AD
PowerStorm 300 3D multi-head graphics accelerator with 15-MB frame buffer memory and 16-MB texture memory; Patch Kit 1, Environmental Patch; V1.4 for multi-head (Kit Rev 4.0)	8	4	SN-PBXGD-AD
PowerStorm 350 3D multi-head graphics accelerator with 30-MB frame buffer memory and 32-MB texture memory; Patch Kit 1, Environmental Patch; V1.4 for multi-head (Kit Rev 4.0)	8	4	SN-PBXGD-AE

Options

Step 15 – Monitors – Optional

- Graphics monitors other than those listed can be used if compatible with SVGA graphics ordered with system
- Video extension cable required if monitor is located more than 1 meter from server
- Monitors will ship with, but not be integrated with systems.

Carbon/Silver Monitors	V570 15-inch (13.8-inch viewable image size) multiple-scan color monitor, VGA to 1024 x 768 @85 Hz, 0.28 mm DP, MPRII/Energy Star Compliant, Northern Hemisphere with NA power cord, VGA cable	3R-A3383-AA 228113-001
	Same as above with Euro-power cord, TCO99	3R-A3384-AA 228113-021
	Same as above, APD, no power cord, MPRII	3R-A3385-AA 228113-B22
	Same as above, PRC with power cord, CCIB	3R-A3386-AA 228113-AA1
	Same as above, Southern Hemisphere, with Australia/New Zealand power cord	3R-A3387-AA 228113-011
	Same as above, Equatorial, for Latin America with NA power cord	3R-A3704-AA 228113-B29
	P720 17-inch (16-inch viewable image size) auto-scanning color monitor, Diamondtron NF, 0.25 mm aperture grille pitch, VGA to 1280 x 1024 @85 Hz, MPRII/TCO 99/Energy Star Compliant, Northern Hemisphere with NA power cord, VGA cable	3R-A3388-AA 244373-001
	Same as above, with Euro-power cord	3R-A3389-AA 244373-021
	Same as above, APD, no power cord	3R-A3390-AA 244373-B24
	Same as above, PRC with power cord, CCIB	3R-A3391-AA 244373-AA1
	Same as above, Southern Hemisphere, with Australia/New Zealand power cord	3R-A3392-AA 244373-011
	P920 19-inch (18-inch viewable image size) auto-scanning color monitor, Diamondtron NF, 0.24 mm aperture grille pitch, VGA to 1600 x 1200 @85 Hz, MPRII/TCO 99/Energy Star Compliant, Northern Hemisphere with NA power cord, VGA cable	3R-A3393-AA 244375-001
	Same as above, with Euro power cord	3R-A3394-AA 244375-021
	Same as above, PRC with power cord, CCIB	3R-A3396-AA 244375-AA1
	Same as above, Southern Hemisphere, 0.25 to 0.27 mm aperture grille pitch, with Australia/New Zealand power cord	3R-A3397-AA 244375-011
	P1220 22-inch (20-inch viewable image size) auto-scanning color monitor, Diamondtron NF, 0.24 mm aperture grille pitch, VGA to 1792 x 1344 @85Hz, dual video input, USB Hub, MPRII/TCO 99/Energy Star Compliant, Northern Hemisphere with NA power cord, VGA cable	3R-A3398-AA 244374-001
	Same as above, with Euro power cord	3R-A3399-AA 244374-021
	Same as above, APD, no power cord	3R-A3400-AA 244374-B24
	Same as above, PRC with power cord, CCIB	3R-A3401-AA 244374-AA1
	Same as above, Southern Hemisphere, with Australia/New Zealand power cord	3R-A3402-AA 244374-011

Options

Step 15 – Monitors – Optional *(continued)*

Carbon/Silver Flat Panel Monitors	TFT8030, 18.1-inch (18.0-inch viewable image size) TFT flat panel monitor, 0.28 mm pixel pitch, 1280 x 1024 @75 Hz, multi-mode support, MPRII/TCO99/Energy Star compliant, six video input connectors (two VGA, two DVI-I, one S-video, and one C-video), NA power cord, VGA and DVI-I cables	3R-A3511-AA 234362-001
	TFT5030, 15.1-inch (15.0-inch viewable image size) TFT flat panel monitor, 0.30 mm pixel pitch, 1024 x 768 @75 Hz, multi-mode support, MPRII/TCO99/Energy Star compliant, two video input connectors (one VGA and one DVI-I), NA power cord, VGA and DVI-I cables	3R-A3353-AA 228134-001
Video Extension Cable	6 foot/1.8-meter video extension cable–optional	BN39C-02
Monitor Power Cords	North America	BN26J-1K
	Australia, New Zealand, 2.5-meter	103541-011 (U.S./Canada orders)
		BN19H-2E (Other country orders)
	Central Europe, 2.5-meter	BN19C-2E
	Denmark, 2.5-meter	103541-481 (U.S./Canada orders)
		BN19K-2E (Other country orders)
	Egypt, India, South Africa, 2.5-meter	103541-AR1 (U.S./Canada orders)
		BN19S-2E (Other country orders)
	Israel, 2.5-meter	BN18L-2E
	Italy, 2.5-meter	103541-461 (U.S./Canada orders)
		BN35M-02 (Other country orders)
	Japan, 2.5-meter, Dentori approved	3X-BN46F-02
	Switzerland, 2.5-meter	103541-511 (U.S./Canada orders)
		(BN19E-2E (Other country orders)
	UK, Ireland, 2.5-meter	BN19A-2E

Options

Step 16 – Keyboards, Power Cords, Documentation

Step 16a – Keyboards – Required for all non-North American systems

- Select a keyboard and mouse
- All keyboards listed may not be available in all geographies
- Select an opal OpenVMS keyboard and opal mouse for use with VT5xx text terminals.
- Systems ordered in North America include U.S. English keyboard; selection of country-specific keyboard is mandatory for all non-North American systems

	Opal	Carbon	
Keyboard/Language	**OpenVMS**	**Tru64 UNIX**	**OpenVMS**
U.S./English keyboard	LK461-A2	3R-LKQ48-AA	3X-LK462-A2
Arabic keyboard	-	3R-LKQ48-BR	-
Belgian keyboard	LK461-AB	3R-LKQ48-AB	3X-LK462-AB
BHCSY keyboard	-	3R-LKQ48-AX	-
Canadian/English keyboard	LK461-AQ	-	3X-LK462-AQ
Canadian/French keyboard	LK461-AC	3R-LKQ48-AC	3X-LK462-AC
Cyrillic keyboard (Russian)	LK461-BT	3R-LKQ48-BT	3X-LK462-BT
Czech keyboard	LK461-BV	3R-LKQ48-BV	3X-LK462-BV
Danish keyboard	LK461-AD	3R-LKQ48-AD	3X-LK462-AD
Dutch keyboard	LK461-AH	3R-LKQ48-AH	3X-LK462-AH
Finnish keyboard	LK461-AF	3R-LKQ48-AF	3X-LK462-AF
French keyboard	LK461-AP	3R-LKQ48-AP	3X-LK462-AP
German keyboard	LK461-AG	3R-LKQ48-AG	3X-LK462-AG
Greek keyboard	LK461-BH	3R-LKQ48-BH	3X-LK462-BH
Hebrew keyboard	LK461-AT	3R-LKQ48-AT	3X-LK462-AT
Hungarian keyboard	LK461-BQ	3R-LKQ48-BQ	3X-LK462-BQ
International keyboard	-	3R-LKQ48-BA	-
Italian keyboard	LK461-AI	3R-LKQ48-AI	3X-LK462-AI
Japanese keyboard	-	3R-LKQ48-AJ	-
Korean keyboard	-	3R-LKQ48-BK	-
Latin-American keyboard	-	3R-LKQ48-AR	-
Norwegian keyboard	LK461-AN	3R-LKQ48-AN	3X-LK462-AN
Polish keyboard	LK461-BP	3R-LKQ48-BP	3X-LK462-BP
Portuguese keyboard	LK461-AV	3R-LKQ48-AV	3X-LK462-AV
Romanian keyboard	LK461-BL	-	3X-LK462-BL
Simplified Chinese keyboard	-	3R-LKQ48-CV	-
Slovak keyboard	LK461-CZ	3R-LKQ48-CZ	3X-LK462-CZ
Spanish keyboard	LK461-AS	3R-LKQ48-AS	3X-LK462-AS
Swedish keyboard	LK461-AM	3R-LKQ48-AM	3X-LK462-AM
Swiss/French keyboard	LK461-AK	3R-LKQ48-AK	3X-LK462-AK
Swiss/German keyboard	LK461-AL	-	3X-LK462-AL
Traditional Chinese keyboard	-	3R-LKQ48-BI	-
Thai keyboard	-	3R-LKQ48-CB	-
Turkish keyboard	LK461-BU	3R-LKQ48-BU	3X-LK462-BU
Turkish/French keyboard	LK461-BW	-	3X-LK462-BW
UK keyboard	-	3R-LKQ48-AE	-
Yugoslavian keyboard	LK461-BY	-	3X-LK462-BY

Mouse	3-button mouse – opal	SN-PBQWS-WA
	3-button mouse – carbon	3R-A3480-AA

Options

Step 16 – Keyboards, Power Cords, Documentation *(continued)*

Keyboard or Mouse Extension Cable	6 foot/1.8 meter keyboard or mouse extension cable; to extend both keyboard and mouse order two cables	3X-BC34A-06

Step 16b – Power Cords

Power Cords

- Each system ordered in North America includes two, 120V or –48VDC power cords; selection of country specific power cords is mandatory for all non-North American systems. **Please contact product manager for additional information.**
- Additional power supply do not requires additional cord

Step 16c – Documentation

Additional AlphaServer TS20/40 System Information Kit (print), Owners Guide, User Interface Guide, and Release Notes	EK-TS42R-IN

Step 17 – Console Terminal – Optional

- Any terminal can be used as a console device
- Third-party console devices require an EIA-232 25-pin DSUB connector

VT510 video terminal; requires keyboard, H8575-x adapter, and BC16E-x cable	VT510-xx
Console cable, female connector (25-pin passive adapter)	H8575-A
Console cable, male connector (adapter with EOS, ESD, 25 POS D-SUB)	H8575-D

Step 18 – Software – Required selection of media and documentation for first system on site

- Software Processor Code = E

Tru64 UNIX

- AlphaServer TS20/40 Tru64 UNIX systems include Unlimited User license, Server Extension license, Internet Express, iPlanet Directory Server, iPlanet Enterprise Server, and Compaq Secure Web Server

When using Tru64 UNIX V5.0A or later	Tru64 UNIX media and online documentation on CD-ROM	QA-6ADAA-H8
	Tru64 UNIX full hard copy documentation	QA-6ADAA-GZ
	StorageWorks Software Package, with licenses for Logical Storage Manager and AdvFS Utilities	QB-5RXAE-AA
	TruCluster Server License	QL-6BRAE-AA
	Advanced Server for Tru64 UNIX, 25 client concurrent use license	QL-5U29M-3D
	Advanced Server for Tru64 UNIX, 50 client concurrent use license	QL-5U29M-3E
	Advanced Server for Tru64 UNIX, 100 client concurrent use license	QL-5U29M-3F
	Advanced Server for Tru64 UNIX, 250 client concurrent use license	QL-5U29M-3G
	Advanced Server for Tru64 UNIX, 500 client concurrent use license	QL-5U29M-3H
	Layered products media and documentation for Tru64 UNIX on CD-ROM	QA-054AA-H8
	DECnet/OSI extended function license for Tru64 UNIX	QL-MTJAE-AA
	DECnet/OSI end-system license for Tru64 UNIX	QL-MTKAE-AA
	Open3D for Tru64 UNIX on CD-ROM, includes graphics drivers	QA-OAFAA-H8

Step 18 – Software – Required selection of media and documentation for first system on site *(continued)*

OpenVMS

- AlphaServer TS20/40 OpenVMS systems include Base license with System Manager license and Compaq Enterprise Integration Server License Package for OpenVMS Revision V3.0A
- Compaq Enterprise Integration Package includes licenses for TCP/IP Services for OpenVMS, DECwindows Motif for OpenVMS Alpha, DECprint Supervisor for OpenVMS Alpha Plus, DECprint Supervisor for OpenVMS Open, DECnet-Plus for OpenVMS Alpha End System, Archive/Backup System for OpenVMS Management Tools, Archive/Backup Agent for Microsoft® Windows® NT™, OpenVMS Disk Services for Windows NT, Office Server for OpenVMS, PATHWORKS 32, PATHWORKS V6 for OpenVMS – Advanced Server, and DIGITAL Office Server Client Access License
- OpenVMS Concurrent Use licenses provide the right to interactively use the operating system by the specified number of concurrent users on a designated OpenVMS system. OpenVMS Concurrent Use licenses can be moved from one system to another at user discretion and can be shared in a mixed OpenVMS VAX and OpenVMS Alpha cluster.
- OpenVMS Traditional Unlimited Use license is system specific and can only be used on one system at a time. It cannot be shared between systems or in an OpenVMS VAX or OpenVMS Alpha Cluster.

Concurrent Use 1-user license	QL-MT3AA-3B
Concurrent Use 2-user license	QL-MT3AA-3C
Concurrent Use 4-user license	QL-MT3AA-3D
Concurrent Use 8-user license	QL-MT3AA-3E
Concurrent Use 16-user license	QL-MT3AA-3F
Concurrent Use 32-user license	QL-MT3AA-3G
Concurrent Use 64-user license	QL-MT3AA-3H
Concurrent Use 128-user license	QL-MT3AA-3J
Concurrent Use 256-user license	QL-MT3AA-3K
Traditional unlimited user license	QL-MT2AE-AA
OpenVMS V7.1-2 media and online documentation on CD-ROM	QA-MT1AR-H8
OpenVMS V7.2-1 media and online documentation on CD-ROM	QA-MT1AT-H8
OpenVMS media and documentation on CD-ROM	QA-MT1AA-H8
OpenVMS full hard copy documentation	QA-001AA-GZ
Layered products media and documentation for OpenVMS on CD-ROM, includes Enterprise Integration Server for OpenVMS media and documentation.	QA-03XAA-H8
DECnet extended function license for OpenVMS	QL-MTGAE-AA
DECnet end-system to extended function upgrade license for OpenVMS	QL-MTHAE-AA
OpenVMS Cluster license for Alpha systems	QL-MUZAE-AA
OpenVMS Volume Shadowing license	QL-2A1AE-AA

Step 19 – Service and Support – Optional

Compaq Services provides a wide range of service offerings, which are available as Statement of Work/Customized contracts. Contact you local Services Department for details and pricing. For information on Compaq service options available for AlphaServers and AlphaStations, consult a Compaq Sales Account Manager or visit http://www.compaq.com/services/
NOTE: This website is available in English only.

Technical Specifications

AlphaServer TS20/40 Physical Specifications	**Chassis**	Weight	130 lb (58.97 kg)
		Length	21.75 in (63.5 cm)
		Width	19.0 in (44.45 cm)
		Height	15.75 in (35.56 cm)

AlphaServer TS20/40 AC System Environmental Specifications	**Temperature**	Operating	50° to 104° F (10° to 40° C)
		Non-operating	–40° to 151° F (–40° to 66° C)
		Storage (60 days)	–40° to 151° F (–40° to 66° C)
		Rate of change	20° F/hr (11° C/hr)
	Relative humidity	Operating	20% to 80%
		Non-operating	20% to 80%
		Storage (60 days)	10% to 90%
		Rate of change	20%/hr
	Maximum wet bulb temperature	Operating	82° F (28° C)
		Storage (60 days)	115° F (46° C)
	Maximum dew point temperature	Operating	36° F (2° C)
	Heat dissipation	Nominal	900 W, 3074 BTU/hr
		Maximum	1300 W, 4440 BTU/hr
	Airflow and quality	Intake location	Front
		Exhaust location	Rear
		Particle size	N/A
		Concentration	N/A
	Altitude	Operating	10,000 ft (3,048 m)
		Non-operating	(40,000 ft (12,192 m)
	Vibration	Operating	10 to 500 Hz, 0.1 G peak
		Non-operating	5 to 300 Hz, 1.03 G rms

Technical Specifications

AlphaServer TS20/40 DC System Environmental Specifications	**Temperature**	Operating (continuous)	41° F to 104° F (5 to 40° C)
		Operating (short term)	41° F to 131° F (5 to 55° C)
		Non-operating	–40° to 158° F (–40 to 70° C)
		Rate of change	54° F/hr (30° C/hr)
	Relative humidity	Operating	5° to 90% (noncondensing)
		Non-operating	5° to 93%
	Maximum wet bulb temperature	Operating	89° F (32° C)
		Non-operating	102° F (39° C)
	Heat dissipation	Nominal	900 W, 3074 BTU/hr
		Maximum	1300 W, 4440 BTU/hr
	Airflow and quality	Intake location	Front
		Exhaust location	Rear
		Particle size	N/A
		Concentration	N/A
	Altitude	Operating	10,000 ft (3,048 m)
		Non-operating	40,000 ft (12,192 m)

AlphaServer TS20/40 DC Electrical Specifications	**Nominal voltage**	–48 VDC
	Operational voltage range	–36 to –72 VDC
	Input current (maximum)	27.1 A at –48 VDC
	Input power	1300 W

DC Design	Operating Temperature	Output Power	Input Voltage
Output power	(104° F to 131° F) 40° to 55° C (short term)	960 W	40 to 72 VDC
	41° F to 104° F (5° to 40° C)	900 W	36 to 40 VDC

Technical Specifications

AlphaServer TS20/40 AC Electrical Specifications	**Nominal voltage** (VAC)	100	120	200 to 240
	Voltage range (VAC) **temporary condition**	90 to 100	110 to 128	180 to 250
	Power source phase	Single	Single	Single
	Nominal frequency (Hz)	50/60	50/60	50/60
	Frequency range (Hz)	49 to 51/59 to 61	49 to 51/59 to 61	49 to 51/59 to 61
	RMS current (maximum steady state)	10.7 A	8.9 A	5.4 A
	Power Cords (2)	14 ft. 10 in/52 cm IEC 320 C13 to NEMA 5-15 (North America) or IEC320 C13 to IEC 320 C14 (other countries)		
	Cabinet Power Cords (2)	10 ft 10 in/30 cm 120 V non-removable NEMA L5-30P or 200-240 V non-removable IEC 309		

AC Design	Operating Temperature	Output Power	Input Voltage
Output power	41° F to 104° F (5° to 40° C)	960 W	100 to 270 VAC
	41° F to 104° F (5° to 40° C)	820 W	90 to 100 Vac

ALPHASERVER TS20/40 ACOUSTIC DATA

		L_{WAd}, B	L_{pAm}, dBA (bystander positions)
Acoustics — Declared Values per ISO 9296 and ISO 7779	**Idle**	6.6	48
	Operating	6.6	48

AlphaServer TS20/40 Regulatory Approvals	**Agency approvals**	UL: Listed to UL1950 (3rd edition) ULC FCC: Part 15.B Class A CE: EN55022, EN50082 VCCI Class II ITE BCIQ: CISPR22, CNS13438 c-Tick: CISPR22, AS/NZS 3548
	Reviewed to	AS/NZ 3260:1993 Australian/New Zealand Standard EN 60950/A4: 1997 European Norm IEC 950 (2nd edition, 4th amend)
	Other approvals/certification (DC version)	Bellcore NEBS GR-63-CORE Bellcore NEBS GR-1089-CORE11 Bellcore SR-3580

© 2002 Compaq Information Technologies Group, L.P. All rights reserved. Compaq, the Compaq logo, AlphaServer, CarePaq, Compaq Insight Manager, OpenVMS, StorageWorks, Tru64, and TruCluster are registered trademarks or trademarks of Compaq Information Technologies Group, L.P. in the U.S. and/or other countries. Microsoft, Windows and Windows NT are registered trademarks or trademarks of Microsoft Corporation in the U.S. and/or other countries. UNIX is a trademark of The Open Group in the U.S. and/or other countries. All other product names mentioned herein may be trademarks or registered trademarks of their respective companies.

Compaq shall not be liable for technical or editorial errors or omissions contained herein. The information is provided "as is" without warranty of any kind and is subject to change without notice. The warranties for Compaq products are set forth in the express limited warranty statements accompanying such products. Nothing herein should be construed as constituting an additional warranty.