Overview

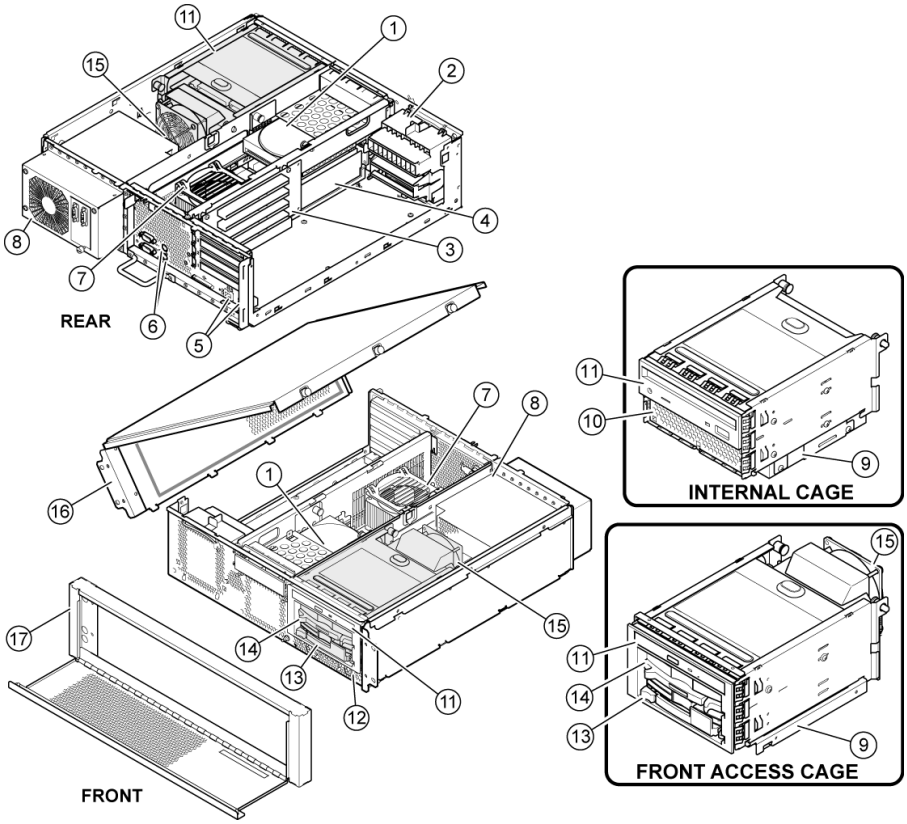

1. Concealed disk bay
2. Fan assembly
3. PCI riser card
4. Memory
5. Dual Ethernet ports
6. Keyboard and mouse ports
7. CPU and fan
8. Power Supply
9. System disk
10. Optional disk, DVD/CD-RW or tape bay
11. DVD/CD-RW
12. Control Panel
13. Front accessible disk
14. Optional front accessible disk
15. Disk fan
16. Top cover
17. Front bezel

At A Glance

AlphaServer TS15 NEBS-Certified 3U System includes:

- Alpha 1-GHz CPU with 2-MB onboard ECC cache
- Choice of 512-MB, 1-GB, or 2-GB SDRAM memory - expandable to 4-GB maximum memory capacity
- Onboard dual 10/100 BaseT Ethernet ports
- Four 64-bit PCI expansion slots
- Onboard Ultra160 SCSI controller
- Choice of storage cage subsystems:
  TS15 Internal Storage Cage: Includes half-height CD-ROM, one half-height bay available for either disk or tape system; internal card cage can be configured with three internal 3.5-inch x 1-inch hard disk drives or two internal 3.5-inch x 1-inch hard disk drives and one 5.25-inch x 1.6-inch removable media device
  TS15 Front Access Storage Cage: Includes slim-line DVD/CD-RW and two 3.5-inch x 1-inch hard disk drive bays or one Front Access Universal tape drive bay. TS15 Systems with a Front Access Storage Cage can be configured with two front access 3.5-inch x 1-inch hard disk drives and two internal 3.5-inch x 1-inch hard disk drives or one Front Access Universal tape drive (AIT or DAT) and two internal disk drives
- Two serial ports: COM1 port is both an RMC port with modem control and a full-duplex asynchronous communications port; COM2 port is a full-duplex asynchronous communications port
- PS/2-style keyboard port and mouse port
- 400W (-48VDC) power supply
- U.S. English documentation
- Tru64 UNIX or OpenVMS Factory Installed Software
- 90-day software product warranty
- Protected by HP Services, including one-year, on-site hardware with next business day response

Standard Features

Processor	Alpha 21264A 1-GHz processor	
Cache Memory	2-MB onboard cache	
Upgradability	Supports upgrades of memory and hard drives	
	Standard	One CPU
Memory	Standard	512 MB (one memory kit), 1 GB (one memory kit), or 2 GB (one memory kit) - Tru64 UNIX, OpenVMS
	Maximum	4 GB (two memory kits, each kit includes two industry-standard DIMMs with ECC support)
Network Controller	Onboard dual 10/100 BaseT Ethernet ports	
Expansion	Storage bays	**Internal Storage Cage Systems:** Four total - DVD/CD-RW (standard) and three storage bays, three internal 3.5-inch x 1-inch hard disk drives or two internal 3.5-inch x 1-inch hard disk drives and one 5.25-inch x 1.6-inch removable media device **Front Access Storage Cage Systems:** Five Total - DVD/CD-RW (standard) and four storage bays, two front access 3.5-inch x 1-inch hard disk drives and two internal 3.5-inch x 1-inch hard disk drives) or one 5.25-inch x 1.6-inch removable media device and two internal 3.5-inch x 1-inch hard disk drives
	PCI slots	Four full-length 64-bit/33-MHz slots or two full length 64-bit/66-MHz slots
Storage	DVD/CD-RW	**Internal Storage Cage Systems:** 5.25-inch half height DVD/CD-RW drive (standard) **Front Access Storage Cage Systems:** 24X slim-line DVD/CD-RW drive (standard)
	Hard Drives	36.4-GB and 72.8-GB Wide Ultra3 available with the Internal Storage Cage, 36.4-GB, 72.8-GB, or 146-GB Universal SCSI drives available with Front Access Storage Cage (10K rpm and 15K rpm available)
Storage Adapter/ Controller	Onboard Ultra160 dual-port SCSI controller, one port for internal storage and one port for external storage, plus choice of optional storage adapters/controllers (see Step 9)	
Expansion Ports	SCSI	One Ultra160
	Serial	Two ports, one serial port with full-duplex asynchronous modem control and one RMC dedicated serial port with full-duplex asynchronous modem control
	Keyboard	One PS/2-style port
	Mouse	One port
Power Supply	400W (-48VDC)	
Manageability	Hewlett-Packard Insight Manager	

Standard Features

OS Support	AlphaServer TS15 Tru64 UNIX systems include pre-installed software (V5.1B, PK3, New Hardware Delivery-8 (NHD-8), Base license, Unlimited User license, Server Extension license, Internet Express and Hewlett-Packard Secure Web Server AlphaServer TS15 OpenVMS systems include pre-installed software (V7.3-1), Base license with System Manager license and Enterprise Integration Server License Package for OpenVMS Minimum OS support: Tru64 UNIX V5.1B, PK3 New Hardware Delivery-8 (NHD-8) or OpenVMS V7.3-1 plus TIMA kit
Service and Support	Protected by HP Services, including a one-year, on-site hardware warranty with next business day response. Software warranty is a 90-day telephone advisory. Training, consulting, network integration, software support, comprehensive system maintenance and guaranteed uptime services are also available for customers requiring higher levels of service and support.

Step 1 – Select system

AlphaServer TS15 1-GHz systems require the **mandatory** selection of the following items:

- Memory, one Storage Cage (either Internal Storage Cage or Front Access Storage Cage), and one system disk
- Software media and documentation for first system on site
  Minimum OS support: Tru64 UNIX V5.1B New Hardware Delivery-8 (NHD-8) or OpenVMS V7.3.1 plus TIMA kit

AlphaServer TS15 1-GHz Base Systems							
OS	CPU	Memory	PCI	2-10/100t Ethernet Ports	Hard Drive	Storage Cage	Order Number
Tru64 UNIX	1 GHz	Mandatory	4	Onboard	Mandatory	Mandatory	DA-T15BA-AA
OpenVMS	1 GHz	Mandatory	4	Onboard	Mandatory	Mandatory	DY-T15BA-AA

Step 2 – Memory - Mandatory

- Maximum 4-GB memory
- Maximum two memory kits per system - each kit includes two industry-standard DIMMs with ECC support

512-MB memory kit, two 200-pin, 133-MHz, 256-MB DIMMs	3X-MS315-EA
1-GB memory kit, two 200-pin, 133-MHz, 512-MB DIMMs	3X-MS315-FA
2-GB memory kit, two 200-pin, 133-MHz, 1-GB DIMMs	3X-MS315-GA

Step 3 - Select Storage Cage - Mandatory

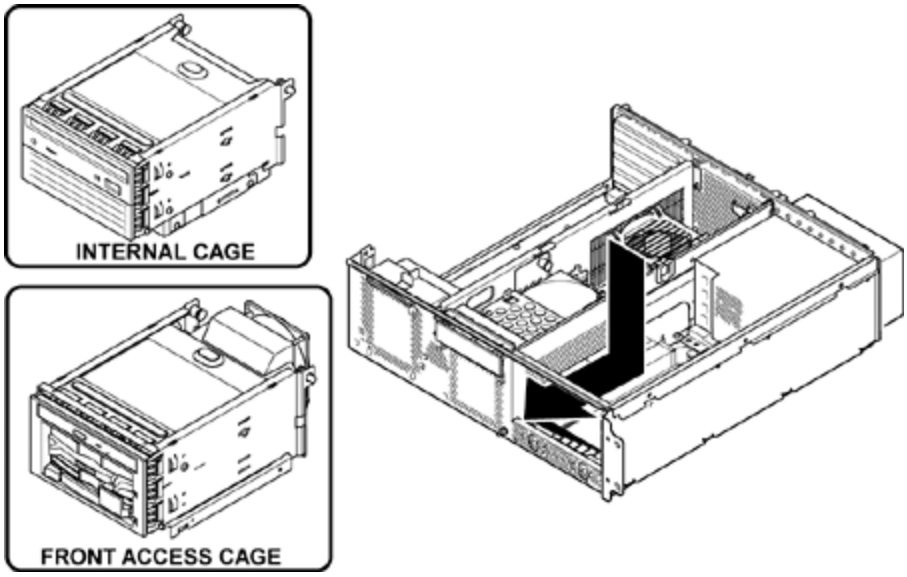

- TS15 Systems support **one** Storage Cage
- Selection of one Storage Cage is **mandatory (no exceptions)**
- TS15 Internal Storage Cage: TS15 System with Internal Cage supports three storage devices: 3X-BA15A-AA
  - Either three internal hard disk drives **or** one 5.25-inch half height device and two internal hard disk drives
- TS15 Front Access Storage Cage: TS15 System with Front Access Cage supports up to four storage devices: 3X-BA15B-AA
  - Two HP Universal disk drives plus two internal disk drives, **or**
  - One Front Access Universal Tape Drive (AIT or DAT) and two internal disk drives

Step 3a - Internal Storage Cage

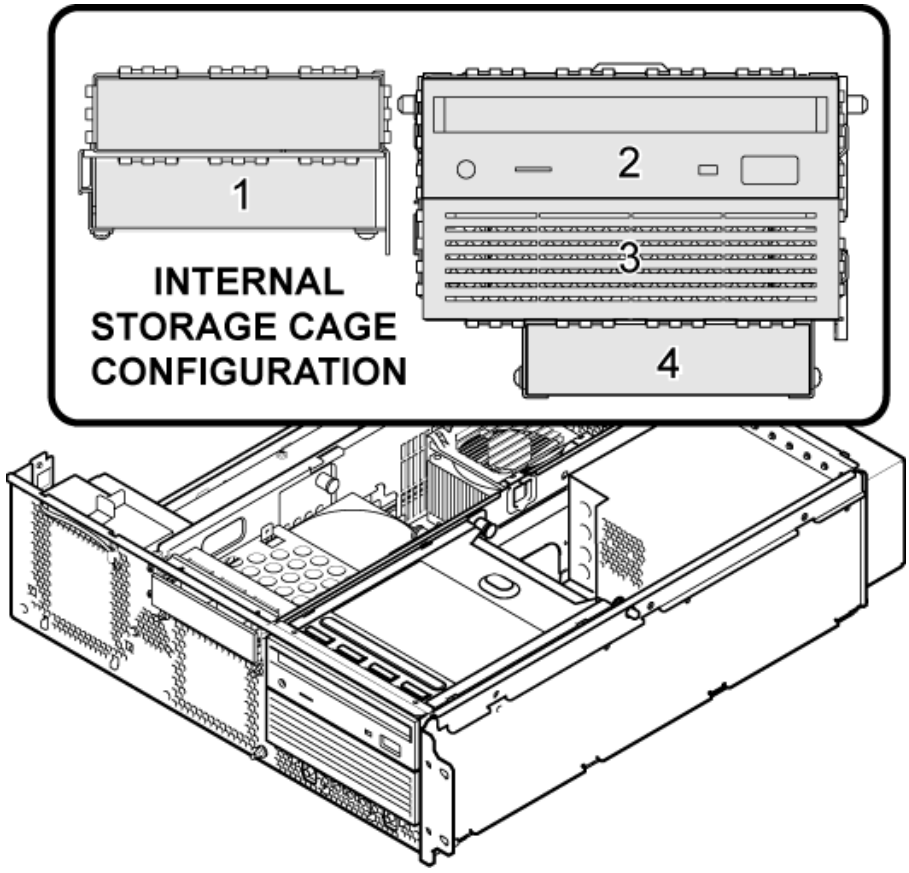

1. Internal Drive Bay
2. DVD/CD-RW
3. Second DVD/CD-RW, tape drive, or Internal Drive Bay
4. Internal Drive Bay

TS15 Storage Configuration Rules with Selection of Internal Storage Cage

- TS15 Systems configured with the Internal Storage Cage include a half height DVD/CD-RW in dedicated drive slot
- TS15 Systems configured with the Internal Storage Cage include three available storage bays (one in the Storage cage plus two in the system box) that can be configured as follows:
  - Maximum of three internal disk drives (3.5-inch x 1-inch drives) or
    two internal disk drives (3.5-inch x 1-inch) and one 5.25-inch half height removable media device

Step 3b - Front Access Storage Cage

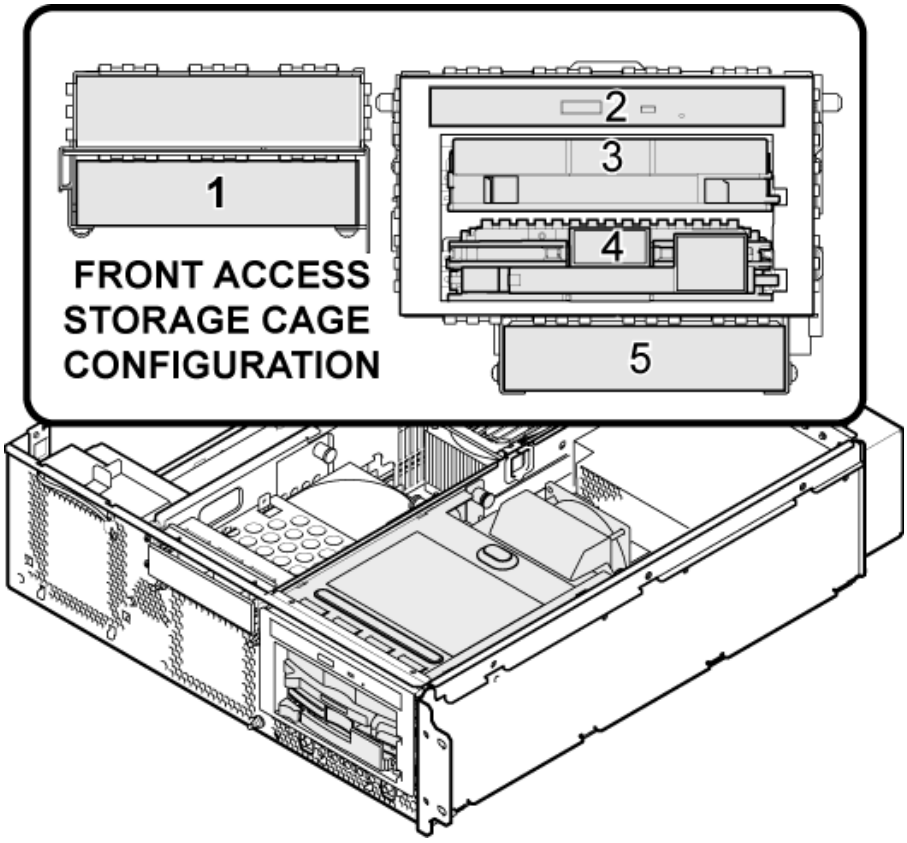

1. Internal drive bay
2. DVD/CD-RW
3. Front accessible drive bay
4. Front accessible drive bay
5. Internal drive bay

TS15 Storage Configuration Rules with Selection of Internal Storage Cage:

- TS15 Systems configured with the Internal Storage Cage include a half-height DVD/CD-RW in dedicated drive slot
- TS15 Systems configured with the Front Access Storage Cage include four storage bays (two HP Universal SCSI disk drives and two internal SCSI drives) that can be configured as follows:
  - Maximum of two internal disk drives (3.5-inch x 1-inch drives) and two HP Universal disk drives (3.5-inch x 1-inch) or one Front Access Universal tape drive (DAT) and two internal disk drives
  - SCSI cable with connections to the four disk drives is included with the Front Access Storage Cage

Step 4 - Mandatory Selection of Disk Drive

Internal SCSI Disk Drives (For Drives Internal to System Enclosure)	36.4-GB 10,000 rpm Ultra3 SCSI drive	DS-RZ3FD-WA
	72.8-GB 10,000 rpm Ultra3 SCSI drive	DS-RZ3GA-WA
Internal SCSI Disk Drives (For Internal Storage Cage)	36.4-GB 10,000 rpm Ultra3 SCSI drive	DS-RZ3FD-WA
	72.8-GB 10,000 rpm Ultra3 SCSI drive	DS-RZ3GA-WA
Universal Disk Drives (For Front Access Storage Cage)	18.2-GB Ultra320 SCSI 15,000 rpm 1-inch Universal disk drive	3R-A3848-AA
	36.4-GB Ultra320 SCSI 10,000 rpm 1-inch Universal disk drive	3R-A3838-AA
	36.4-GB Ultra320 SCSI 15,000 rpm 1-inch Universal disk drive	3R-A3849-AA
	72.8-GB Ultra320 SCSI 10,000 rpm 1-inch Universal disk drive	3R-A3839-AA
	72.8-GB Ultra320 SCSI 15,000 rpm 1-inch Universal disk drive	3R-A3851-AA
	146-GB Ultra320 SCSI 10,000 rpm 1-inch Universal disk drive	3R-A3841-AA
	300-GB Ultra320 SCSI 10,000 rpm 1-inch Universal disk drive	3R-A4952-AA

Step 5 - NEBS-Certified Options

Internal/External Tapes	DAT72 internal tape drive kit (Q1525A)	3R-A4544-AA
	DAT72 external tape drive kit, U.S. (Q1527)	3R-A4545-AA
	DAT72 external tape drive kit, International (Q1528)	3R-A4546-AA
	DAT72 hot-plug tape drive kit (Q1529)	3R-A4547-AA
	Optional 48X half-height DVD/CD-RW combo, carbon black; supported in Internal Storage Cage only not supported in Front Access Storage Cage	3X-A4412-BA
Universal Disk Drives (For Front Access Storage Cage)	36.4-GB Ultra320 SCSI 10,000 rpm 1-inch Universal Disk Drive	3R-A3838-AA
	36.4-GB Ultra320 SCSI 15,000 rpm 1-inch Universal Disk Drive	3R-A3849-AA
	72.8-GB Ultra320 SCSI 10,000 rpm 1-inch Universal Disk Drive	3R-A3839-AA
	72.8-GB Ultra320 SCSI 15,000 rpm 1-inch Universal Disk Drive	3R-A3851-AA
	146-GB Ultra320 SCSI 10,000 rpm 1-inch Universal Disk Drive	3R-A3841-AA
Internal SCSI Disk Drives (For Drives Internal to System Enclosure)	36.4-GB 10,000 rpm Ultra3 SCSI drive	DS-RZ3FD-WA
	72.8-GB 10,000 rpm Ultra3 SCSI drive	DS-RZ3GA-WA
StorageWorks Shelves Supported in NEBS Series Cabinets with/without Front Doors	14-slot model 4414R Ultra320 one-bus shelf, -48VD NEBS	3X-NS32R-TA
	14-slot model 4454R Ultra320 two-bus shelf, -48VD NEBS	3X-NS32R-TB
1U IPFM Alarm Panel Single Unit	The Intelligent Peripheral Fault Manager (IPFM) is the fault management component of the AlphaServer Intelligent Peripheral (IP) Platform that provides a full suite of voice, communications, management, processing, and storage resources that can be accessed and controlled by software running on the platform. The AlphaServer Intelligent Peripheral Platform is intended for use in telecommunications networks and environments, supporting real-time communications services and applications. Complete assembly with one control unit -- Capable of monitoring four AlphaServers.	2T-IPF1U-01
FRU 1U Alarm Module Replacement Unit	Module upgrade for a second unit or FRU	2T-IPF1U-00
Cable - used to connect PCI Adapter to Unit	Cable Assembly, CI BUS, ASIP2 (cable is supplied with 2T-IPF1U-00)	17-04675-01

Options

	Maximum # Supported		
PCI Adapters	Tru64 UNIX	OpenVMS	
PCI Fault Management Control Module (IPFM V3.0A) - one adapter per system	1	0	3X-KPCON-AA
PCI 1-port Ultra2 SCSI (LVD) single-ended adapter, 68-pin HD connector, requires BN38C cable (2 to 20 meters) to connect to single-ended UltraSCSI shelf	2	2	3X-KZPCA-AA
PCI 2-channel LVD multi-mode Ultra3 SCSI adapter, VHDCI, requires use of Ultra160 SCSI cables. NOTE: No SDLT tape/library support.	2	2	3X-KZPEA-DB
Ultra160 SCSI cables xx=02 for 6 feet, 03 for 12 feet, 04 for 24 feet			3X-BC56J-xx
PCI 1-port UltraSCSI differential adapter; includes external 68-pin HD connector; requires BN38C-xx cable (2-25 meters) to connect adapter to Differential UltraSCSI shelf or RAID controller. NOTE: Internal connection is not supported.	2	2	3X-KZPBA-CC
68-pin HD male-to-VHDCI male UltraSCSI cable; required for each external UltraSCSI shelf attached to KZPBA-CA/CB adapter			BN38C-xx
PCI (32-/64-bit, 33-/66-MHz) dual-port 10/100 Ethernet (UTP/RJ45s) NIC and Base Module. (One 3X-DE602-TA or 3X-DE602-FA optional add-on daughter card can be combined with this module.) Maximum two per system, maximum ten 10/100 Ethernet ports per system. Use BN25G, BN26M, BN24Q, or BN28Q twisted pair RJ45 cables. NOTE: Two 10/100 Ethernet ports included with TS15 system.	2	2	3X-DE602-BB
Dual-port 10/100 Ethernet (UTP/RJ45) add-on daughter card for use with the 3X-DE602-BB only. The combined 3X-DE602-BB and 3X-DE602-TA modules provide four 10/100 (UTP/RJ45s) ports in a single PCI slot option and allow a maximum of 16 ports per system. Maximum two per system, maximum ten 10/100 Ethernet ports per system. Use BN25G, BN26M, BN24Q, or BN28Q twisted pair RJ45 cables. NOTE: The 3X-DE602-TA cannot be used standalone. • OpenVMS V7.3 requires Tima Kit: DEC-AXPVMS-VMS73_LAN-V0100-4.PCSI • OpenVMS V7.2-2H1 requires OpenVMS Tima Kit located at: http://ftp.support.compaq.com/patches/.new/openvms.shtml NOTE: Two 10/100 Ethernet ports included with TS15 system.	2	2	3X-DE602-TA
IN7 Connectivity --- HP 4 P E1/T1/J1 ATM UN	4	4	DNBE1-AQ
IN7 Connectivity --- Low Perf 4 P EI/T1/J1/ATM	4	4	DNBE1-BQ
Quad T1 ISDN W-96 Channel Voice Card	4	4	2T-VCQQU-US
Quad E1 ISDN IFC 120 Channel Voice Card	4	4	2T-VCQQF-EU
NOTE: For more information on the above products, see http://www.hp.com/communications/opencall NOTE to SALES: For ordering and configuration assistance on the above products, see http://ocbu-bid.corp.hp.com/index.htm			
1-port PCI-X/PCI to 10/100/1000 UTP Ethernet NIC	2	2	3X-DEGXA-TB
ATI RADEON 7500 64-MB PCI 2D/3D Graphics Accelerator plus ATI RADEON NEBS kit NOTE: Slot 0 must be used for this configuration.	1	1	3X-PBXGG-TA
Memory Channel Adapter, 5.0/3.3 PCI-to-Memory Channel II compatible	2	2	CCMAB-BA

Step 6 - Tape Drives - Optional - Non-NEBS Qualified

Internal Tape Drives	DAT 36/72-GB DDS5 tape drive	3R-A4544-AA
	DAT 20/40-GB tape drive, LVD, carbon black	3R-A4752-AA
Universal Tape Drives (For Front Access Storage Cage)	DAT 36/72-GB DDS5 Universal tape drive	3R-A4547-AA
	DAT 20/40-GB Universal tape drive, LVD, uses two slots	3R-A4745-AA

Step 7 - DVD-ROM Drive - Optional

	Half-height DVD/CD-RW combo, carbon black - Supported in Internal Storage Cage only - not supported in Front Access Storage Cage.	3R-A4412-AA

Step 8 - NEBS Cabinet

Step 8a - Cabinets - Optional

- NEBS cabinet enclosure supports up to ten TS15 systems (3X-H9705) (30-56433-0X)
- Factory integration required

Cabinet Configuration Chart for AlphaServer TS15 Rackmount Systems

- Each system includes a TS15 NEBS Rackmount Kit
- 3X-NS32R-TA/TB Model 4414R Ultra320 single-bus/dual-bus, -48VDC

Cabinet Configuration Chart for AlphaServer TS15 (3U) Rackmount Systems with Disk Shelves (3U)

NEBS Cabinet	System Rack Kit per TS15 system	NEBS Cabinet Height/Space	TS15 Systems	StorageWorks 3X-NS32R-XX Disk Shelves
3X-H9705-AB	Included	40U carbon black	1 or 2	6
3X-H9705-BB	Included	37U carbon black/ without front door	3 or 4	6
34-56433-07	Included	37U sable gray/with front door	5	6
3X-H7603-AB	Power distribution unit		Maximum 6 with redundancy	

NOTE: Power cord included with system kernel. If customization is required contact HP Services.
Additional PDU may be required if additional TS15 systems or storage arrays are configured.

StorageWorks Shelves Supported in NEBS series Cabinets with/ without Front Doors	14-slot Model 4414R Ultra320 one bus, -48VD NEBS	3X-NS32R-TA
	14-slot Model 4454R Ultra320 two bus, -48VD NEBS	3X-NS32R-TB

Step 9 - External Storage - Optional

Storage Controllers/Host Bus Adapters for StorageWorks Pedestals and Shelves

- Storage controllers require a minimum operating system revision of Tru64 UNIX V5.1A NHD8 or OpenVMS V7.3-1 plus TIMA kit unless noted otherwise.
- Each storage controller/adapter uses one PCI slot

	Maximum # Supported		
	Tru64 UNIX	OpenVMS	
PCI/PCI-X to 2-Gb Fibre Channel adapter, 64-bit/133 MHz, single-channel (302784-B21) PCI V2.2 compatible	2	2	DS-KGPSA-EA
Fibre Channel cable			BNGBX-xx
PCI 1-port Ultra2 SCSI (LVD) single-ended adapter, 68-pin HD connector, requires BN38C cable (2 to 20 meters) to connect to single-ended UltraSCSI shelf	2	2	3X-KZPCA-AA
68-pin HD male-to-VHDCI male UltraSCSI cable; required for each external UltraSCSI shelf attached to KZPCA-AA adapter			BN38C-xx
PCI 2-channel LVD multi-mode Ultra3 SCSI adapter, VHDCI, requires use of Ultra160 SCSI cables. NOTE: No SDLT tape/library support.	2	2	3X-KZPEA-DB
Ultra160 SCSI cables, xx=02 for 6 feet, 03 for 12 feet, 04 for 24 feet			3X-BC56J-xx
PCI 1-port UltraSCSI differential adapter; includes external 68-pin HD connector; requires BN38C-xx cable (2-25 meters) to connect adapter to Differential UltraSCSI shelf or RAID controller. NOTE: Internal connection is not supported.	2	2	3X-KZPBA-CC
68-pin HD male-to-VHDCI male UltraSCSI cable; required for each external UltraSCSI shelf attached to KZPBA-CA/CB adapter			BN38C-xx
PCI 2-port PCI to Ultra3, 64-bit, 66-MHz, LVD backplane RAID controller with 128-MB cache (uses one PCI slot); requires connection to DS-SL13R-xx shelves. Requires use of Ultra160 SCSI cables. NOTE: Host-based volume shadowing or shared bus support not supported under OpenVMS.	-	2	3X-KZPDC-BE
PCI 4-port PCI to Ultra3, 64-bit, 66-MHz, LVD backplane RAID controller with 256-MB cache (uses one PCI slot); requires connection to DS-SL13R-xx shelves. Requires use of Ultra160 SCSI cables. NOTE: Host-based volume shadowing or shared bus support not supported under OpenVMS.	-	2	3X-KZPDC-DF
Ultra160 SCSI cables xx=02 for 6 feet, 03 for 12 feet, 04 for 24 feet			3X-BC56J-xx

StorageWorks Fibre Channel Switches	NOTE: For more information on the following switches, refer to http://h18000.www1.hp.com/products/quickspecs/10457_na/10457_na.HTML NOTE: This Web site is available in English only.	
	Fibre Channel SAN Switch, 8-ports, 2-Gb, with Fabric Operating Software (322120-B21) BS	DS-DSGGD-BC
	Fibre Channel SAN Switch, 8-ports, 2-Gb, with Fabric Operating Software (322121-B21) PP	DS-DSGGD-CC
	Fibre Channel SAN Switch, 16-ports, 2-Gb, with Fabric Operating Software (322118-B21)	DS-DSGGD-CA
	Fibre Channel SAN Switch, 16-ports, 2 Gb, with Fabric Operating Software, two power supplies (Tru64 UNIX and OpenVMS) - requires Tru64 UNIX V5.1A patch kit: T64V51AB01AS0001-20020116.tar (322119-B21) PP	DS-DSGGD-CB
	Fibre Channel 2-Gb 32-port Core Switch, with Fabric Operating software (240603-B21) BB	DS-DSGGD-AB
	Fibre Channel 2-Gb 64-port Core Switch, with Fabric Operating software (332177-B21) BS	DS-DSGGE-BA
	Fibre Channel 2-Gb 64-port Core Switch, with Fabric Operating software (322178-B21) DP	DS-DSGGE-CA
McData 64-port Fibre Channel SAN Director Class Switch	SAN Director 2 Gb, 64 ports (286809-B21)	DS-DMGGD-BA
	SAN Edge Switch 2 Gb, 24 ports (316095-B21)	DS-DMGGE-BD
	SAN Edge Switch 2 Gb, 140-ports (316093-B21)	DS-DMGGD-CA
	SAN Edge Switch 2 Gb, 32-ports (286810-B21)	DS-DHGGE-BC
	NOTE: Connection for, or between, 1-Gb and/or 2-Gb SAN switches require different cables. Refer to the Switches, Hubs, and Interconnects QuickSpecs at: http://h18000.www1.hp.com/products/quickspecs/North_America/10490.html.	
Fibre Channel Disk Drives	36-GB 10K rpm dual-port 2-Gb/sec FC-AL 1-inch (25.4mm) drive (238590-B21)	3R-A3239-AA
	72-GB 10K rpm dual-port 2-Gb/sec FC-AL 1-inch (25.4mm) drive (238921-B21)	3R-A3260-AA
	36-GB 15K rpm dual-port 2-Gb/sec FC-AL 1-inch (25.4mm) drive (236205B21)	3R-A3210-AA
	72-GB 15K rpm dual-port 2-Gb/sec FC-AL 1-inch (25.4mm) drive (293568-B21)	3R-A3971-AA
	146-GB 10K rpm dual-port 2-Gb/sec FC-AL 1-inch (25.4mm) drive (293556-B21)	3R-A3975-AA

Step 10 - UltraSCSI RAID Array Controllers & UltraSCSI RAID Packaged Solutions - Optional

msa1000	msa1000 SAN Storage Array (201723-B22)	3R-A4328-AA

StorageWorks Disk Array Family

NOTE: The HP StorageWorks Disk Array Family, specifically the XP128 and XP1024, are supported on AlphaServer TS15 systems. For product and ordering information, refer to the following Web pages:
http://www.hp.com/products1/storage/products/disk_arrays/highend/xp1024/index.html
http://www.hp.com/products1/storage/products/disk_arrays/highend/xp128/index.html
The following part numbers have been assigned for reference purposes only:

3R-A4417-AA	A7876A	XP128 Disk Array Control Frame
3R-A4418-AA	A7906A	XP1024 Disk Array Control Frame

Step 11 - Networks and Communications - Optional

- Reference individual product information for operating system support.
- Systems include dual embedded 10/100 BaseT Ethernet ports (BN25G-xx cable must be ordered separately)
- Additional Ethernet ports can be added using available PCI slots

	Maximum # Supported		
	Tru64 UNIX	OpenVMS	
Ethernet 10/100			
Single-port 100Mbps (MMF/duplex-SC) add-on daughter card for use with 3X-DE602-BB. The combined 3X-DE602-BB 3X-DE602-FA provides two 10/100 (UTP/RJ45s) and one 100Mbps (MMF/SC) ports in a single PCI slot option. Maximum two per system, maximum ten 10/100 Ethernet ports supported per system. Use BN34A or BN34B cables. NOTE: The 3X-DE602-TA cannot be used standalone. Two 10/100 Ethernet ports included with TS15 system.	2	2	3X-DE602-FA
PCI (32-/64-bit, 33-/66-MHz) dual-port 10/100 Ethernet (UTP/RJ45s) NIC and Base Module. (One 3X-DE602-TA or 3X-DE602-FA optional add-on daughter card can be combined with this module.) Maximum two per system, maximum ten 10/100 Ethernet ports per system. Use BN25G, BN26M, BN24Q, or BN28Q twisted pair RJ45 cables. NOTE: Two 10/100 Ethernet ports included with TS15 system.	2	2	3X-DE602-BB
Dual-port 10/100 Ethernet (UTP/RJ45) add-on daughter card for use with the 3X-DE602-BB only. The combined 3X-DE602-BB and 3X-DE602-TA modules provide four 10/100 (UTP/RJ45s) ports in a single PCI slot option; allows for a maximum of 16 ports per system. Maximum two per system, maximum ten 10/100 Ethernet ports per system. Use BN25G, BN26M, BN24Q, or BN28Q twisted pair RJ45 cables. NOTE: The 3X-DE602-TA cannot be used standalone. • OpenVMS V7.3 requires Tima Kit: • DEC-AXPVMS-VMS73_LAN-V0100-4.PCSI • OpenVMS V7.2-2H1 requires OpenVMS Tima Kit located at: http://ftp.support.compaq.com/patches/.new/openvms.shtml NOTE: Two 10/100 Ethernet ports included with TS15 system.	2	2	3X-DE602-TA
Cable for 10BaseT twisted pair connection			BN25G-xx
Gigabit Ethernet			
1-port PCI-X/PCI to MMF Gbe NIC	2	2	3X-DEGXA-SA
1-port PCI-X/PCI to 10/100/1000 UTP Ethernet NIC	2	2	3X-DEGXA-TB
ATM			
PCI (32-bit, 33-MHz) to 155 Mbps ATM fiber NIC with SC connector. Use BN34B-xx cable.	2	2	3X-DAPBA-FA

Options

Asynchronous Communications (ASYNC)			
PCI (32-bit, 33-MHz) to quad-port Async Communications NIC with DB-25 octopus cable	2	2	PBXDA-BA
PCI (32-bit, 33-MHz) to 8-port Async Communications NIC with DB-25 octopus cables	2	2	PBXDA-BB
PCI 16-port asynchronous controller, cable included; maximum three PBXDA-Ax per system	2	2	PBXDA-AC
PBXDA-AC Asynchronous Connector Adapters			
RJ45 to DB-25 converter cable			CXI01-AC
RJ45 to DEC MJ11 converter cable (8 pack)			CXI01-AF
Synchronous Communications (SYNC)			
PCI (32-bit, 33-MHz) to dual-port intelligent synchronous communications NIC. Requires at least one (maximum two) BN34x synchronous cable listed below.	2	2	3X-PBXDD-AA
PCI (32-bit, 33-MHz) to quad-port intelligent synchronous communications NIC. Requires at least one (maximum four) BN34x synchronous cable listed below.	2	2	3X-PBXDD-AB

Synchronous-Specific Cables		
EIA-530 single-port cable		3X-BC34G-06
V.24/EIA-232 single-port cable		3X-BC34L-06
V.11/x.21 single-port cable		3X-BC33S-06
V.35 single-port cable		3X-BC34T-06
Ethernet, FDDI, ATM Multi-use Cables		
Multimode fiber optic (MMF) 62.5/125um duplex cable, with SC-to-ST connectors. xx = available lengths: (2E, 4E, 01, 03, 10, 20, 30) for 2.4, 4.5, 1, 3, 10, 20, 30 meters		BN34A-xx
Multimode fiber optic (MMF) 62.5/125um duplex cable, with SC-to-SC connectors. xx = available lengths: (2E, 4E, 01, 03, 10, 20, 30) for 2.4, 4.5, 1, 3, 10, 20, 30 meters		BN34B-xx
Category 5e (4-Unshielded Twisted Pairs / UTP) straight-through cable with RJ45-to-RJ45 connectors for system to switch, repeater, or hub connectivity. xx = available lengths: (0B, 0E, 01, 03, 04, 07) for 0.2, 0.5, 1, 3, 4, 7 meters		BN25G-xx
Category 5e (4-Twisted Pairs, Screened/ ScTP) straight-through cable with RJ45-to-RJ45 connectors for system to switch, repeater, or hub connectivity. xx = available lengths: (0E, 01, 03, 04, 07) for 0.5, 1, 3, 4, 7 meters		BN26M-xx
Category 5e (4-Unshielded Twisted Pairs / UTP) Xover cable with RJ45-to-RJ45 connectors for system to switch, repeater, or hub connectivity. xx = available lengths: (0E, 01, 03, 04, 07) for 0.5, 1, 3, 4, 7 meters		BN24Q-xx
Category 5e (4-Twisted Pairs, Screened / ScTP) Xover cable with RJ45-to-RJ45 connectors for system to switch, repeater, or hub connectivity. xx = available lengths: (0E, 01, 03, 04, 07) for 0.5, 1, 3, 4, 7 meters		BN28Q-xx

Step 12 - Graphics Adapters - Optional

- Reference individual product information for operating system support.
- Systems include dual embedded 10/100 BaseT Ethernet ports (BN25G-xx cable must be ordered separately)
- Additional Ethernet ports can be added using available PCI slots

	Maximum # Supported		
	Tru64 UNIX	OpenVMS	
ATI RADEON 7500 64-MB PCI 2D/3D Graphics Accelerator plus ATI RADEON NEBS kit NOTE: Slot 0 must be used for this configuration.	1	1	3X-PBXGG-TA

Step 13 - Software - Required selection of media and documentation for first system on site

Tru64 UNIX

- AlphaServer TS15 Tru64 UNIX systems include Base license, Unlimited User license, Server Extension license, Internet Express and Hewlett-Packard Secure Web Server

When using Tru64 UNIX V5.0A or later	Tru64 UNIX media and online documentation on CD-ROM	QA-6ADAA-H8
	Tru64 UNIX full hard copy documentation	QA-6ADAA-GZ
	TruCluster Plus Software Package with licenses for TruCluster Server, Logical Storage Manager, and AdvFS Utilities	QP-6R9AC-AA
	TruCluster Server License	QL-6BRAC-AA
	AdvFS Utilities License	QL-0EGAE-AA
	Logical Storage Manager License	QL-2GVAE-AA
	Advanced Server for Tru64 UNIX, 25 client concurrent use license	QL-5U29M-3D
	Advanced Server for Tru64 UNIX, 50 client concurrent use license	QL-5U29M-3E
	Advanced Server for Tru64 UNIX, 100 client concurrent use license	QL-5U29M-3F
	Advanced Server for Tru64 UNIX, 250 client concurrent use license	QL-5U29M-3G
	Advanced Server for Tru64 UNIX, 500 client concurrent use license	QL-5U29M-3H
	Layered products media and documentation for Tru64 UNIX on CD-ROM	QA-054AA-H8
	DECnet/OSI end-system license for Tru64 UNIX	QL-MTJAE-AA
	DECnet/OSI extended function license for Tru64 UNIX	QL-MTKAE-AA

OpenVMS

- AlphaServer TS15 OpenVMS systems include Base license with System Manager license and Hewlett-Packard Enterprise Integration Server License Package for OpenVMS Revision V3.0A.
- AlphaStation TS15 OpenVMS systems include Base license, Concurrent Use 1-user license, and NAS 150 Client license.
- Hewlett-Packard Enterprise Integration Package includes licenses for TCP/IP Services for OpenVMS, DECwindows Motif for OpenVMS Alpha, DECprint Supervisor for OpenVMS Alpha Plus, DECprint Supervisor for OpenVMS Open, DECnet-Plus for OpenVMS Alpha End System, Archive/Backup System for OpenVMS Management Tools, Archive/Backup Agent for Windows NT, OpenVMS Disk Services for Windows NT, Office Server for OpenVMS, PATHWORKS 32, PATHWORKS V6 for OpenVMS - Advanced Server, and DIGITAL Office Server Client Access License

OpenVMS V7.3-1 media and online documentation on CD-ROM	QA-MT1AR-H8
OpenVMS V7.3-1 media and online documentation on CD-ROM	QA-MT1AT-H8
OpenVMS media and online documentation on CD-ROM	QA-MT1AA-H8
OpenVMS hard copy documentation	QA-001AA-GZ
Layered products media and documentation for OpenVMS on CD-ROM	QA-03XAA-H8
Open3D for OpenVMS on CD-ROM, includes graphics drivers	QA-0ADAA-H8

- OpenVMS Concurrent Use licenses provide the right to interactively use the operating system by the specified number of concurrent users on a designated OpenVMS system. OpenVMS Concurrent Use licenses can be moved from one system to another at user discretion and can be shared in a mixed OpenVMS VAX and OpenVMS Alpha cluster.
- OpenVMS Traditional Unlimited Use license is system specific and can only be used on one single system at a time. It cannot be shared between systems or in an OpenVMS VAX or OpenVMS Alpha Cluster.

Concurrent Use 1-user license	QL-MT3AA-3B
Concurrent Use 2-user license	QL-MT3AA-3C
Concurrent Use 4-user license	QL-MT3AA-3D
Concurrent Use 8-user license	QL-MT3AA-3E
Concurrent Use 16-user license	QL-MT3AA-3F
Concurrent Use 32-user license	QL-MT3AA-3G
Concurrent Use 64-user license	QL-MT3AA-3H
Concurrent Use 128-user license	QL-MT3AA-3J
Concurrent Use 256-user license	QL-MT3AA-3K
Traditional Unlimited User license	QL-MT2AE-AA
OpenVMS Cluster license for Alpha systems	QL-MUZAC-AA
OpenVMS Cluster Client license for Alpha systems	QL-3MRAC-AA
OpenVMS Cluster Client-to-Full OpenVMS Cluster Migration license	QL-6J7AC-AA

Step 14 - Hardware and Software Support Services

Hardware and Software Support Services

- Select one of the optional HP Care Pack Service Packages described below that best supports the customer's operational requirements for system availability.

HP Care Pack Services

- HP Care Pack Services are available for AlphaServer systems running Tru64 UNIX or OpenVMS operating systems. HP Care Pack Services are designed for customers who require support beyond that provided by the hardware warranty with coverage for both Principal servers/stations and SSPs (Subsequent System Packages) - that meet a full range of customer support requirements.

Options

Program Features – Principal Server/Station

HP Support Plus
- HP Support Plus offers combined hardware and software services in one package, providing support during standard HP office hours.

HP Support Plus 24
- HP Support Plus 24 offers combined hardware and software services in one package to help enhance the availability and performance of your IT infrastructure 24x7

HP Proactive 24
- HP Proactive 24 (P24) is a combined hardware and software support solution designed to help you get more from your IT investment. P24 improves the effectiveness, performance, and availability of the technologies in your IT infrastructure.

HP Critical Service
- HP Critical Service (CS) is a comprehensive hardware and software support solution, designed for organizations running business critical applications. CS provides a combination of proactive and reactive services for mission critical environments with little or nor tolerance for downtime.

Program Features - Additional Services

SSPs (Subsequent System Packages)
- For HP Care Pack Support Plus and Support Plus 24
- HW Support at same level as corresponding package for Principal serveR
- License Subscription: HP O/S (where applicable)
- Telephone support through Principal server/station covered by full support package

Installation
- Pre-installation review
- Unpacking of equipment
- Assemble and test
- Basic product usage info
- No software installation added

Installation & Startup HP O/S
- Pre-installation review
- Unpacking of equipment
- Assemble and test
- Basic product usage info
- Install operating systems
- Product configuration
- Print and network access
- Orientation

HP Care Pack Services for AlphaServer TS15 Systems (sold via legacy Order Management System)				
Model/HP Care Pack Services	Principal Server/ 1 year	Principal Server/ 3 years	Subsequent Systems 1 year	Subsequent Systems 3 years
AlphaServer TS15				
HP Support Plus	FP-A01CA-12	FP-A01CA-36	FP-A21CA-12	FP-A21CA-36
HP Support Plus 24	FP-A02CA -12	FP-A02CA-36	FP-A22CA-12	FP-A22CA-36
Installation	FP-AINST-CA	FP-AINST-CA	FP-AINST-CA	FP-AINST-CA
Installation & Startup	FP-ASTAR-CA	FP-ASTAR-CA	FP-ASTAR-CA	FP-ASTAR-CA
HP Care Pack Services for AlphaServer TS15 Systems (sold via Fusion Order Management System)				
	1-year Package ID#	Option ID#	3-year Package ID#	Option ID#
HP Support Plus	HA109A1	6HP	HA109A3	6HP
HP Support Plus 24	HA110A1	6HP	HA110A3	6HP
HP Proactive 24	HA111A1	6HP	HA111A3	6HP
HP Critical Service	HA112A1	6HP	HA112A3	6HP

NOTES:

- AlphaServer TS15 systems include one-year hardware warranty with 5x9, on-site Next Business Day response.
- HP Care Pack Services include support for new HP branded hardware options internal to the AlphaServer enclosure plus a monitor (17-inch or less excluding flat panel models).
- External storage devices/cabinets carry their own level of warranty and should be quoted separately for uplifted warranty services.
- In addition to the HP Care Pack Services shown above, other service packages are available for separate hardware and software support. For more information on Hardware and Software Upfront Services and other HP service options available for AlphaServers and AlphaStations, consult your Sales Account Manager, HP Services Principal, or visit http://www.hp.com/hps/

Technical Specifications

Physical Characteristics	**Dimensions** (H x W x D)	5.1 x 17.6 x 19 in (13 x 45 x 48 cm)	
	Weight (maximum)	41 lb (16.3 kg)	

System Environmental	**Temperature**	Operating (Rackmount)	41° to 104° F (5° to 40° C)
		Short Term	-23° to 122° F (5° to 50° C)
		NOTE: Maximum operating temperature at sea level. Reduce by 1.8° F (1° C) for each 2,000 ft (660 m) above sea level.	
		Non-operating	-40° to 151° F (-40° to 66° C)
	Humidity	Operating	5% to 85%
		Non-operating	5% to 90%
	Heat Dissipation	Single unit = 220 Watts = 752 BTU/Hr	
		Rack of 10 systems = 2200 Watts = 7513 BTU/Hr	
Equipment dimensions measured in normal mounting configuration	**Height**	5.25 inches (13.36 cm)	
	Width	17.5 inches (44.45 cm)	
	Depth	17.24 inches (43.79 cm)	
Equipment footprint	8.5 square ft (0.79 square meters)		
Equipment total weight	41 lbs (18.6 kg)		
Equipment floor loading (GR 63: O2 18, R2 19)	4.82 lbs/square ft		
Equipment heat release	370 Watts		
Equipment heat release (GR 63: R4 11, O4 12)	**Frame:**	43.5W/square ft	
	Shelf:	99.4 W/square ft/ft	
Minimum aisle clearance required for fully open door 'clear swing' - front (cabinet)	30 inches (76.2 cm)		
Minimum aisle clearance required for fully open door 'clear swing' - rear (cabinet)	24 inches (60.96 cm)		
Main logic board containing Alpha CPU, EV68-CB, 1 GHz Memory	**Main memory**	1 GB	
	3 hard disk drives		
	1 DVD/CD-RW drive		
	1 PCI graphics card		
Running system exerciser during power measurement	**Measured Input Voltage**	48 VDC	
	Measured Input Current	4.7 amps	
	Measured Input Power	220 Watts	
Altitude (unpressurized)	**Operating**	10,000 ft (3,048 m)	
	Non-operating	40,000 ft (12,192 m)	
	NOTE: Higher altitudes are possible if maximum operating temperature is reduced.		

Technical Specifications

Electrical	**Nominal Voltage**	-48VDC
	Operating Voltage Range	-36 to -72 VDC
	Power Source Phase	Dual Power Input
	Maximum Inrush Current	According to ETS 300-132-2.
	Power Supply (single cordset)	7.5 amps

Acoustics

(Declared values per ISO 9296 and ISO 7779)

AlphaServer TS15 with one to four HDD	L_{WAd}B	L_{pAm}, dBA (Operator position)	L_{pAm}, dBA (Bystander Position per ISO 7779)
Idle	6.2	45	47
Operating	6.2	45	47
Idle/Operating - high temperature per ETSI	6.3	46	48

Regulatory	**Agency Approvals**	Bellcore NEBS GR-63-CORE Bellcore NEBS GR-1274 Bellcore SR-3580 Bellcore GR 1089-CORE, EMC requirements ETS 300 019 series, ETSI environmental conditions and test ETS 300 119-2, ETSI requirements for racks and cabinets ETS 300 132-2, DC system voltage requirements ETS 300 253, Earthing system requirements UL: Listed to UL1950 (3rd edition) CUL Listed: CAN/CSA-C22.2 No. 950-M95 TUV: EN 60950/A11: 1997 GS marked FCC: Part 15 Class B CE: EN55022, EN50082 VCCI Class II ITE BMSI: CISPR22, CNS13438 C-Tick: CISPR22, AS/NZS 3548
	Reviewed to	AS/NZ 3260:1993 Australian/New Zealand Standard EN 60950/A11: 1997 European Norm IEC950 (2nd edition, 4th amend)

© Copyright 2004 Hewlett-Packard Development Company, L.P.
The information contained herein is subject to change without notice.
UNIX is a registered trademark or trademark of The Open Group in the U.S. and/or other countries. The only warranties for HP products and services are set forth in the express warranty statements accompanying such products and services. Nothing herein should be construed as constituting an additional warranty. HP shall not be liable for technical or editorial errors or omissions contained.