*hp AlphaServer ES*47/*ES*80/*GS*1280

Installation Information

Revision 1.0

This help file covers the installation of both the cabinet and pedestal forms of the hp *AlphaServer ES*47, the *ES*80 and all models of the hp *AlphaServer GS*1280.

Installations:

ES47 Tower Installation

The ES47 tower comes in a single 2P drawer and embedded I/O.

1. Unpack and de-skid the system.
2. Place the tower to the desired location.
3. Install the floor stand. Pull the floor stands apart, place the tower on them, and press the floor stand against the sides of the tower.
4. Connect a LAN (PC) console, or Connect a Graphics Terminal console, or Connect a Serial Line console, or AMS Console Connection.
5. Verify the installation.

Unpacking the ES47 Tower

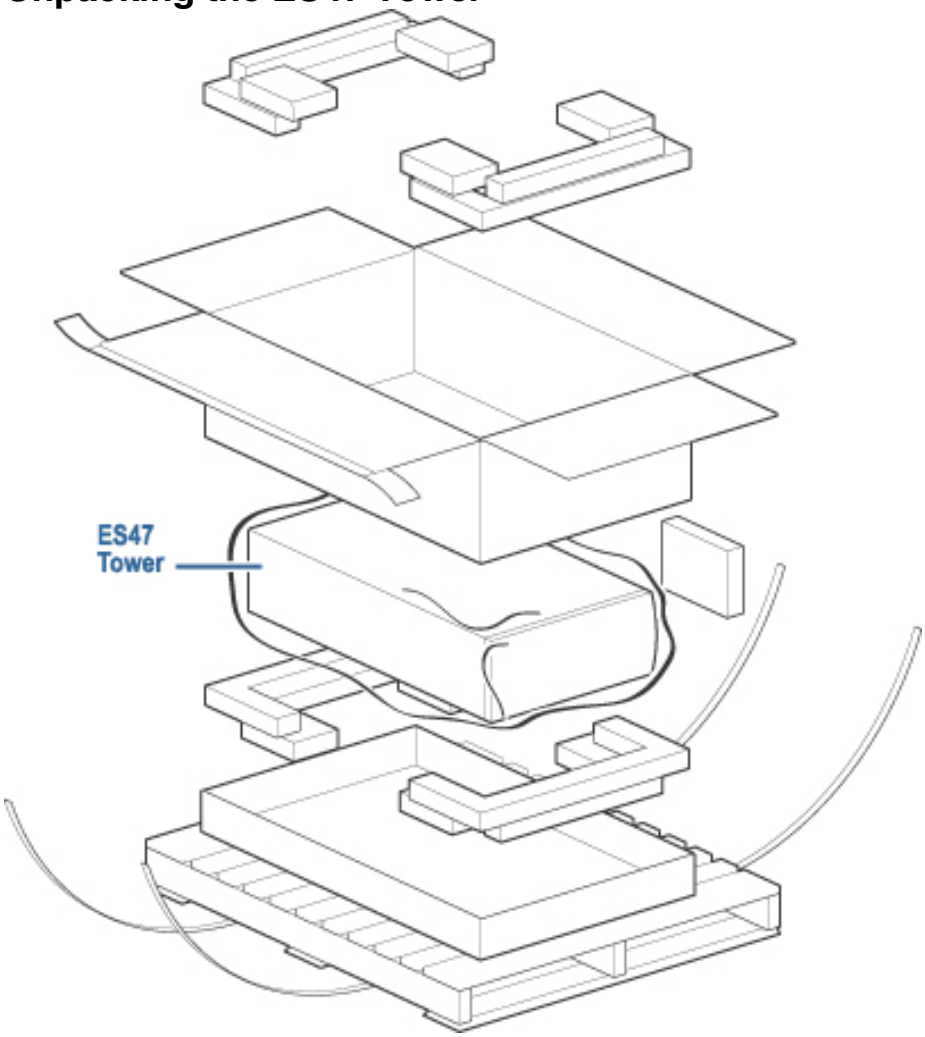

The ES47 tower weighs approximately 120 pounds. Take appropriate precautions when unpacking and moving the system.

To unpack the ES47:

1. Cut the two packing straps holding the box to the pallet.
2. Open the top of the box.
3. Take out the two styrofoam packs at the top.
4. Lift the cardboard carton off the styrofoam that is the bottom of the box.

Remove the tower and its stand.

Install the ES 47 Tower floor stand

Install the floor stand. Pull the floor stands apart, place the tower on them, and press the floor stand against the sides of the tower.

ES47 Tower LAN (PC) Console Connection

Making the hardware connection:

1. Open the front door.
2. Unscrew the captive screw that holds the top cover to the frame.
3. Pull the top cover back and off the frame.
4. Unscrew the captive screw that holds the right side panel to the frame.
5. Lift the right side panel off the frame
6. Using a BN24Q-xx cable, (a crossover network cable) connect a PC/laptop to the network receptacle now available on the bottom shelf.
7. Lay the cable on the shelf so that it exits the back of the tower.
8. Replace the side panel and cover.

Setting up the PC/laptop:

The procedure listed here is Microsoft Windows 200 specific.

1. To set up your PC/laptop on the internal LAN, it needs a specific LAN address; use 1.253.0.254.
   Do that by following this procedure:
   Click on **start**, **settings**, **network and dial-up connections**.
   Select **local area connections**.
   Click on **properties**.
   Select **Internet protocol (TCP/IP)**
   Change from **Obtain an IP address automatically** to **Use for following IP address**.
   Enter the following in the Internet Properties (TCP/IP) Properties Box:

Field	**Enter**
IP address field	10.253.0.254 - this is a special fixed IP address on the internal LAN that points to the PMU.
Subnet mask field	255.0.0.0
Default gateway	leave blank

Back out of all the dialog boxes by clicking on **close**.
Set up a telenet address of 10.253.0.1. This is the PMU's address.
Start a telnet session to address 10.253.0.1.
Apply power to the system by putting the circuit breakers on the PDU in the on position. The MBM> prompt should appear on the PC/laptop.

Refer to the AMS 1.1.0 CD for instructions on installing and using the AlphaServer Management Utility (AMU) from a PC running Windows.

ES47 Tower Graphics Terminal Console Connection

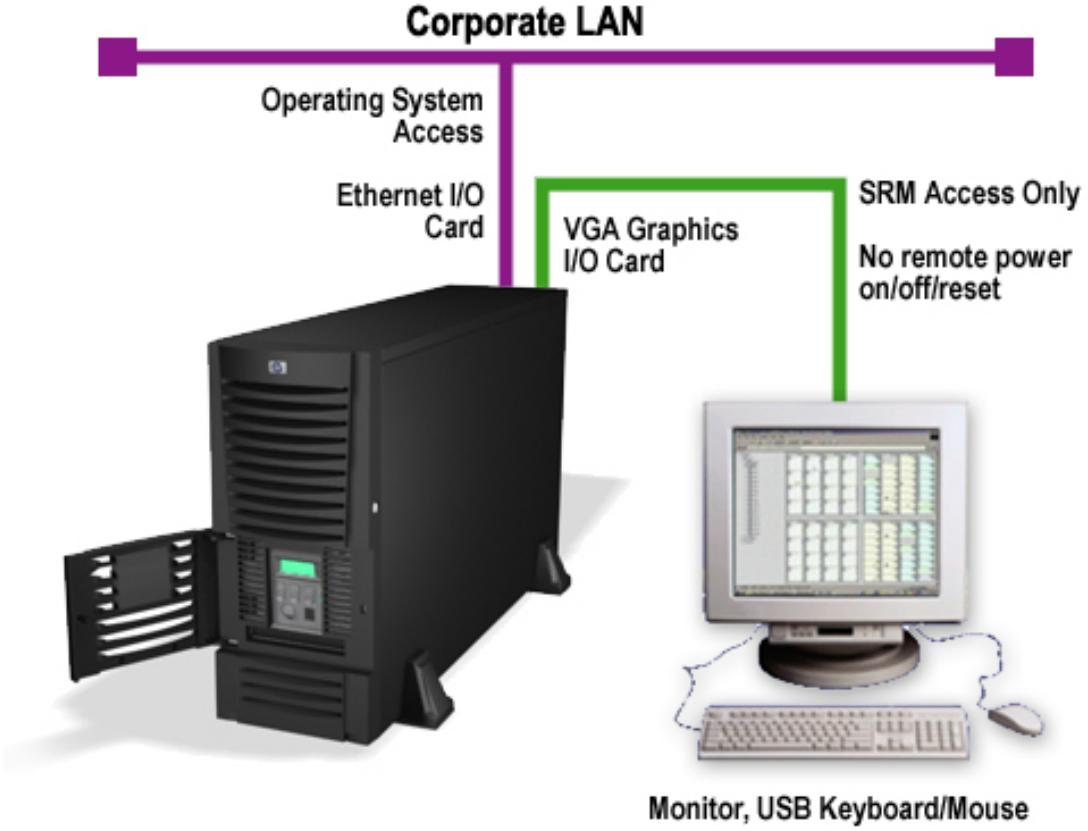

With this connection you use the buttons on the OCP to power on and off the system. The graphics terminal has access to the SRM console and the operating system. It does not have access to the MBM.

Making the hardware connection:

1. Connect your graphic terminal to the graphic card in the ES47 tower's AGP port .

Setting up:

1. Use the OCP pushbuttons to power up the system.
2. Hit return on the graphics terminal.
3. Type the **set console graphics** command.
4. You should see the P00>>> prompt.

ES47 Tower Serial Line Console Connection

Making the hardware connection:

1. Open the front door.
2. Unscrew the captive screw that holds the top cover to the frame.
3. Pull the top cover back and off the frame.
4. Unscrew the captive screw that holds the right side panel to the frame.
5. Lift the right side panel off the frame
6. Using a serial line cable, connect a PC/laptop to the serial line receptacle now available on the bottom shelf.
7. Lay the cable on the shelf so that it exits the back of the tower.
8. Replace the side panel and cover.

Setting up the PC/laptop:

Baud rate = 9600
Byte size = 8 bit
Parity = none

ES47 Tower AMS Console Connection

Making the hardware connection:

1. Open the front door.
2. Unscrew the captive screw that holds the top cover to the frame.
3. Pull the top cover back and off the frame.
4. Unscrew the captive screw that holds the right side panel to the frame.
5. Lift the right side panel off the frame.
6. Using a BN24Q-xx cable, (a crossover network cable) connect an ethernet card in an AlphaServer workstation running Tru64 UNIX to the MSB LAN connection in the Tower.
7. Lay the cable on the shelf so that it exits the back of the tower.
8. Replace the side panel and cover.

If the customer intends to use the AlphaServer Management Station to control multiple ES47 Towers or other ES and GS series systems, the following additional hardware must be setup.

1. The LAN side of NAT box connected to the ES47 tower. See connect and set-up a NAT box.
2. The WAN side of the NAT box connected to multi-server LAN HUB.
3. The AMS setup to point to the WAN side of the NAT box. See setup the AMS on the MS LAN.

Setting up the AMS:

Assuming a direct connection from the AMS to the ES47 Tower:

1. Put the AMS on the corporate LAN. See setting up AMS to the corporate LAN.
2. Point the AMS to the MBM internal LAN connection. To do this follow the instructions for setting up the AMS on the MS LAN **AND** make the following change to that procedure. In step 6, when configuring Tu1 change the IP address field from 90.0.0.2 to 10.253.0.254. Leave the subnet mask 255.255.0.0
3. Install the AMS software using its installation and user documentation. Refer to the AMS 1.1.0 CD for instructions on installing and using the AlphaServer Management Station (AMS) from an AlphaServer workstation running Tru64 UNIX.

ES47 Cabinet

The ES47 comes in a single cabinet with one or two 2P drawers.

1. Unpack and de-skid the system.
2. Roll the cabinet to the desired location.
3. Level the system using the four leveling feet at the bottom four corners of the cabinet. Lower the leveling feet until the castor in each corner are free to rotate and the feet, not the castors, support the weight of the cabinet. At the rear of each cabinet you will find an extension bar with two non-load-bearing leveling feet - they should be lowered until they make contact with the floor.
4. All cable connections should be made in a single cabinet system. Check to make sure that cables are secure.
5. There are two shipping brackets at the front that secure the 2P drawers to the cabinet's side rails. On each side, remove the screw that secures the drawer to the bracket.
6. There are two orange shipping brackets at the back that secure the I/O drawers to the cabinet's side rails. On each side, remove the brackets and screws; save them with the system for use later should the system be moved.
7. Choose the console connection the customer has selected from the following possible connections.

ES47 Cabinet with 4 Separate Systems Using a PC
ES47 Cabinet with 4 Separate Systems Using a VGA
ES47 Cabinet with 4 Separate Systems Using an AMS
ES47 Cabinet with 4 Separate Systems Using the serial line
ES47 Cabinet with single M4 System Using a PC
ES47 Cabinet with single M4 System Using an AMS

8. Verify the installation.

ES47 Cabinet with 4 Separate Systems Using a PC

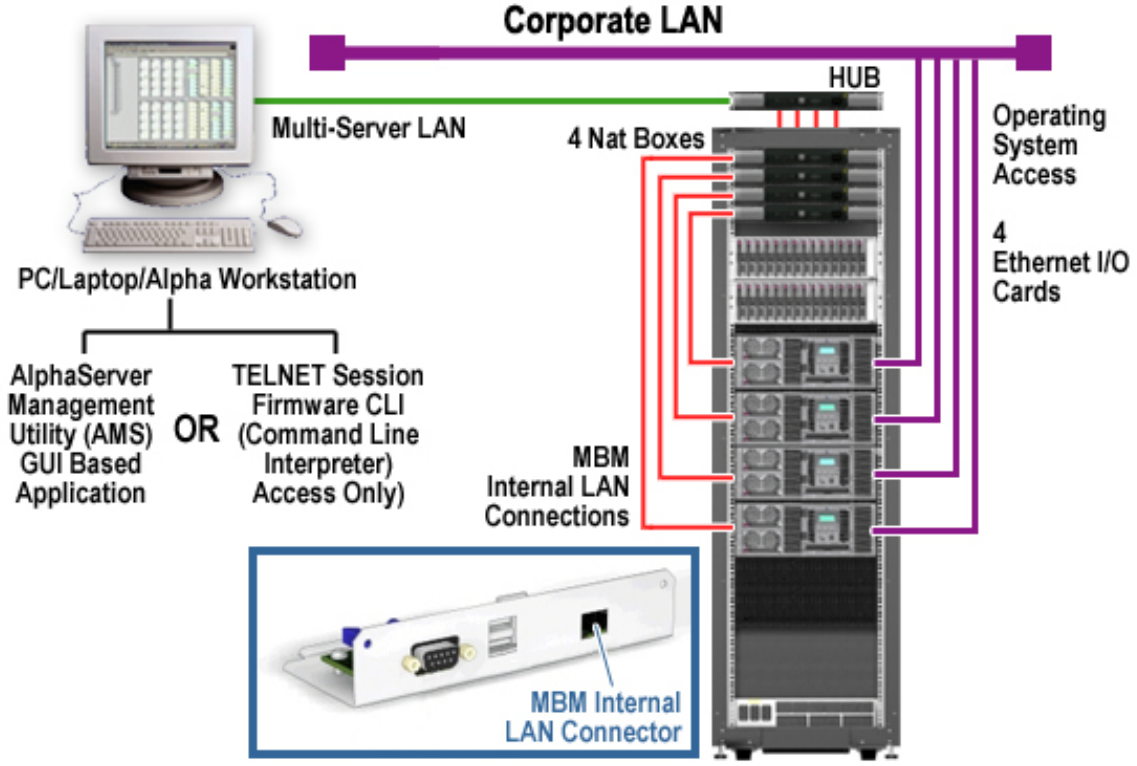

If the customer has decided to use a single or several PCs to control an ES47 cabinet that has 4 separate 2P systems, each system must have its own NAT box connecting to the MBM in each drawer. A single HUB is connected to the WAN side of each NAT box and a PC running AMU or telnet sessions act as the console.

Making the hardware connection:

In this case, each 2P drawer has its own NAT box. You can have 4 separate PCs, each connected to the WAN side of each NAT box, or have 1 PC connected to a HUB similar to a multi-server LAN to which each NAT box is connected. This procedure assumes the latter configuration.

1. Set up the NAT box between the internal LAN and the multi-server like LAN. When doing this, make sure that each NAT box has its own unique address. Suggested are: 90.0.100.1 for the first; 90.0.100.3 for the second; 90.0.100.5 for the third; and 90.0.100.7 for the fourth.
2. Use a BX25G-xx cable to connect the NAT box's **WAN connection** to the multi-server like LAN HUB.
3. Connect an ethernet card in the PC to the multi-server like LAN HUB again using a BX25G-xx cable. You may as well give the PC an address of 90.0.0.102 as you would an AMS.
4. Start telnet sessions on your PC to address <nat box address>:23 (23 is the PMUs port address). By setting up 4 sessions each pointing to a different NAT box you'll have control of each 2P system
5. The MBM> prompt should appear on your PC

Refer to the AMS 1.1.0 CD for instructions on installing and using the AlphaServer Management Utility (AMU) from a PC running windows.

ES47 Cabinet with 4 Separate Systems Using a Graphic Terminal

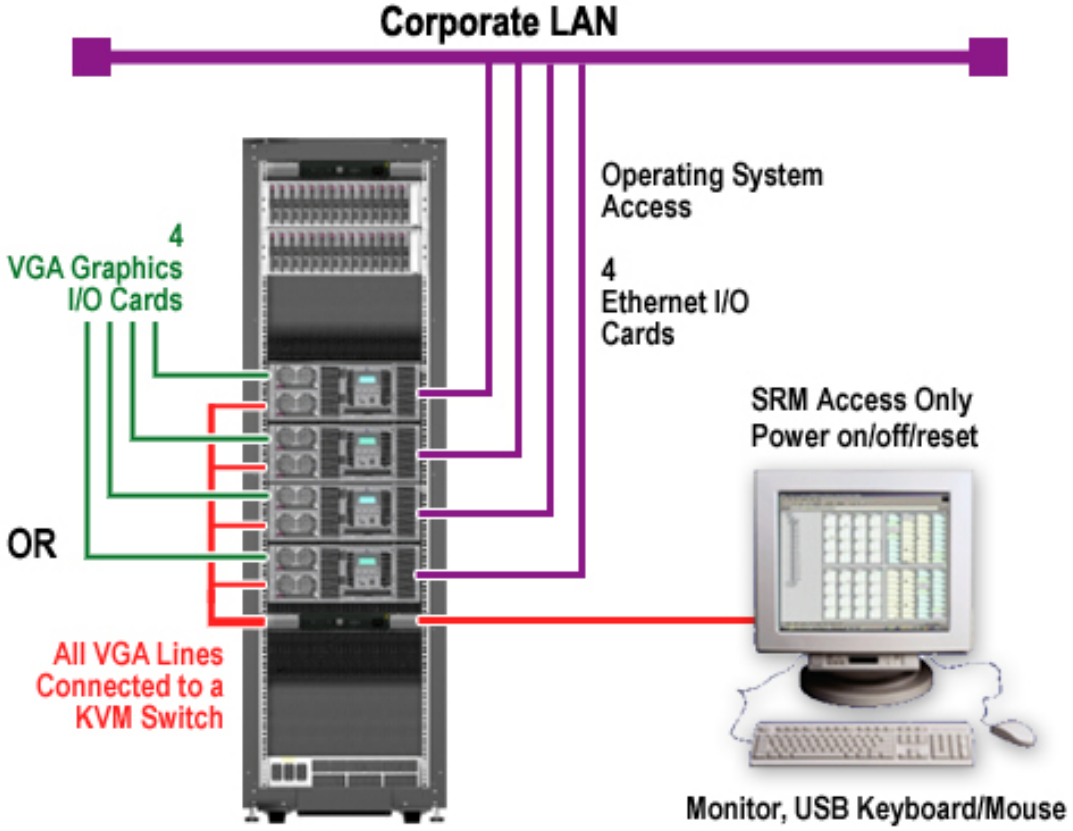

If the customer has decided to use a single or several VGAs to control an ES47 cabinet that has 4 separate 2P systems, each system (drawer) must have its own graphics card connecting to a VGA or to a KVM switch . With this type of connection, the VGA only has SRM console access and each drawer must be powered up by using the OCP pushbuttons.

Since the SRM console environment variable is set to serial in manufacturing, after power-up, issue the **set console graphic** command.

Making the hardware connection:

In this case, each 2P drawer has its own graphics card in its AGP port. You can have 4 separate VGAs, each connected a graphics card or have one VGA connected to a KVM switch. This procedure assumes the latter configuration.

1. Connect each graphic card in the each 2P drawer to the KVM switch.
2. Connect your graphics terminal to the KVM switch.

Refer to the KVM documentation for configuration information.

Setting up:

1. Use the keyswitch or the OCP pushbuttons to power up the system.
2. Hit return on the graphics terminal.
3. Type the **set console graphics** command.
4. You should see the P00>>> prompt.

ES47 Cabinet with 4 Separate Systems Using an AMS

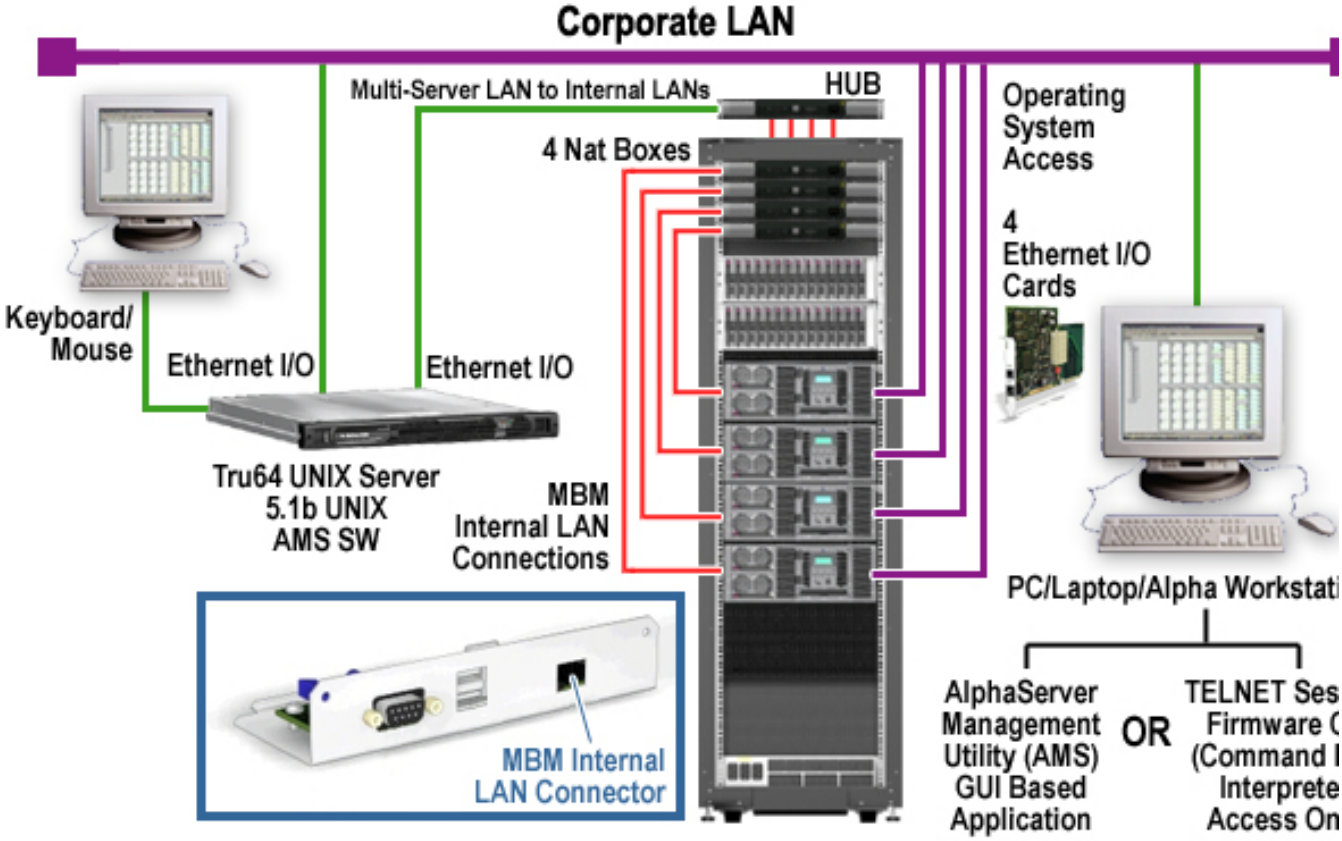

If the customer has decided to use a AMS to control an ES47 cabinet that has 4 separate 2P systems, each system must have its own NAT box connecting to the MBM in the 2P drawer. A separate HUB is connected to the WAN side of each NAT box and an ethernet card in the AlphaServer Management Station. The second ethernet card is connected to the corporate LAN. Any PC user on the corporate LAN running AMU or a telnet sessions and given appropriate privileges by the AMS can come through the AMS and act as the console for any of the four systems.

Making the hardware connection:

In this case, each 2P drawer has its own NAT box.

1. Set up the NAT box between the internal LAN and the multi-server LAN. When doing this, make sure that each NAT box has its own unique address. Suggested are: 90.0.100.1 for the first; 90.0.100.3 for the second; 90.0.100.5 for the third; and 90.0.100.7 for the fourth.
2. Use a BX25G-xx cable to connect each NAT box's **WAN connection** to the multi-server LAN HUB.
3. Set up the AMS on the multi-server LAN.
4. Set up the AMS on the corporate LAN.
5. Install the AMS software using its installation and user documentation.

Refer to the AMS 1.1.0 CD for instructions on installing and using the AlphaServer Management Station (AMS) from an AlphaServer workstation running Tru64 UNIX.

ES47 Cabinet with 4 Separate Systems Using Serial Lines

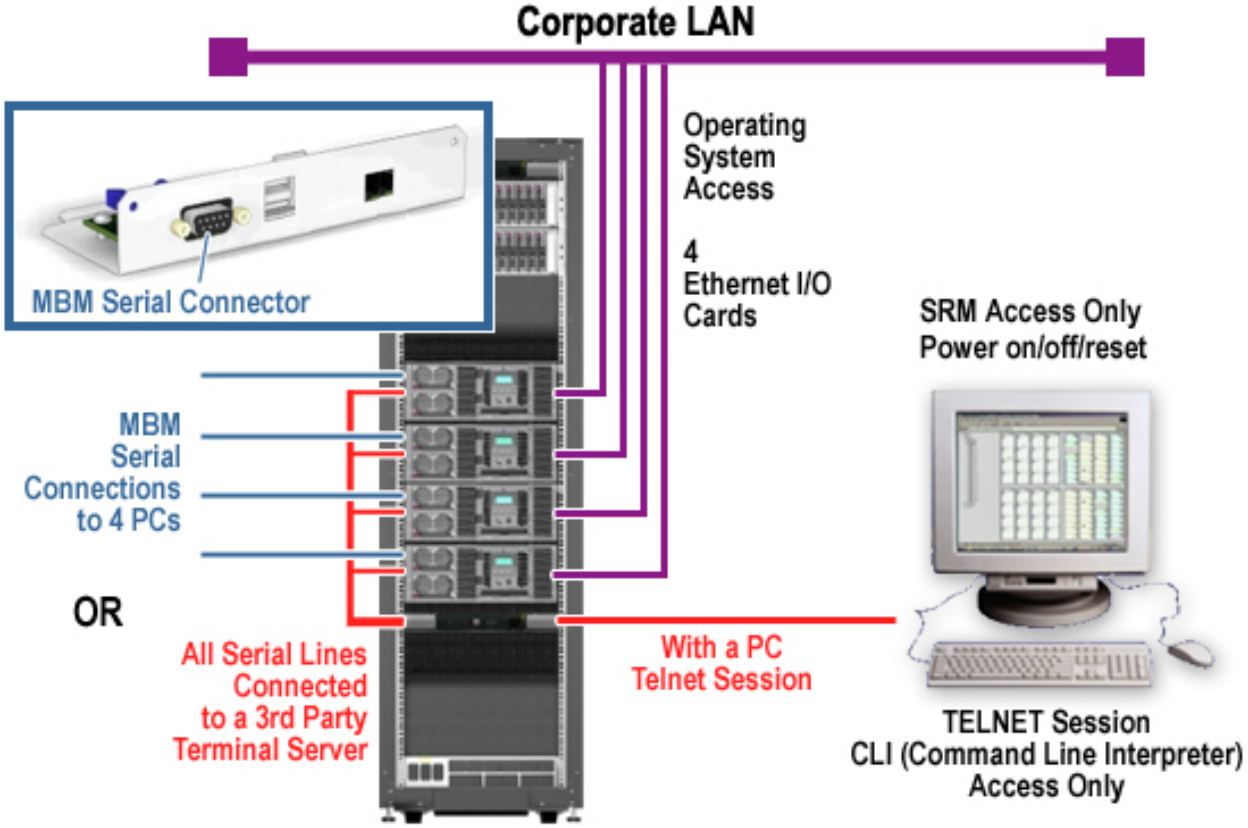

If the customer has decided to use the serial lines to control an ES47 cabinet that has 4 separate 2P systems, each system (drawer) must have its own PC connected to the MBM serial port or each serial port connected to a terminal server connected to a PC running telnet sessions. With this type of connection, the PC(s) has direct access to the MBM and can power on/off/reset the system using MBM> commands.

Making the hardware connection:

In this case, the serial port on the top of the each 2P drawer is connected to the serial port on a PC or laptop or is connected to a terminal server. This procedure assumes the latter configuration.

1. Connect each the serial port in the each 2P drawer to a terminal server.
2. Connect the serial port of your PC or laptop to the terminal server.

Refer to the terminal server documentation for configuration information.

Setting up the PC/laptop:

Baud rate = 9600
Byte size = 8 bit
Parity = none

ES47 Cabinet with a Single M4 System Using a PC

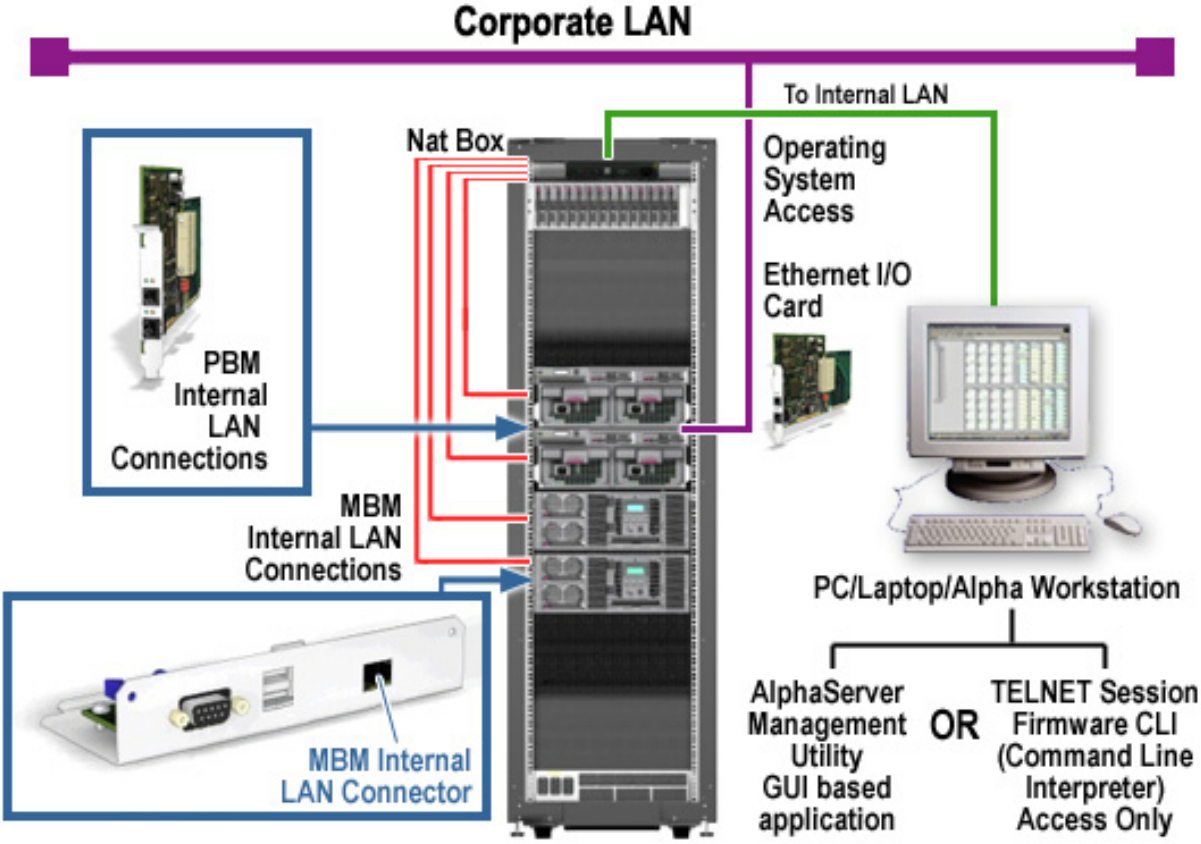

Making the hardware connection:

1. Set up the NAT box between the internal LAN and the multi-server LAN.
2. Use the second BX25G-xx cable to connect the NAT box's **WAN connection** to an ethernet card in the PC. If you followed the directions for setting up the NAT box, the WAN side of the NAT box has an address of 90.0.100.1
3. Start a telnet session on your PC to address <nat box address>:23 (23 is the PMUs port address)
4. The MBM> prompt should appear on your PC

Refer to the AMS 1.1.0 CD for instructions on installing and using the AlphaServer Management Utility (AMU) from a PC running windows.

ES47 Cabinet with a Single M4 System Using AMS

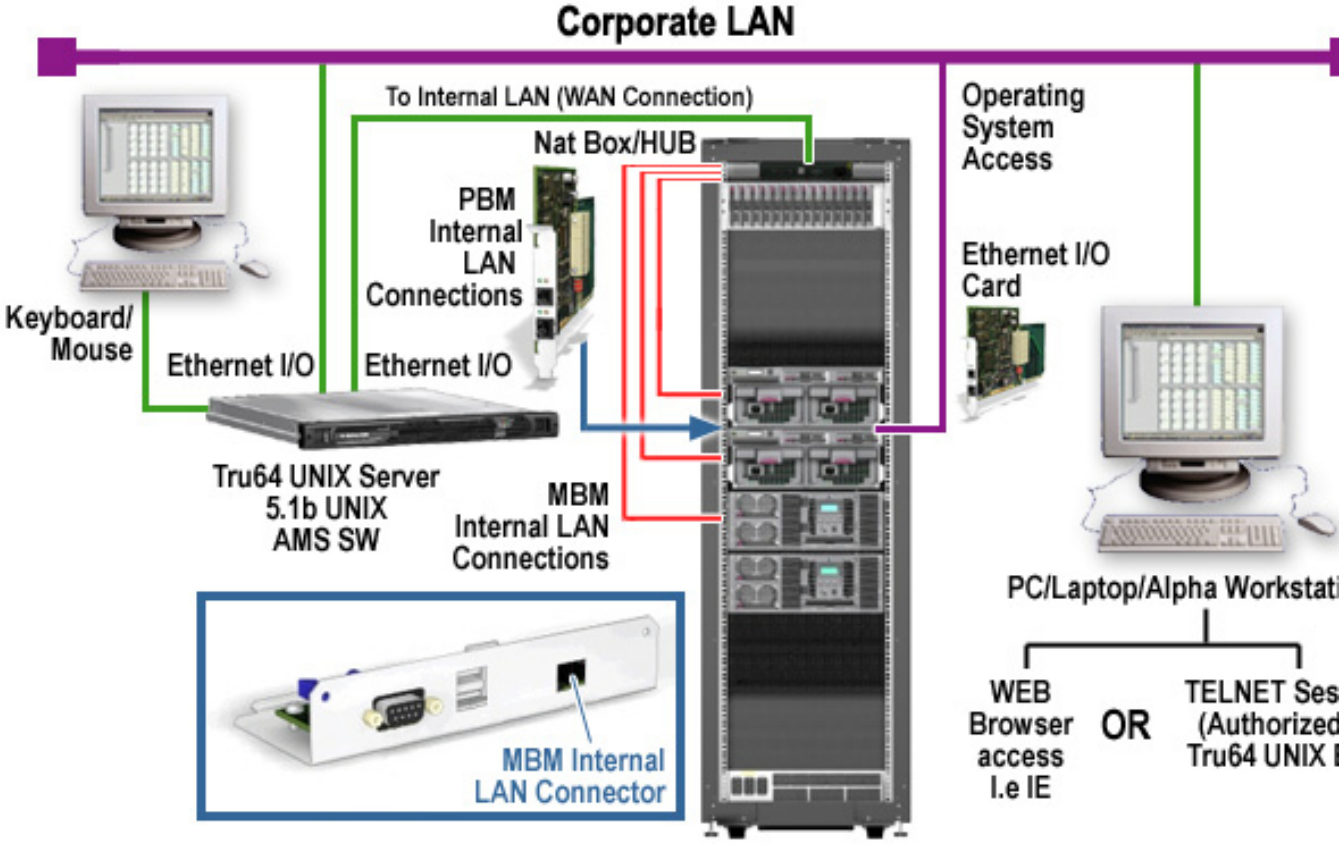

Making the hardware connection:

1. Set up the NAT box between the internal LAN and the multi-server LAN.
2. Use the second BX25G-xx cable to connect the NAT box's **WAN connection** to the HUB set up for the multi-server LAN.
3. Set up the AMS on the multi-server LAN.
4. Set up the AMS on the corporate LAN.
5. Install the AMS software using its installation and user documentation.

Refer to the AMS 1.1.0 CD for instructions on installing and using the AlphaServer Management Station (AMS) from an AlphaServer workstation running Tru64 UNIX.

ES80 Installation

The ES80 comes in a single cabinet with three or four 2P drawers.

1. Unpack and de-skid the system.
2. Roll the cabinet to the desired location.
3. Level the system using the four leveling feet at the bottom four corners of the cabinet. Lower the leveling feet until the castor in each corner are free to rotate and the feet, not the castors, support the weight of the cabinet. At the rear of each cabinet you will find an extension bar with two non-load-bearing leveling feet - they should be lowered until they make contact with the floor.
4. All cable connections should be made in a single cabinet system. Check to make sure that cables are secure.
5. There are two shipping brackets at the front that secure the 2P drawers to the cabinet's side rails. On each side, remove the screw that secures the drawer to the bracket.
6. There are two orange shipping brackets at the back that secure the I/O drawers to the cabinet's side rails. On each side, remove the brackets and screws; save them with the system for use later should the system be moved.
7. Under normal circumstances an expander cabinet does not come with this system, however, should one arrive, place the cabinet to the right of the system cabinet and follow the procedure for installing an expander cabinet.
8. Connect and set up the NAT box.
9. Connect the console.
10. Verify the installation.

GS1280 - 8 Processor Model Installation

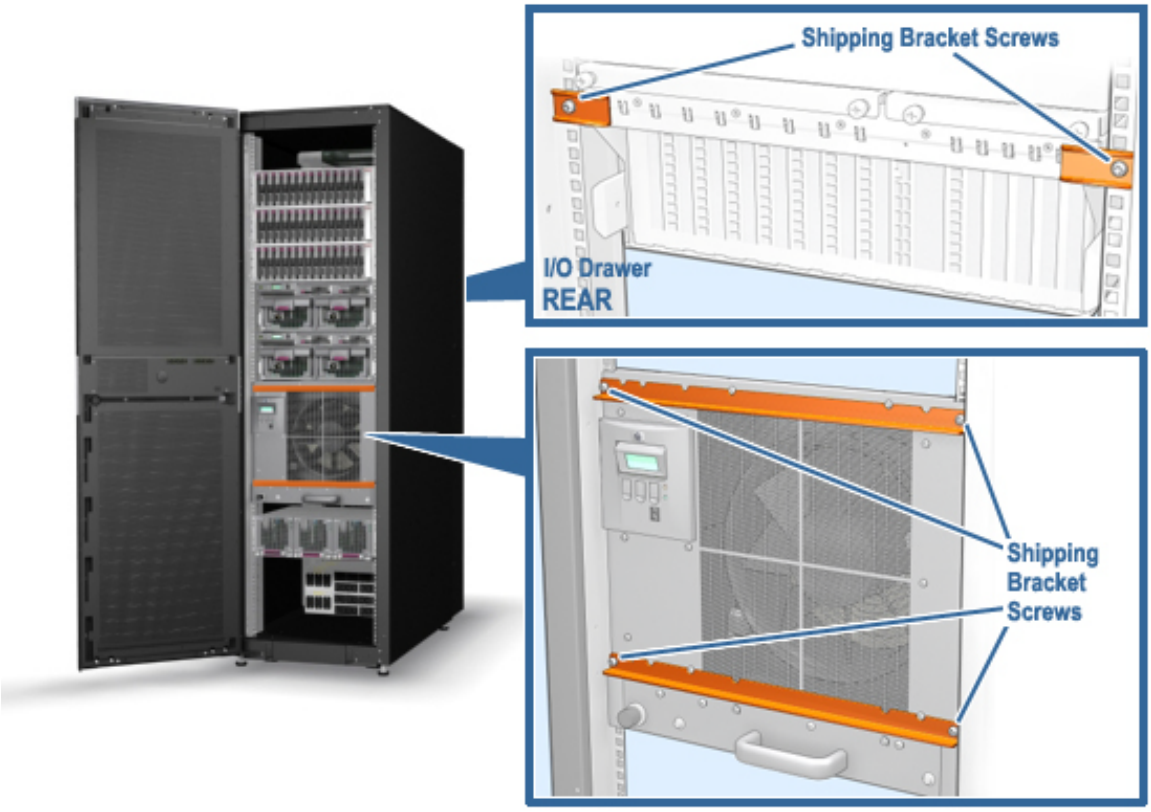

The 8 Processor model comes in two flavors: one with one with 8 processors in a single cabinet and one with 8 processors and one or two expander cabinets. In either case, power for the processors is in the cabinet with the processor drawer.

1. Unpack and de-skid the system cabinets.
2. Roll the cabinets to the place the customer wants them located and arrange them according to the cabinet placement rules for the given system.
3. If necessary, follow the procedure for installing an expander cabinet.
4. Level the system using the four leveling feet at the bottom four corners of the cabinet. Lower the leveling feet until the castor in each corner are free to rotate and the feet, not the castors, support the weight of the cabinet. At the rear of the cabinet you will find an extension bar with two non-load-bearing leveling feet - they should be lowered until they make contact with the floor.
5. Remove the orange shipping brackets and their screws; save them with the system for use later should the system be moved.
6. There are two orange shipping brackets at the back that secure the I/O drawers to the cabinet's side rails. On each side, remove the brackets and screws; save them with the system for use later should the system be moved.
7. All cable connections should be made in a single cabinet system. Check to make sure that cables are secure.
8. Connect to and set up the NAT box.
9. Connect the console.
10. Verify the installation.

8P Model Cabinet Placement

Expansion of the 8P system alternates from side to side. The system cabinet's ID is 0, the first expansion cabinet is placed to the right and has a cabinet ID of 1, the second expansion cabinet is placed to the left of the system cabinet and has a cabinet ID of 2. Any other expansion cabinets follow this right to left pattern with incrementing cabinet IDs.

GS1280 - 16 Processor Model Installation

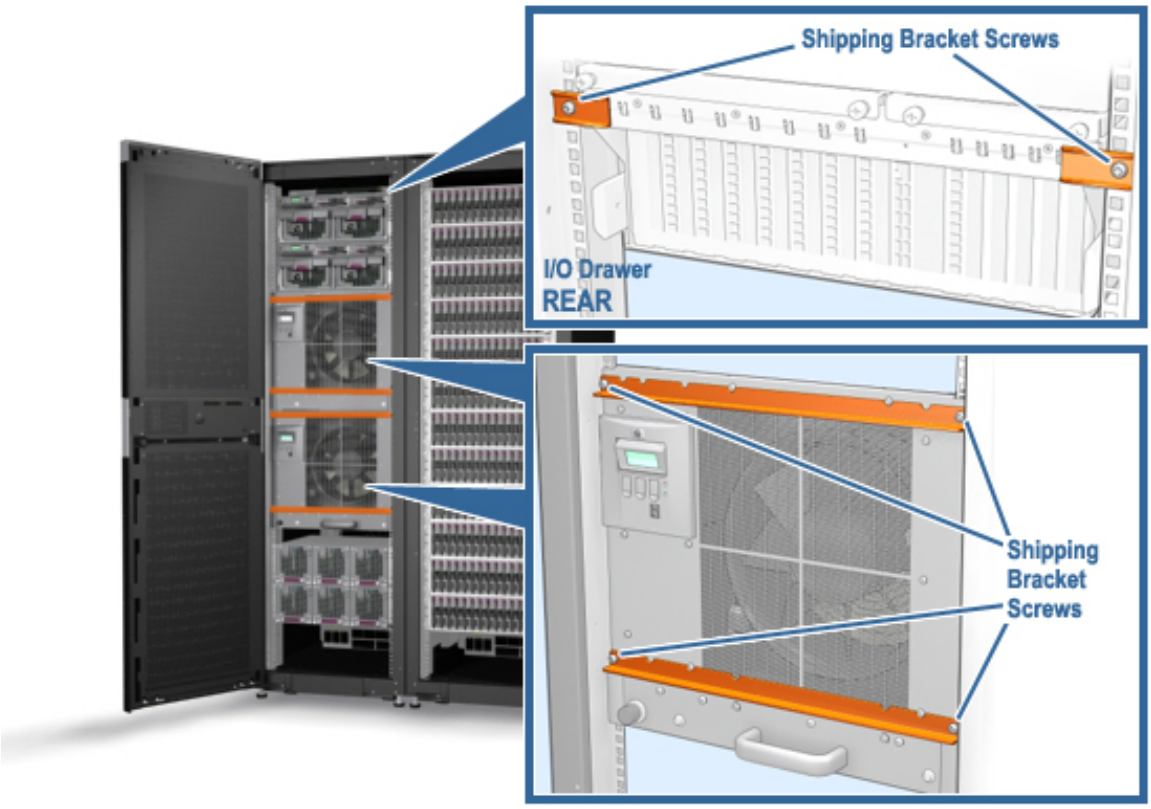

The 16 Processor model consists of a cabinet with two 8P drawers and may or may not have an expander cabinet. Power is in the cabinet with the 8p drawers

1. Unpack and de-skid the system.
2. Roll the cabinets to the desired location and arrange them according to the cabinet placement rules for the given system.
3. If applicable, follow the procedure for installing an expander cabinet.
4. Level the system using the four leveling feet at the bottom four corners of the cabinet. Lower the leveling feet until the castor in each corner are free to rotate and the feet, not the castors, support the weight of the cabinet. At the rear of each cabinet you will find an extension bar with two non-load-bearing leveling feet - they should be lowered until they make contact with the floor.
   (insert graphic of leveling feet)
5. Remove the orange shipping brackets and their screws; save them with the system for use later should the system be moved.
6. There are two orange shipping brackets at the back that secure the I/O drawers to the cabinet's side rails. On each side, remove the brackets and screws; save them with the system for use later should the system be moved.
7. All cable connections should be made in a single cabinet system. Check to make sure that cables are secure.
8. Connect to and set up the NAT box.
9. Connect the console.
10. Verify the installation.

16P Model Cabinet Placement

Expansion of the 16P system alternates from side to side. The system cabinet's ID is 0, the first expansion cabinet is placed to the right and has a cabinet ID of 1, the second expansion cabinet is placed to the left of the system cabinet and has a cabinet ID of 2. Any other expansion cabinets follow this right to left pattern with incrementing cabinet IDs.

Common Events

Unpacking and De-Skidding

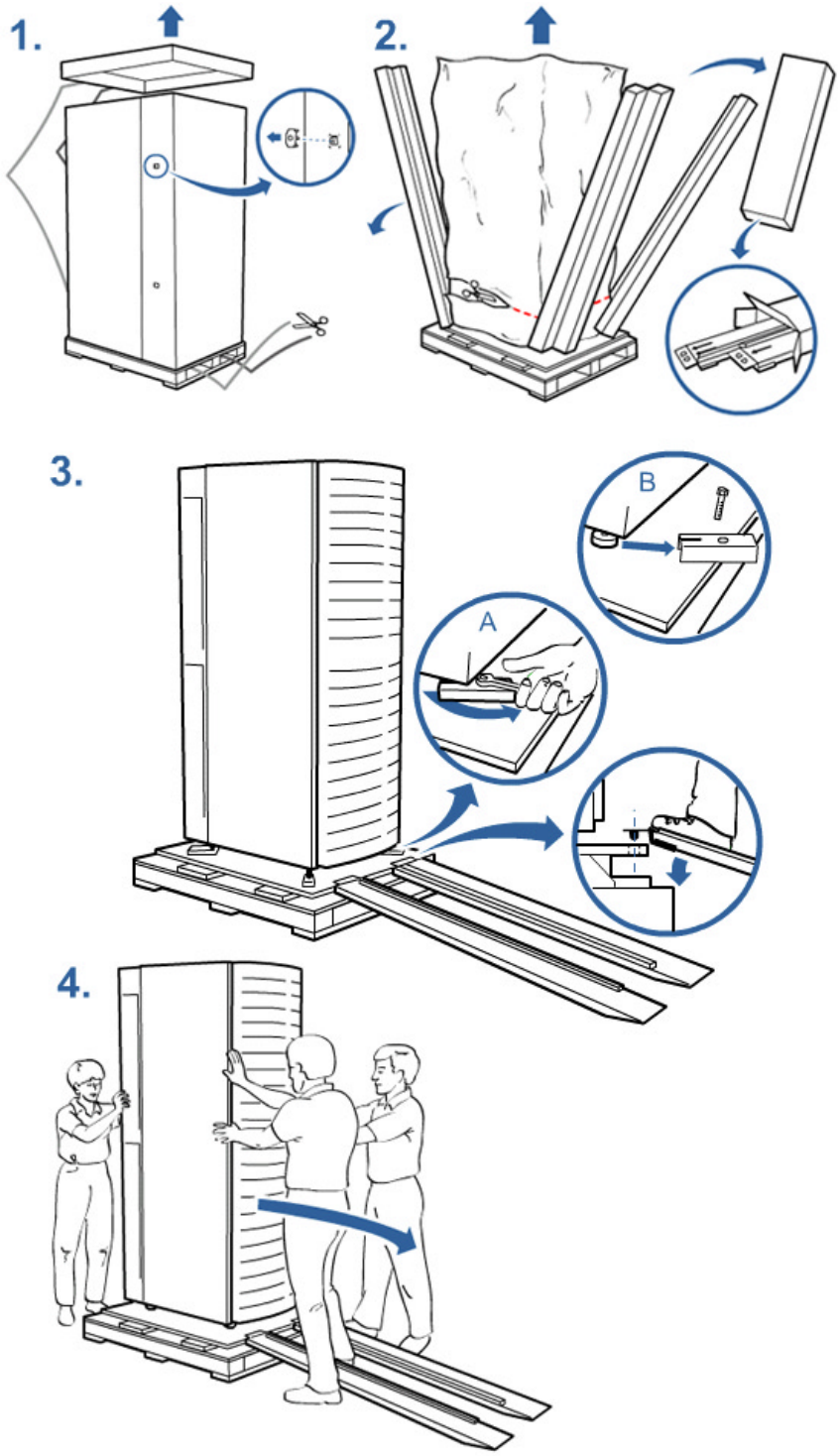

The larger of these systems are extremely heavy and require three people to de-skid them.

System cabinets are 2 meters tall and will not fit through doors that are 80 inches tall while on their skids. You may have to de-skid them before getting them into the computer room.

Be sure all stabilizer feet are raised before de-skidding.

Depending up where you are in the world, you may receive a system completely enveloped in heavy duty corrugated card board or "shrink wrapped". In either case, you'll have pictured instructions showing how to unpack and de-skid the system inside.

- Step 1 is pretty self explanatory: you cut the straps, remove the top, remove the screws hold the corrugated sides together and remove them. Obviously, if the system came "shrink wrapped", you remove the wrap.

- Step 2, is self explanatory.

- Add to Step 3 the need to **rise all stabilizer feet** to their maximum height before de-skidding. This is important. If the feet are not raised, they may contact the floor at the bottom of the ramp and bend. Also, be sure to place the ramps on the pallet such that the ramp rails are "inside" the cabinet wheels.

- Step 4 indicates at least three people are required to remove the system from the skid. These systems can weigh up to 1600 pounds - three people are needed to control the system down the ramp.

Installing an Expander Cabinet

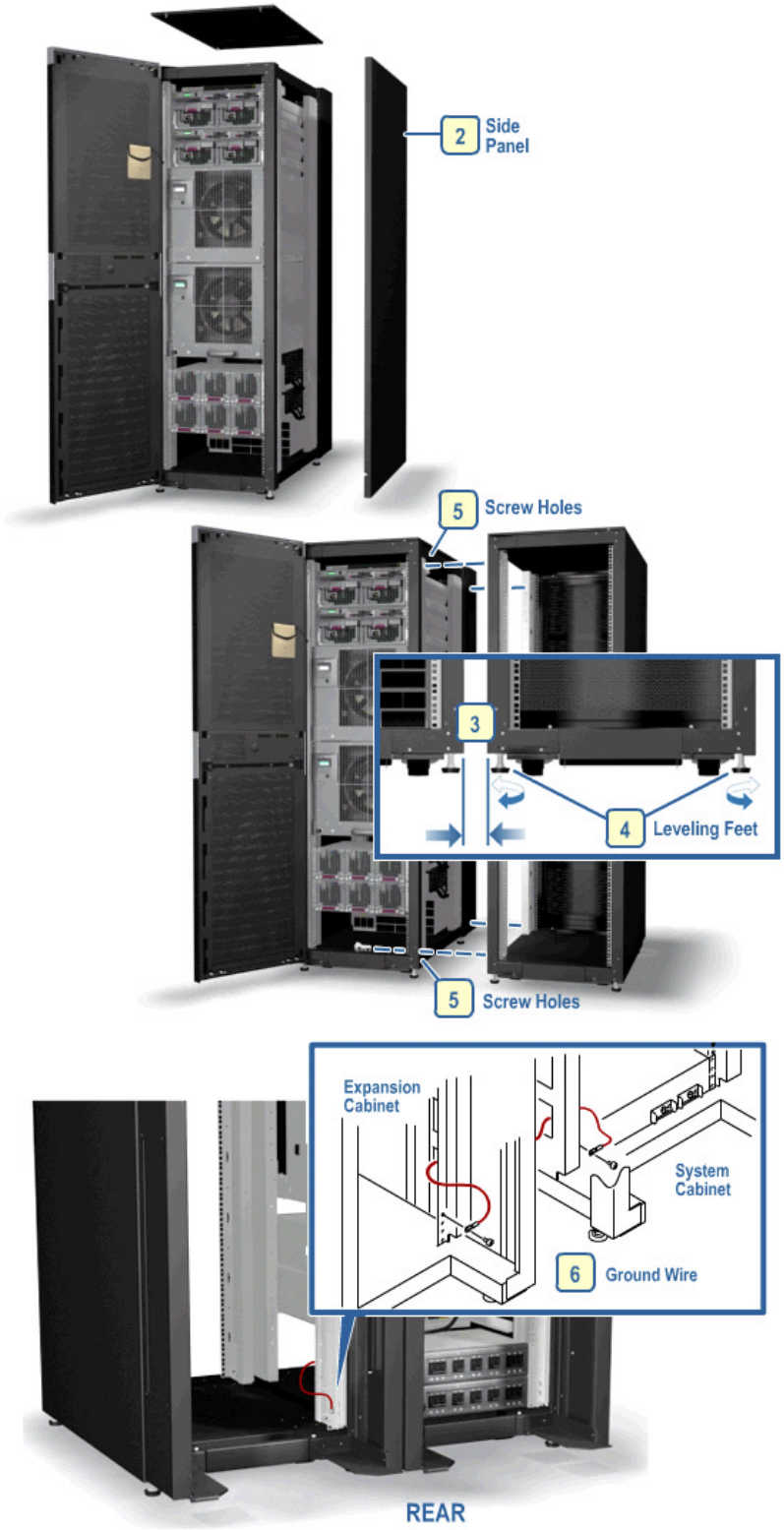

1. You should already have determined the location of the expander cabinet relative to other cabinets making up the system.
2. Remove the panel, either right or left of both the expander cabinet and its neighbor.
3. Roll the expander cabinet as close as possible to its neighboring cabinet and align the front and rear surfaces.
4. Align the cabinet heights by adjusting the leveling feet.
5. Use the four screws from the joining kit (PN 70-40120-02) to join the cabinets together. (graphic shows screw placement.)
6. Connect the ground wire to both cabinets. (graphic shows ground cable placement.)
7. Set the cabinet ID number on the front door OCP push wheel according to the rules for setting cabinet IDs.
8. If the cabinet has I/O drawers, set the push wheel ID number on the drawer OCP according to the rules for setting drawer IDs.
9. Cabling depends upon the contents of the expander cabinet and the contents of the system cabinet. I/O drawers must be connected using an IP cable to an I/O CPU connector. Storage shelves must be connected to storage shelf controllers in I/O drawers.

Removing Side Panels

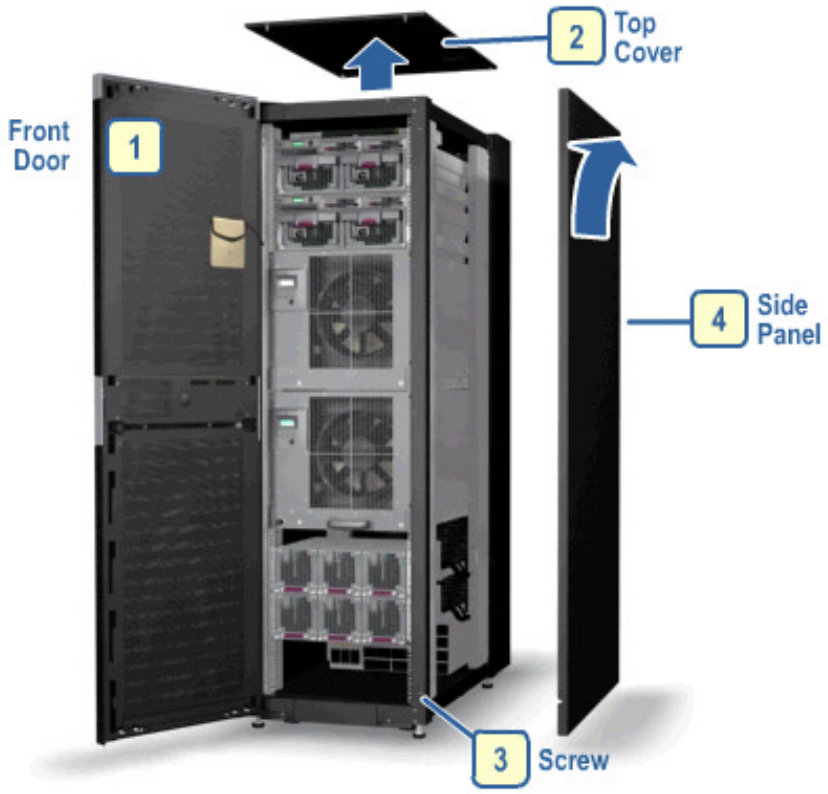

Removal

1. Open the front door.
2. Lift the cabinet top cover and remove.
3. Loosen the screw at the front bottom right or bottom left that will free the side panel you are removing.
4. Lift the panel up until it stops (approximately 2 cm.), pull away from the frame and remove.
5. If you are connecting cabinets, tighten the panel securing screw.

Replacement

1. Hang the panel on the frame by placing its protruding studs in the frame holes designed for that purpose. Be sure all four studs are engaged.
2. Tighten the panel securing screw.
3. Replace the top cover.

Connect and Set Up NAT box

The router box, sometimes referred to as a Cable/DSL router or a Network Address Translation box (NAT box), is the hardware bridge between two networks. In this case we are using NAT boxes to put individual internal LANs on a multi-server LAN or a corporate LAN. SMC makes a device that contains both the functions of a NAT box with a LAN HUB and it is this device we use.

What you need to set up a NAT box.

1. A NAT box. (part of these systems)
2. A choice made by the customer's system manager regarding which of the two possible LANs the system is to be attached to.
3. The following network addresses from the system manager:
   A static IP address and mask for the NAT box on the LAN
   Possibly two DNS addresses
   Possibly two WINS addresses
   A gateway address if applicable
4. Two LAN cables
5. A PC or lap top to set up the NAT box

Overview

There are two sides to the NAT box, the LAN side connecting to the systems internal LAN and the WAN side connecting to either the multi-server LAN or the corporate WAN.

1. To set up the LAN side connect your PC to a port on the internal LAN side of the NAT box.
2. Make sure or configure your PC network connection is set to DHCP.
3. Configure the NAT box to the predetermined Fixed IP address of the NAT box on the internal LAN
   Note: This change of address causes the PC to disconnect from the NAT box.
4. Re-configure your PC to the fixed IP address on the internal LAN.
5. Re-connect your PC to the NAT box and configure the WAN side.
6. Connect the NAT box to the multi-server LAN or to the corporate LAN.

Keep the NAT box's user manual handy.

Reset the NAT box

It is likely that your NAT box has been configured in manufacturing and you will have to reset it before following this procedure.
To reset:

1. **remove all cables from MBMs and PBMs from the LAN side of the box.**
2. **Press and hold the blue reset button for 5 seconds.**
3. **Wait for reset to complete.**

NAT box Installation Procedure

1. Using a BN25G-xx (RJ45) cable connect your PC to any LAN port on the front of the NAT box in the system.
2. Make sure or configure your PC network connection is set to DHCP.
   1. Click the **start** button, select **settings**, and **Network and Dial-up Connections**
   2. Select **local area connections** and click on **properties**.
   3. Select **Internet Protocol (TCP/IP)** and click on **properties**.
   4. Verify or configure the adaptor to **Obtain an IP address automatically**.
   5. Click the **OK button**.
   6. Verify that the NAT box has provided your PC with an IP address. You can see this by bringing up a DOS window and issuing the **ipconfig** command.
      The address given by the NAT box should be **196.168.2.xx**. If you do not get this address, with a pen or pencil press and hold reset button on the front of the box.

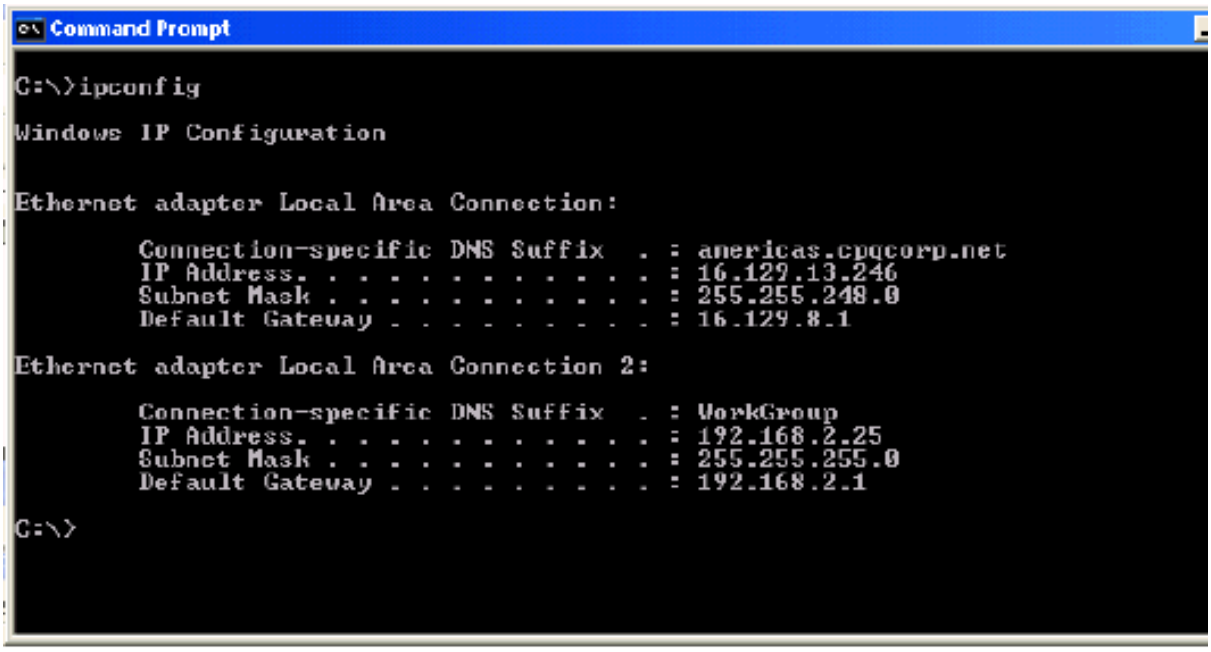

3. Configuring the NAT box.

   Setting up the LAN side of the box

   Bring up an Internet Explorer window on the PC and target the NAT box. Use the IP address given as the Default Gateway by the NAT box (this is

the default, factory set address of the NAT box) - http://192.168.2.1:88.
Once this is done the NAT box login scree appears.
Leave the Password field empty and click on the **Login** button.

The following window appears.

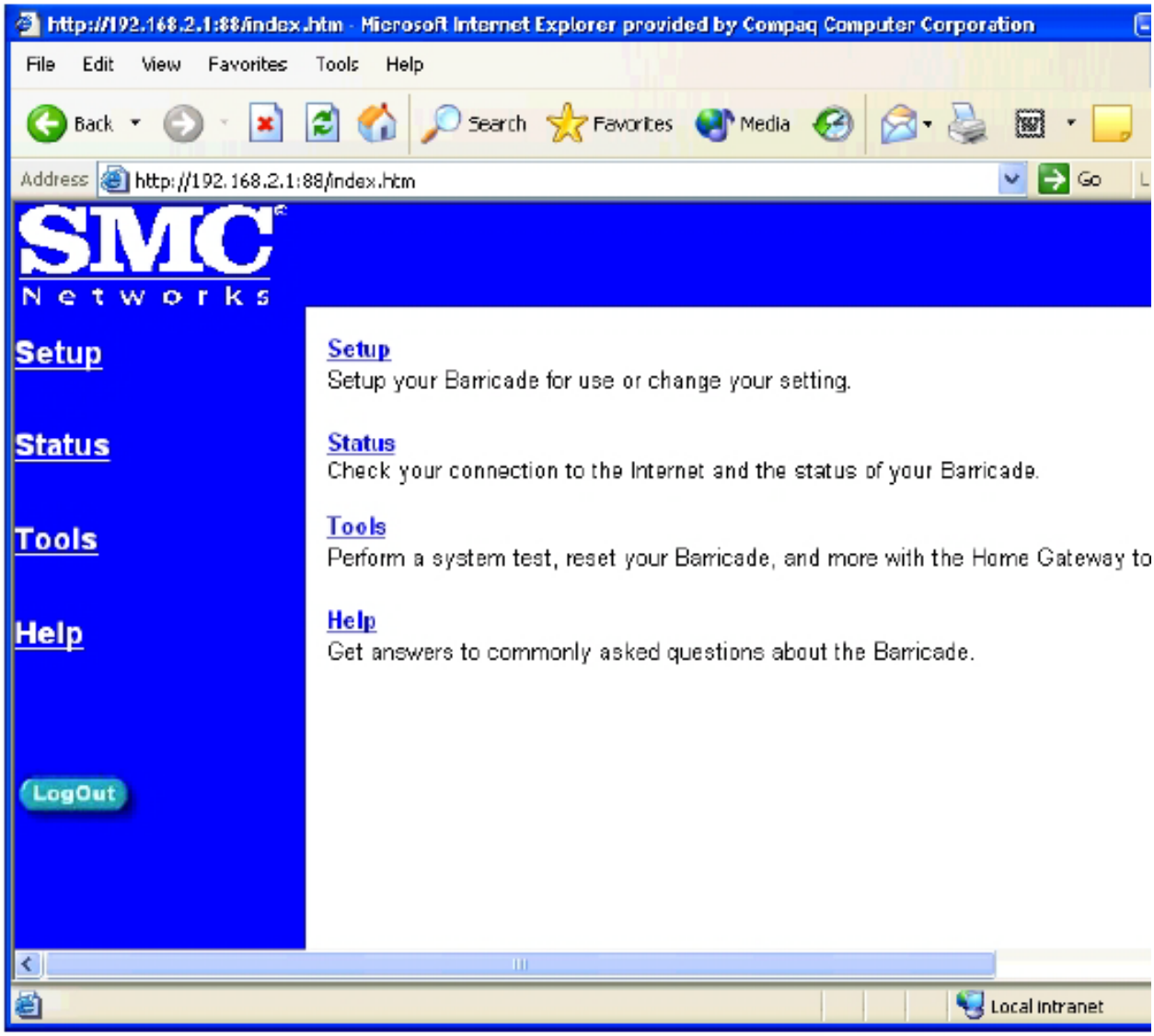

Click on Setup.
Click on Enter to bring up the setup wizard.
Click on Enter again to leave the Password blank.
On the left hand side of this screen select set time zone and set the time.
Click Enter.
Next, on the left hand side, select LAN and the following in screen appears.

Setup | LAN - Microsoft Internet Explorer

File Edit View Favorites Tools Help

Back Search Favorites Media

Address http://192.168.2.1:88/setup_lan.htm

Links Toshiba On the Web Toshiba Support Customize Links Free Hotmail RealPlayer

SMC Networks

Main Setup Status

Change Password

Set Time Zone

LAN

WAN
DHCP
DHCP(BP)
Fixed IP
PPPoE
Modem

DNS

Advanced Settings
Firewall
Virtual Server
Special Application
Client Filtering
Misc

LogOut

Setup | LAN

IP address : 192 . 168 . 2 . 1

IP Subnet Mask : 255.255.255.0

DHCP Server : Enabled Disabled

Lease Time (sec) : Forever

IP address pool

Start IP : 192 . 168 . 2 . 2

End IP : 192 . 168 . 2 . 40

Domain Name : WorkGroup

Click ENTER to save settings and

Start Command Prompt Setup | LAN - Microso...

On this screen change the IP address from 192.168.2.1 to 10.253.0.2. (this now becomes the address of the NAT box on the internal LAN.)
Leave the subnet mask as is and disable the NAT box's DHCP Server. (When you disable the DHCP server, the IP address pool addresses are ignored.)

Once the IP address is entered and Disable DHCP is selected, press **Enter**.

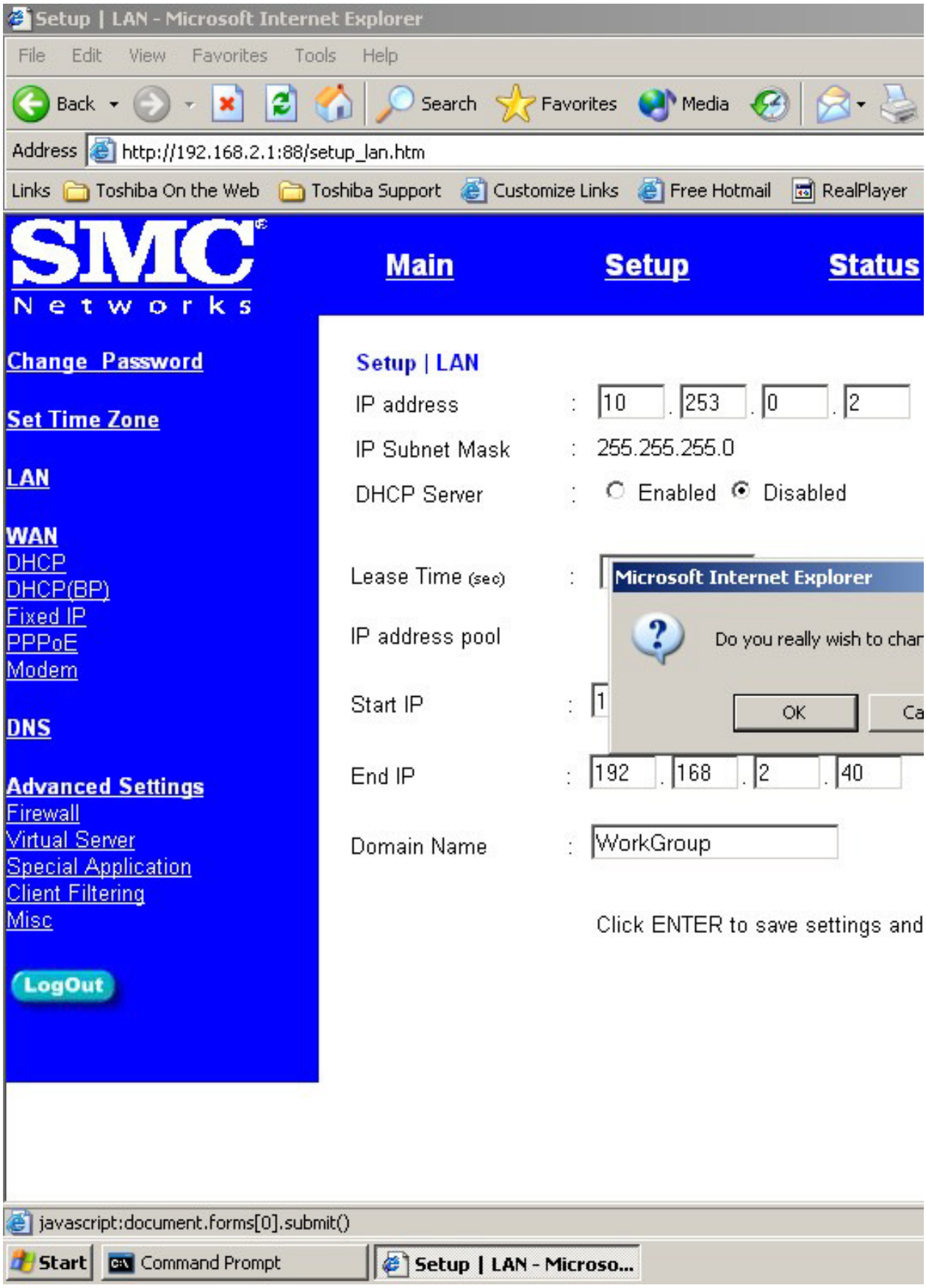
Setup | LAN - Microsoft Internet Explorer
File Edit View Favorites Tools Help
Back Search Favorites Media
Address http://192.168.2.1:88/setup_lan.htm
Links Toshiba On the Web Toshiba Support Customize Links Free Hotmail RealPlayer
SMC Networks
Main
Setup
Status
Change Password
Set Time Zone
LAN
WAN
DHCP
DHCP(BP)
Fixed IP
PPPoE
Modem
DNS
Advanced Settings
Firewall
Virtual Server
Special Application
Client Filtering
Misc
LogOut
Setup | LAN
IP address : 10 . 253 . 0 . 2
IP Subnet Mask : 255.255.255.0
DHCP Server : Enabled Disabled
Lease Time (sec) :
IP address pool
Start IP : 1
End IP : 192 . 168 . 2 . 40
Domain Name : WorkGroup
Click ENTER to save settings and
Microsoft Internet Explorer
Do you really wish to char
OK
Ca
javascript:document.forms[0].submit()
Start
Command Prompt
Setup | LAN - Microso...

Continue on the next screen. The NAT box immediately changes its address to 10.253.0.2, its address on the internal LAN and the connection to your PC through Internet Explorer is broken.

To re-connect to the NAT box you must re-configure your PC to an internal LAN address on the system. (Suggested address - 10.253.0.3.)
Do that by following the procedure:
Click on **start**, **settings**, **network and dial-up connections**.
Select **local area connections**.
Click on **properties**.
Select **Internet protocol (TCP/IP)**
Change from **Obtain an IP address automatically** to **Use for following IP address**.
Enter the following in the Internet Properties (TCP/IP) Properties Box:

Field	**Enter**
IP address field	10.253.0.3 - the first available address on the internal LAN's address pool.
Subnet mask field	255.0.0.0
Default gateway	leave blank

You do not need to add information about a DSN server.
Back out of all the dialog boxes by clicking on **close**.

Setting up the WAN side of the box

Re-establish your Internet Explorer connection to the NAT box by entering the address http://**10.253.0.2**.
The NAT login screen appears.
Re-login to the NAT box; leave the user name and password blank.

Again select **setup**.
This time click on **WAN**.
Select **static IP address** and click on **More Configuration**.

Enter the following:

Field	**Enter for multi-server LAN**	**Enter for Corporate LAN**
IP address assigned by your ISP field	Provided by the customer. (we recommend: 90.0.100.1 for the first sys. 90.0.100.3 for the second; 90.0.100.5 for the	Provided by the customer. This is the address of the NAT box on the Corp-LAN.

	third...)	
Subnet Mask field	255.255.0.0	255.255.0.0 (or provided by the customer)
ISP Gateway Address field	90.0.0.102	If the customer follows our suggested addressing, this is the address of the AMS on the corporate LAN. If the customer did not follow our suggested addressing scheme, you'll have to get this address from the customer.

Like this:

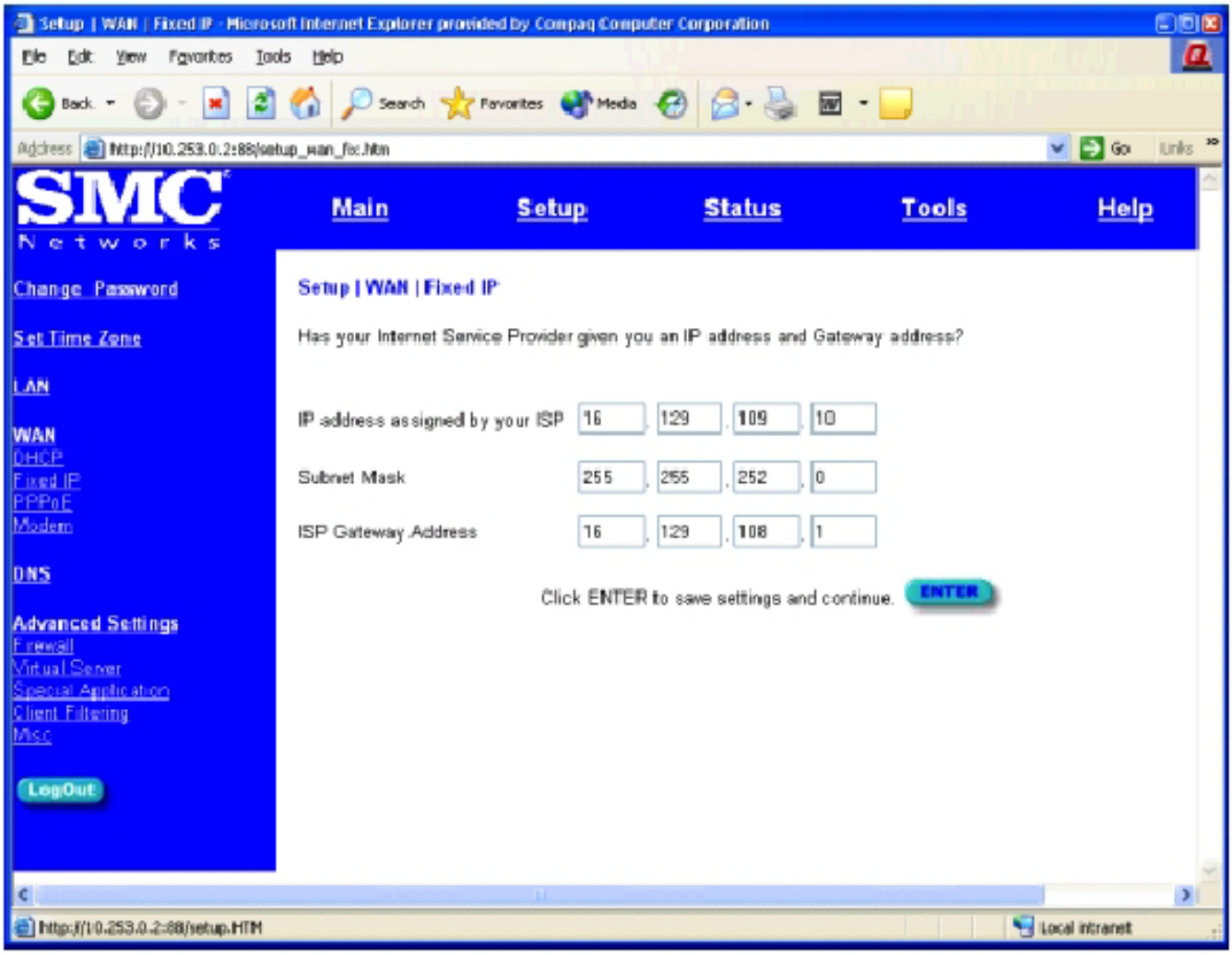

Click **Enter**.

If the customer uses a Domain Name Server on the WAN to which the NAT box connects, enter the address assigned by the customer. These two addresses are necessary only if the customer uses a Domain Name Server. Note that these addresses are WINS addresses and differ from DNS addresses.

Field	**Enter**
Domain Name Server (DNS) address	Provided by the customer
Secondary DNS Address	Provided by the customer.

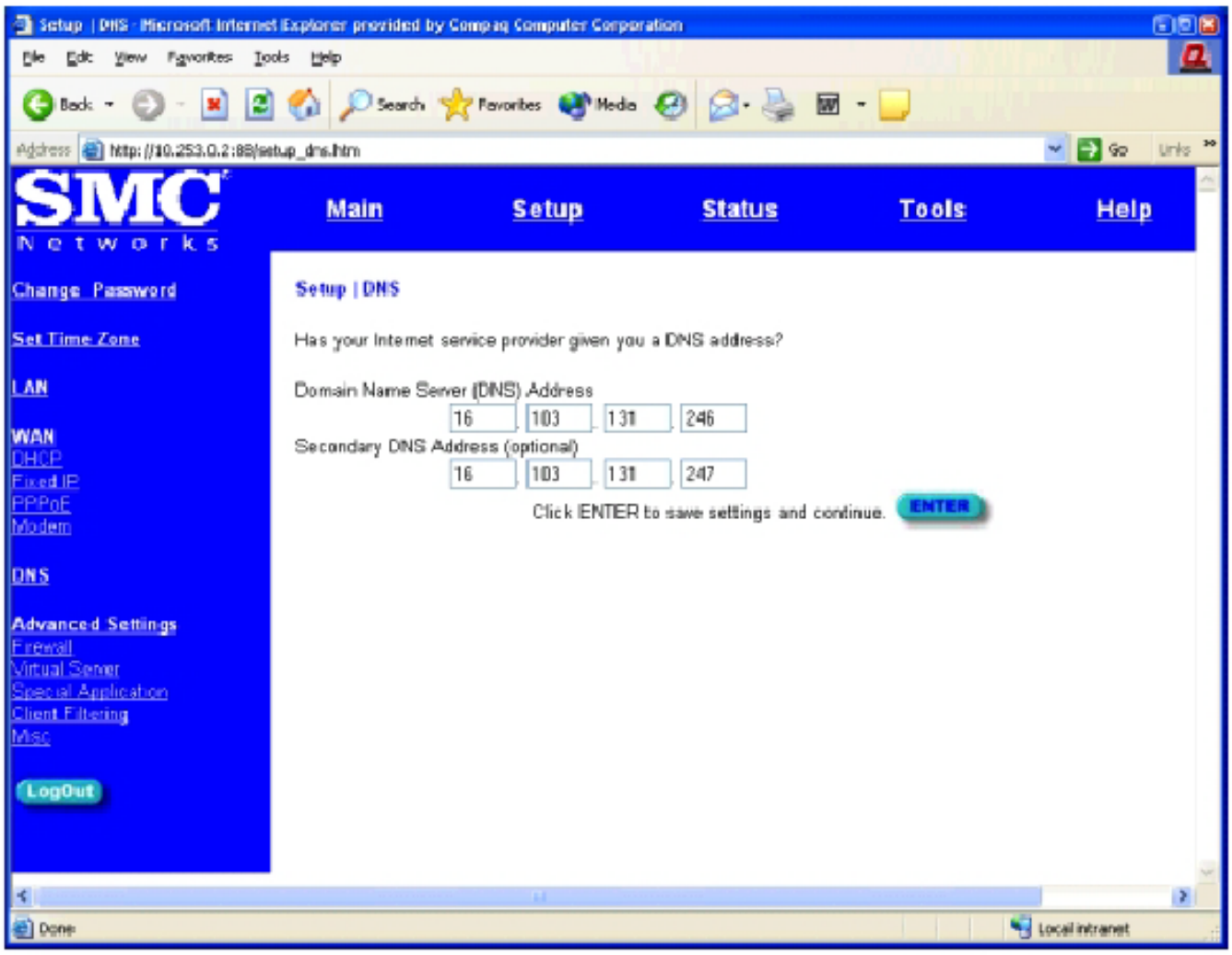

Click **Enter**.
The following Advanced Settings screen appears:

Setup | Advanced Settings - Microsoft Internet Explorer

File Edit View Favorites Tools Help

Back Search Favorites Media

Address http://10.253.0.2:88/setup_advanced.htm

Links Toshiba On the Web Toshiba Support Customize Links Free Hotmail RealPlayer Winc

SMC Networks

Main Setup Status

Change Password

Set Time Zone

LAN

WAN
DHCP
DHCP(BP)
Fixed IP
PPPoE
Modem

DNS

Advanced Settings
Firewall
Virtual Server
Special Application
Client Filtering
Misc

LogOut

Setup | Advanced Settings

The Barricade supports advanced functions like hacker attack detect
application access, virtual DMZ host, and client filtering.

We highly recommend you keep the default settings.

Click ENTER to cc

http://10.253.0.2:88/setup_firewall.htm

Start Command Prompt Setup | Advanced Se...

Ignore the warning and click **Enter**.
The first Advanced setting screen allows you to leave on or turn off the firewall.
Click the **no** button disabling the firewall and then **enter**.
The Virtual Server screen appears which you disregard.
On the left side of the screen click on **Misc** and the following screen appears.

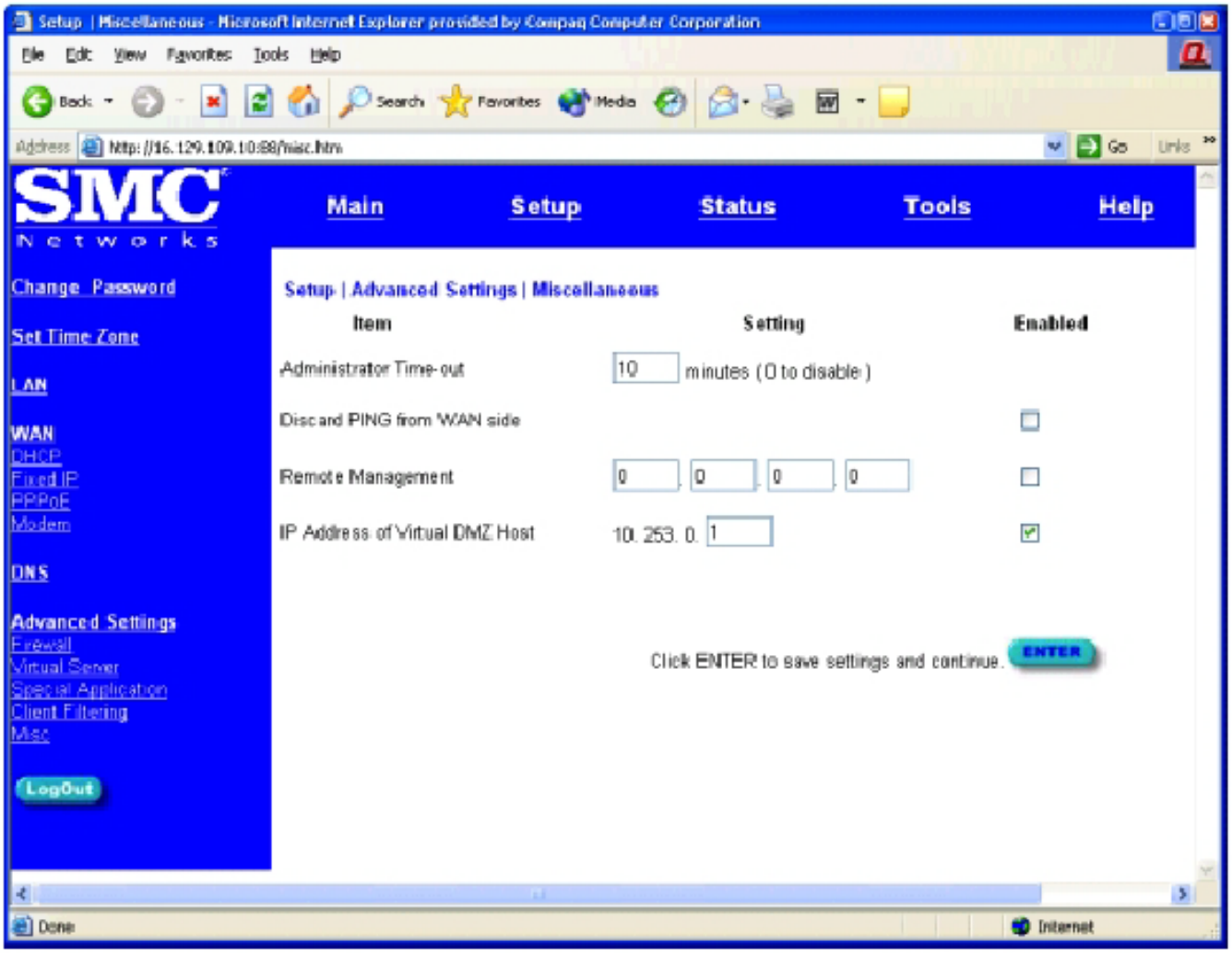

The virtual DMZ host needs to be enabled and its address set to 10.253.0.1.
Place a **1** in the input box setting up the IP Address of the Virtual DMZ host
Click the **Enable** checkbox next to this field and then click **Enter**.

The NAT box setup is now complete.

Use the second BX25G-xx cable to connect the NAT box's **WAN connection** to the HUB set up for the multi-server LAN, or to a drop on the corporate LAN.

Console Connections

Connect Directly to the Internal LAN

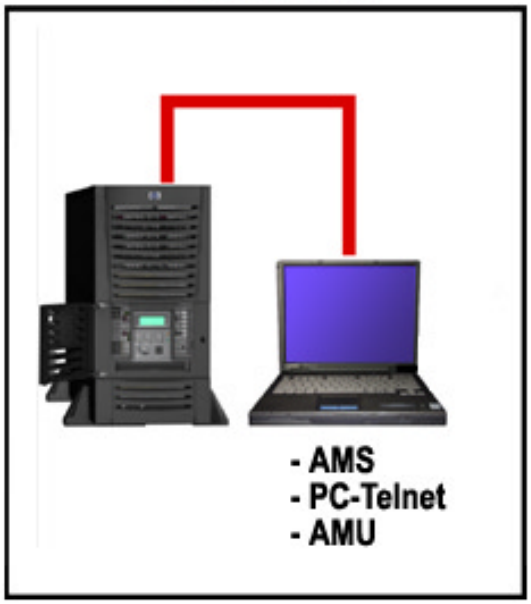

Connect to an AlphaServer Management Station (AMS)

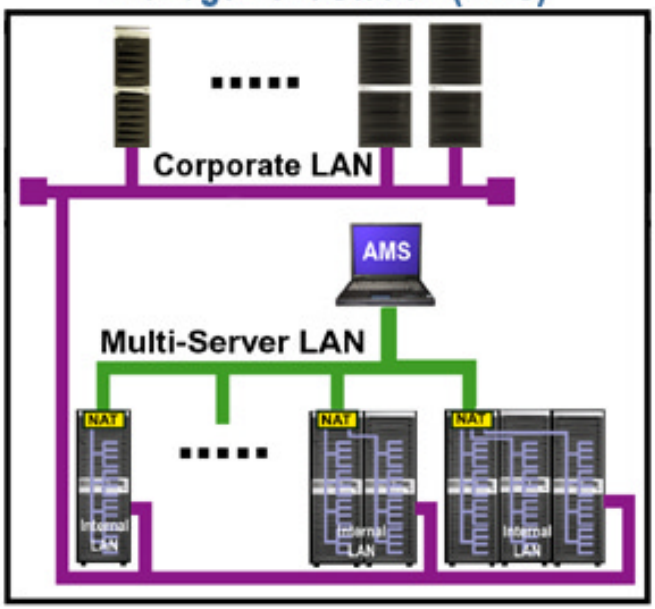

Connect the Corporate LAN to an AlphaServer Management Station (AMS)

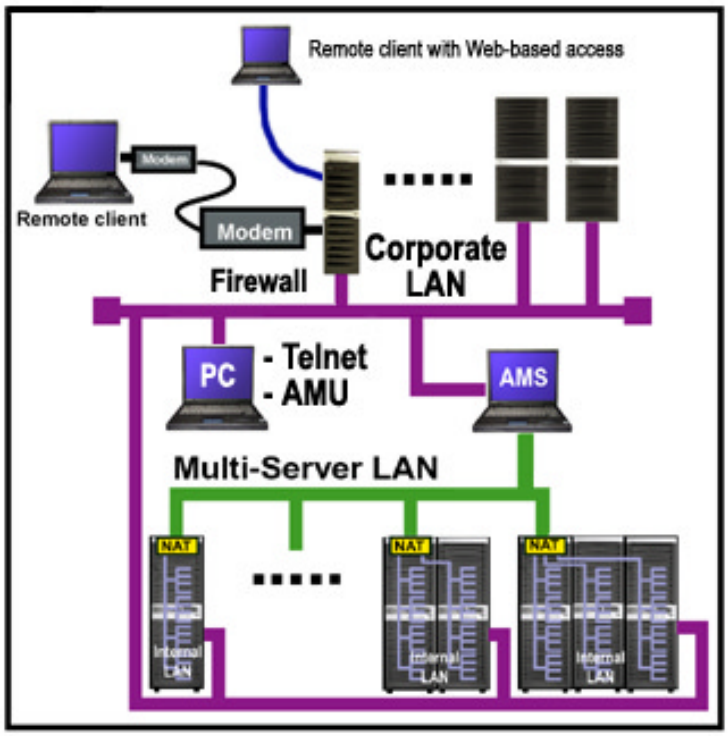

Connect the Internal LAN to the Corporate LAN

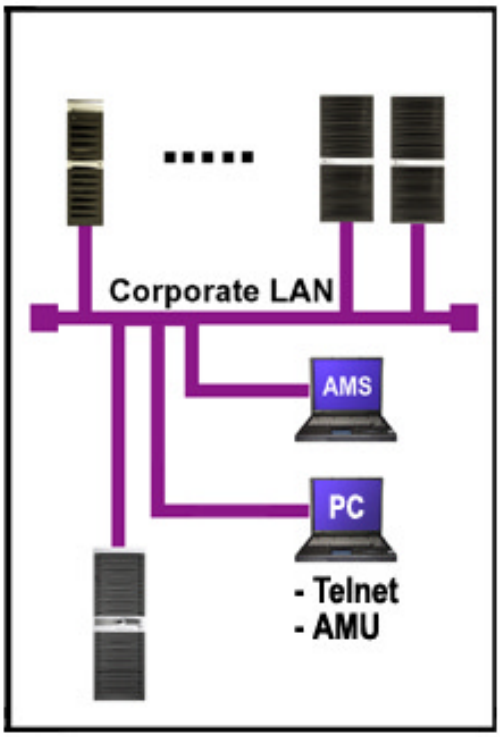

With the advent of partitions and complex computer room environments, traditional single consoles for each system and partition are becoming obsolete. These systems use an internal LAN for server management operations like booting and configuring the system environment. There are several ways to connect consoles to the system. There are three LANs to consider: the internal LAN in the system, the multi-server LAN, and the corporate LAN. You should work with the customer to decide how the console(s) should be connected.

Connect a PC to the NAT Box

1. Using a BN25G-xx cable connect a PC/laptop to the WAN side of the NAT box.
2. When you set up the NAT box you establish a network address for the WAN side of the NAT box. If you followed the directions, the WAN side of the NAT box has an address of 90.0.100.1
3. Start a telnet session on your PC to address <nat box address>:23 (23 is the PMUs port address)
4. The MBM> prompt should appear on your PC.

Using this console you can manage the system using Telnet or the AlphaServer Management Utility. Refer to the AMS 1.1.0 CD for instructions on installing and using the AlphaServer Management Utility (AMU) from a PC running Windows.

Connect a AlphaServer management Station

1. Set up the NAT box between the internal LAN and the multi-server LAN.
2. Use the second BX25G-xx cable to connect the NAT box's **WAN connection** to the HUB set up for the multi-server LAN.
3. Set up the AMS on the multi-server LAN.
4. Install the AMS software. Refer to the AMS 1.1.0 CD for instructions on installing and using the AlphaServer Management Station (AMS) from an AlphaServer workstation running Tru64 UNIX.

Connect the corporate LAN to the AMS

1. Set up the NAT box between the internal LAN and the multi-server LAN.
2. Use the second BX25G-xx cable to connect the NAT box's **WAN connection** to the HUB set up for the multi-server LAN.
3. Set up the AMS on the multi-server LAN.
4. Set up the AMS on the corporate LAN.
5. Install the AMS software. Refer to the AMS 1.1.0 CD for instructions on installing and using the AlphaServer Management Station (AMS) from an AlphaServer workstation running Tru64 UNIX.

Connect from the corporate LAN to the internal LAN

1. Setup the NAT a box between the internal LAN and the corporate LAN.
2. Start a telnet session on your PC to address <nat box address>:23 (23 is the PMUs port address)
3. The MBM> prompt should appear on your PC connected to the corporate

LAN.

If you wish to use AMU, refer to the AMS 1.1.0 CD for instructions on installing and using the AlphaServer Management Utility (AMU) from a PC running Windows.

Rules for Setting Cabinet IDs

Each cabinet has a unique ID defined by the setting of the push-wheel switch on the back of the door OCP. The following rules apply to cabinet IDs:

1. The left most system cabinet has an ID of 0.
2. All subsequent cabinet IDs are incremented as cabinets are added to the platform first to the right and then to the left of the first system cabinet. (Orientation is the front of the system.)

The result of these rules is that all cabinets to the right of cabinet 0 have odd ID numbers and all cabinets to the left of cabinet 0 have even ID numbers.

Rules for Setting Drawer IDs

For each cabinet no matter whether it is a system cabinet, power cabinet, or expander cabinet, the following rules apply:

1. Platform component push-wheel numbering begins with 0.
2. CPU drawers are numbered first, power subracks second and IO drawers third.
3. Components are numbered sequentially from bottom to top.

Component	Push-wheel ID	location in cabinet	Note
2P or 8P drawer	sequentially from 0 to n	Drawer closest to the floor is 0	Drawer above 0 is 1, drawer above 1 is 2...
Power subracks	sequentially from n+1 to m	Power subrack closest to the floor is n+1	n = highest numbered 2P or 8P drawer
I/O drawers	sequentially from m+1 to p	I/O drawer closest to the floor is m+1	m = highest numbered power subrack

Example 1: a system cabinet with two 8P drawers, two power subracks, and two I/O drawers would have the following IDs:

8P drawers	0 and 1
Power subracks	2 and 3
I/O drawers	4 and 5

Example 2: a power cabinet with four power subracks and four I/O drawers would have the following IDs:

Power subracks	0 through 3
I/O drawers	4 through 7

LAN Addressing

The thirty two bit private LAN address is defined as follows:

nnnnnnnn. mmmmmmmm . pppppppp . eeeeeeee

The value of mmmmmmmm determines the meaning of the values of pppppppp and eeeeeeee.

LAN Address

The LAN address = nnnnnnnn = 10

Cabinet ID

Cabinet IDs are unique and are determined by the setting of the OCP push-wheel on each cabinet door. Each cabinet must have a unique number. Cabinet IDs are represented in network addresses in two ways depending upon whether you are addressing components in system space or components in IO space:

1. When addressing system space components like MBMs, CMMs, and CPUs, the upper 4 bits of mmmmmmmm are the cabinet ID number.
2. When addressing IO space components like the PBM, mmmmmmmm = 254 and eeeeeeee = the cabinet ID.

The valid range for the cabinet ID set by the push-wheel on the cabinet door is 0 to 7.

MBM ID

The MBM ID is set by the push-wheel on the 2P or 8P drawer. This ID corresponds to the address of the backplane in the drawer and is fundamental in determining other physical addresses for both the system and the server management LAN. The lower four bits of mmmmmmmm are the MBM ID number. Thus mmmmmmmm = a specific MBM in a specific cabinet. With this unique number, firmware determines addresses for memory, CPUs, and the port locations for north, south, east, and west IP ports.

The valid range for the MBM ID set by the push-wheel on both the 2P and 8P drawers are 0 to 3.

PBM ID

The PBM ID is set by the push-wheel on the IO drawer. When mmmmmmmm = 254, pppppppp = the PMB ID set by the push-wheel on the OCP of the IO drawer.

Network ID Table

	If mmmmmmmm = Cabinet ID + MBM	**If mmmmmmmm = PBM flag (254**	**If mmmmmmmm = special (253 decimal)**

	push- wheel	**decimal)**	
nnnnnnnn	network number (10 decimal)	network number (10 decimal)	network number (10 decimal)
mmmmm mmm	MBM in cab0, 1-4 MBM in cab1, 11-14	254	See special addresses
pppppppp	0 for MBM, 1-4 for CMM	PBM push-wheel	See special addresses
eeeeeeee	0 for CMM itself, 1-2 for EV7 ID, when MBM specified, default = 1	Cabinet ID push-wheel	See special addresses

Some examples

Device		**Comment**
MBM	10.1.0.1	MBM cabinet ID 0, drawer ID 1 (eeeeeeee default = 1)
PBM	10.254.1.0	PBM cabinet ID 0, drawer ID 1
CMM	10.2.1.0	CMM #1 connected to MBM 2
EV7	10.2.1.2	second EV7 connected to CMM 1 connected MBM 2

Special Addresses

	Address	**Comment**
PMU server	10.253.0.1	Address used to get to the PMU
Route for NXMs	10.253.0.2	default address for addresses not in the proper range of addresses
Telnet server	10.253.0.3	Dedicated address for a telnet session
DHCP addresses	10.253.0.4-253	DHCP address pool
Dedicated PMU address	10.253.0.254	For VMS use

Set up the AMS on the Corporate LAN

You will need a fixed address for the AMS on the corporate LAN which you'll have to get from the customer. You'll also need to know what mask is used on the network and get a name for the AMS if the customer wants one.

This example uses a DS10 as the AlphaServer Management Station.

Setup the AMS

1. Login to an account with Administration privileges on the AlphaServer Management Station.
2. At the # prompt type **sysman**
3. The following screen appears:

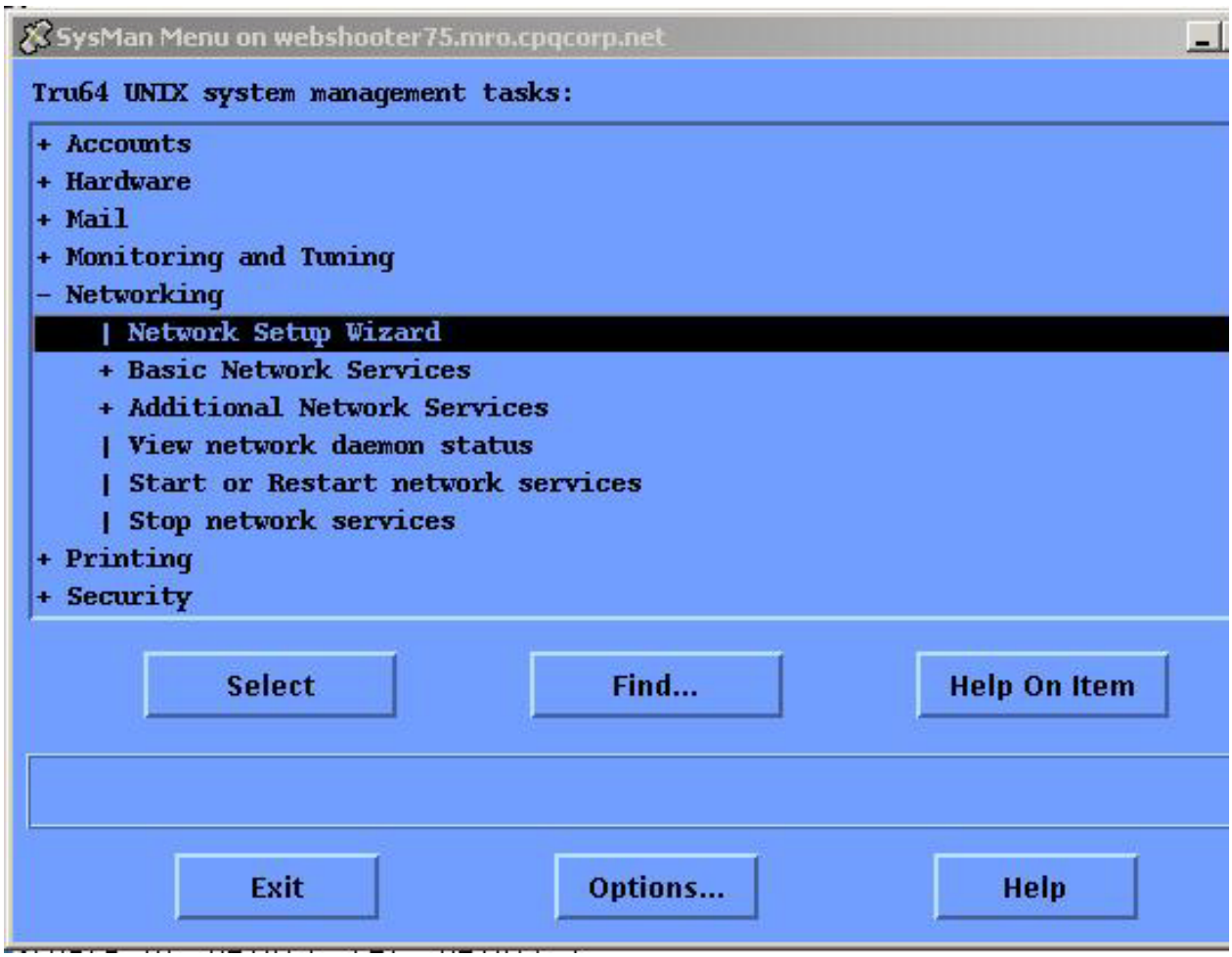

4. Select "Network Setup Wizard" and click on the Select button.
   The following screen appears:

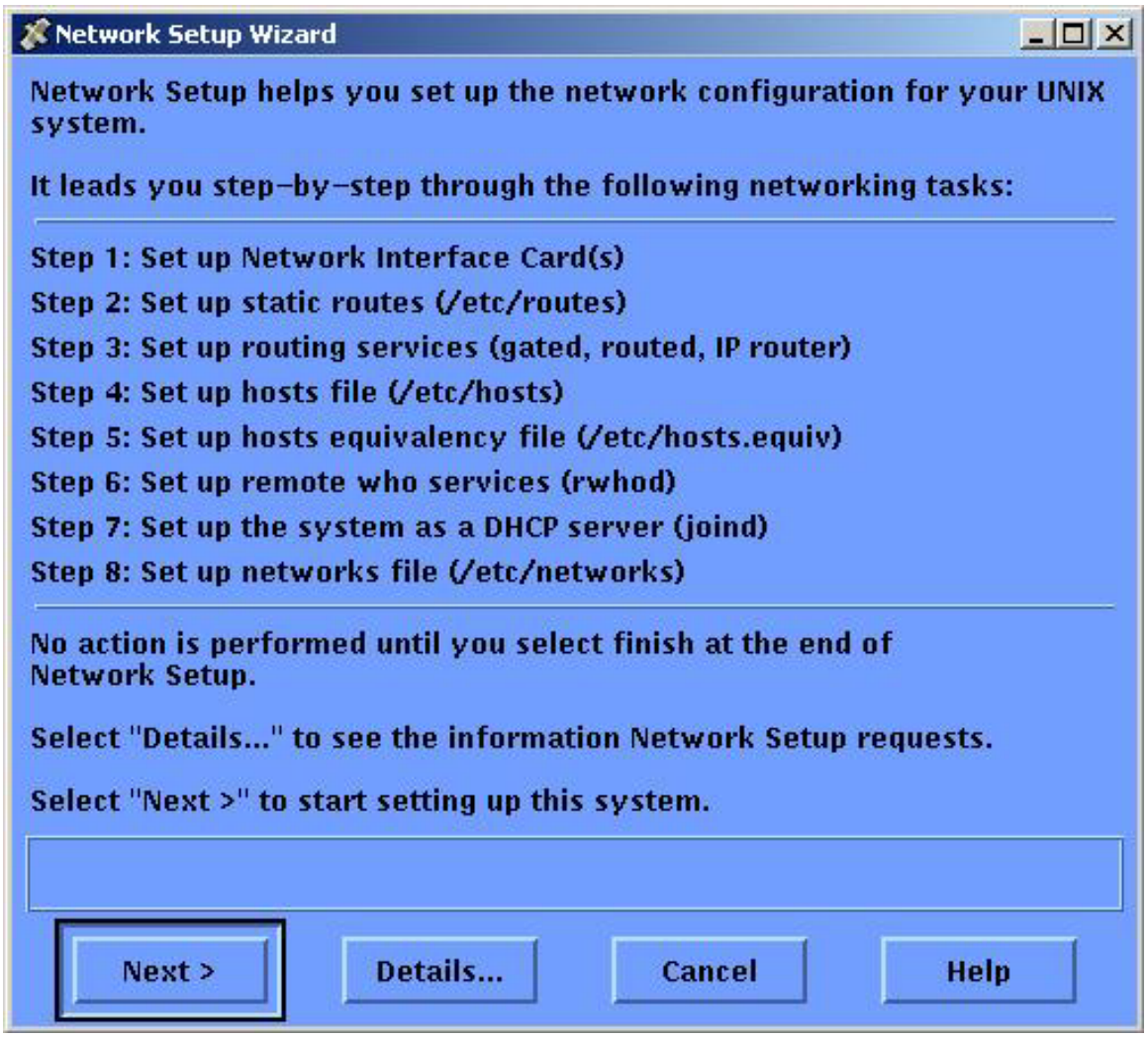

5. Click on the Next> button
   The following screen appears:

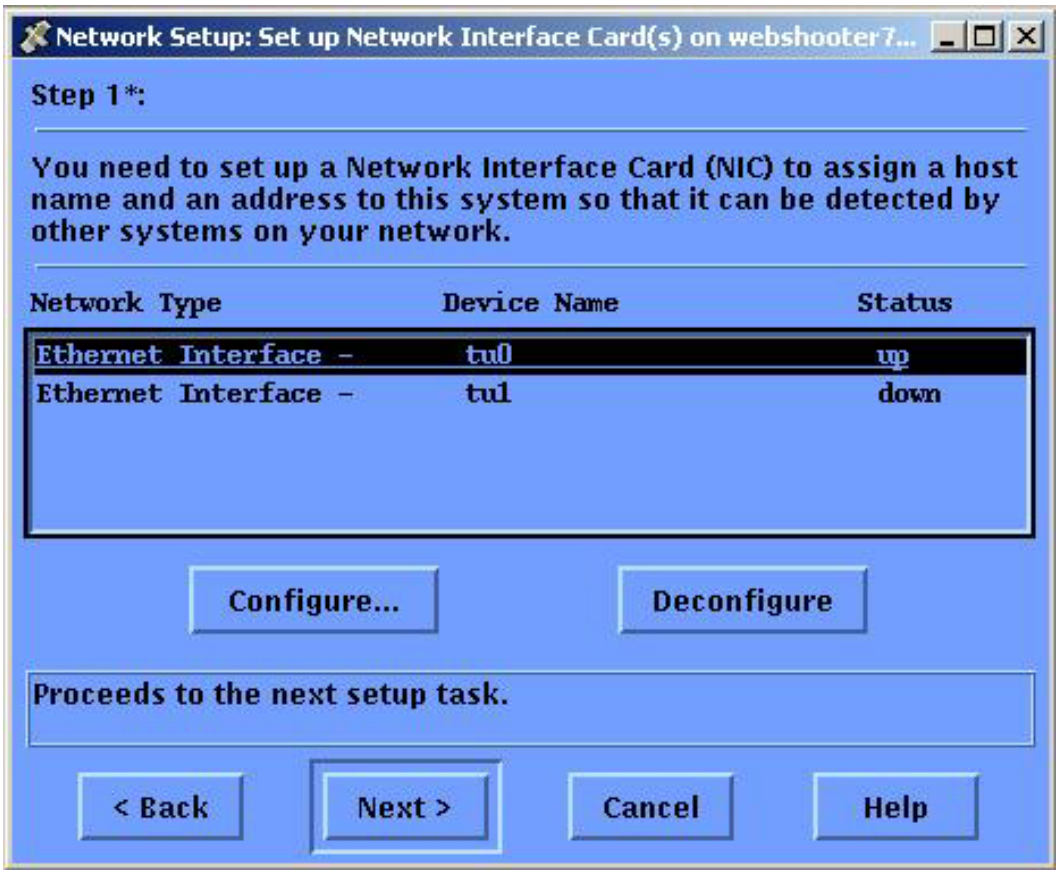

6. Click on the Configure button.
   The following screen appears:

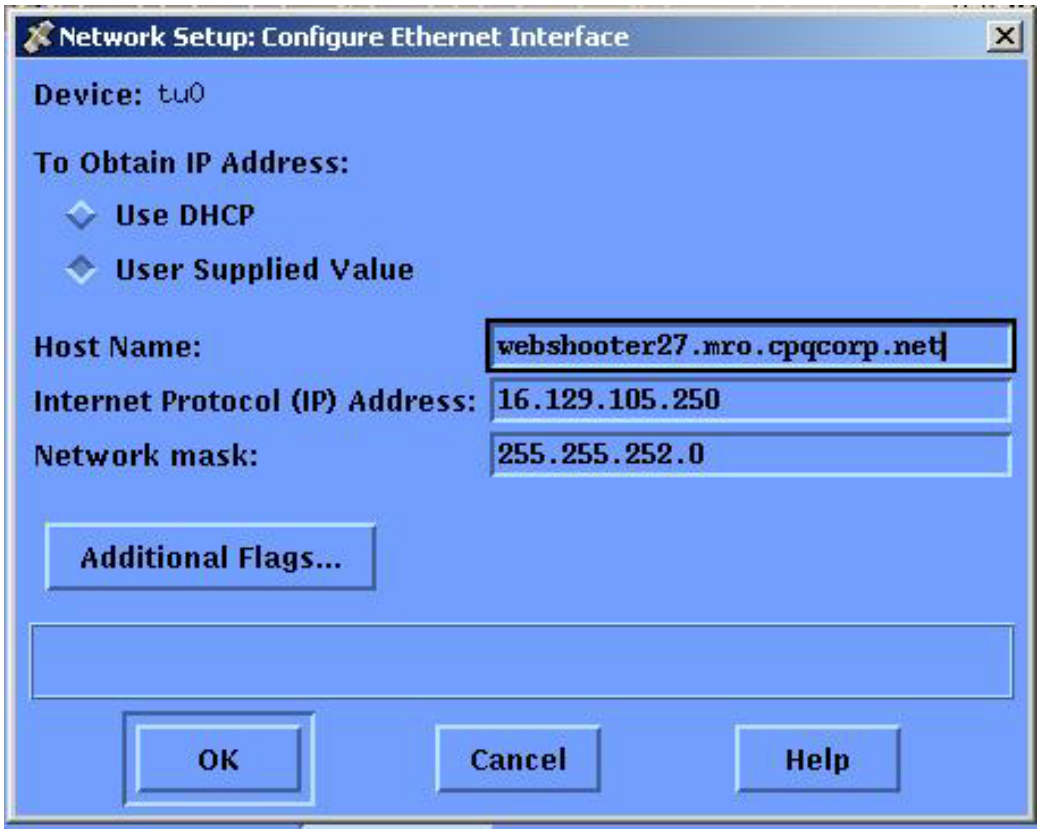

7. Click the User Supplied button.
   Enter the Host Name - a name created by the customer for the AMS on the corporate LAN.
   Enter the address of the AMS on the corporate LAN (Address supplied by the customer)
   Enter the network mask: in this case 255.255.252.0 - supplied by the customer
   Click the OK button.
8. Use a BN25G-xx (RJ45) cable to connect tu0 to the corporate LAN HUB.

Setup the AMS on the MS LAN

Since the multi-server LAN is a network owned and operated by the customer, we recommend that you use a TCP/IP address of the form 90.0.100.x for systems and a fixed address 90.0.0.102 for the AMS on that network. The example used here reflect that addressing scheme. If the customer uses or wants some other addressing scheme, you will need addresses he/she specifies.

This example uses a DS10 as the AlphaServer Management Station.

Setup the AMS

1. Login to an account with Administration privileges on the AlphaServer Management Station.
2. At the # prompt type **sysman**
3. The following screen appears:

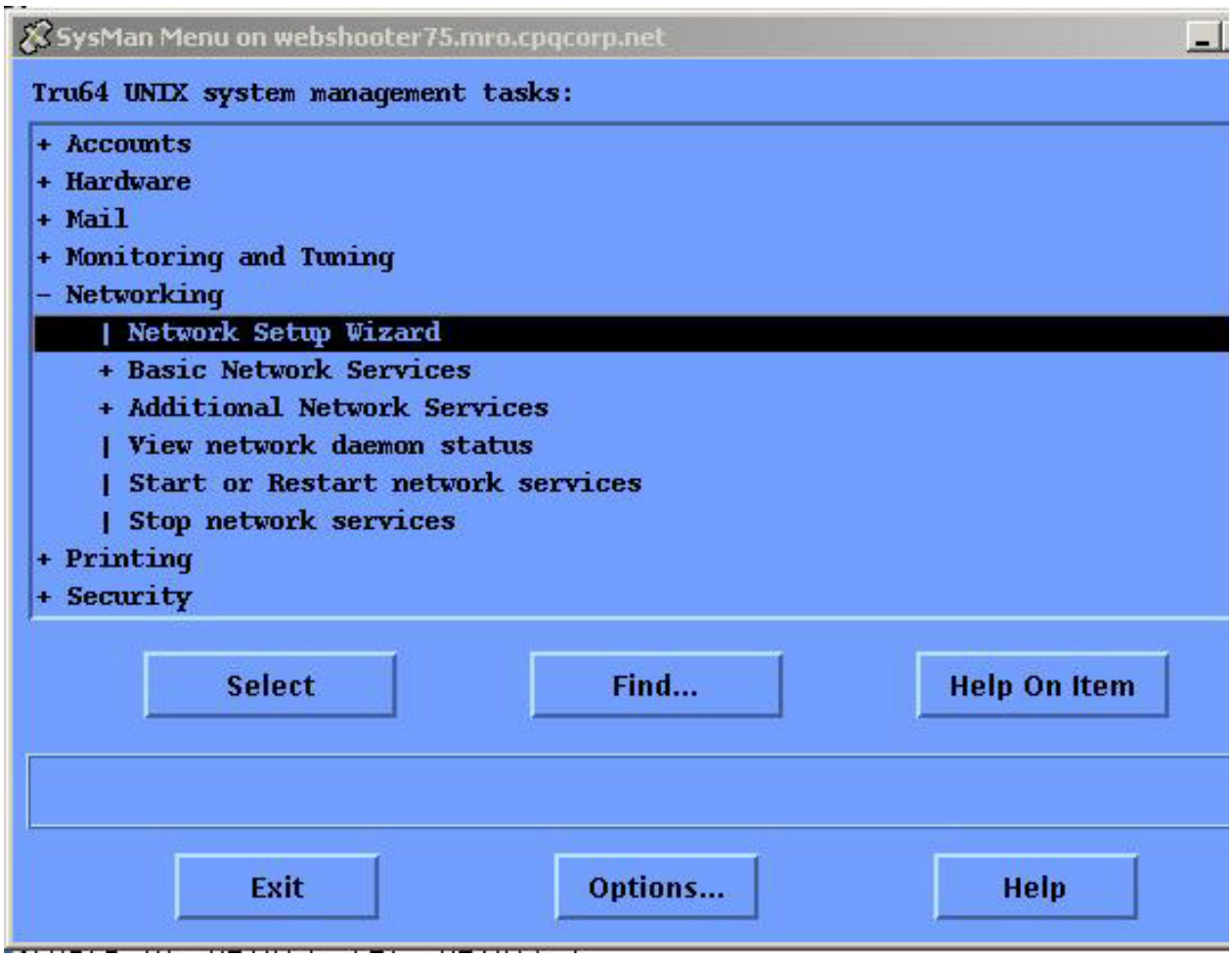

4. Select "Network Setup Wizard" and click on the Select button.
   The following screen appears:

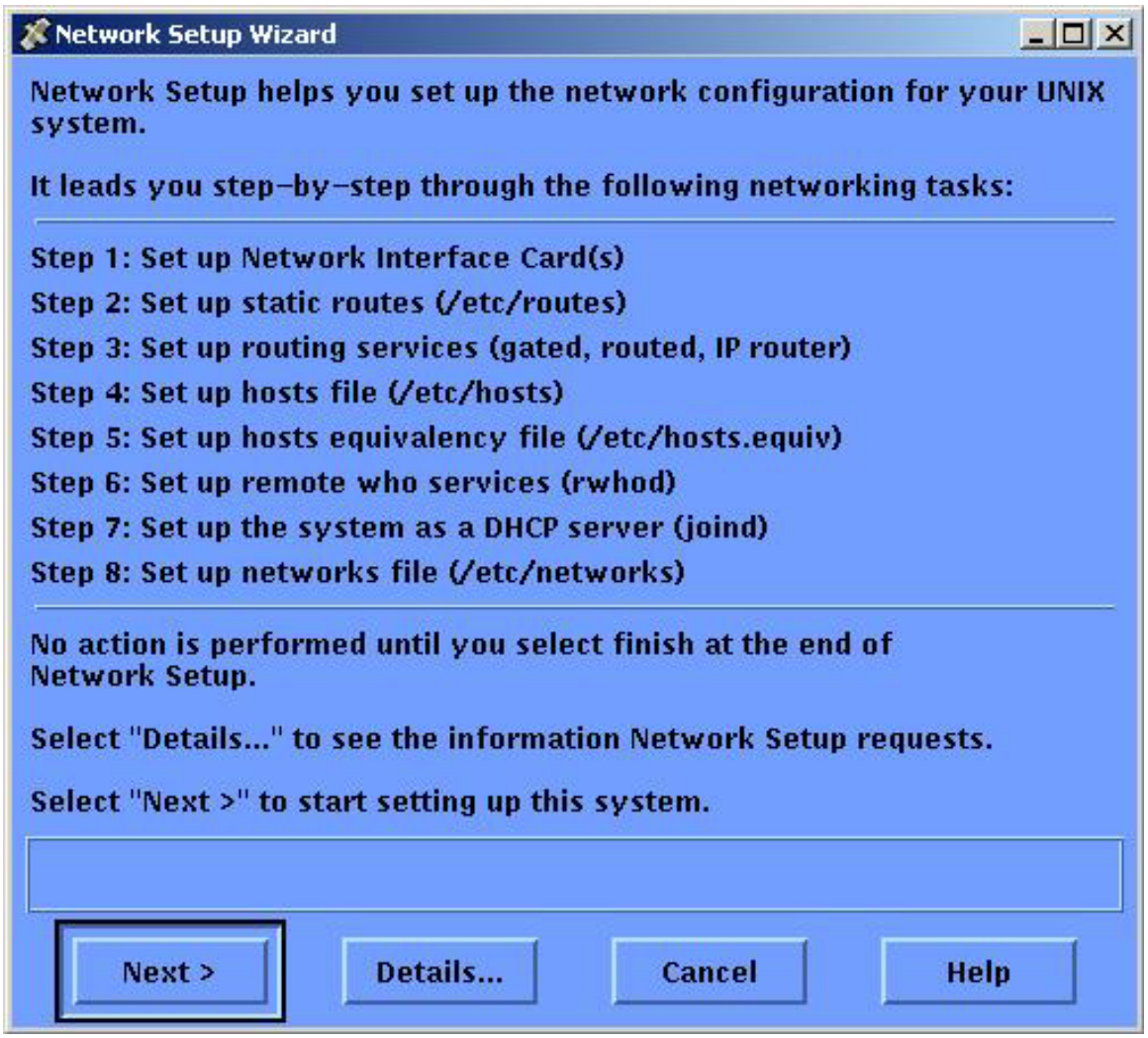

5. Click on the Next> button
   The following screen appears:

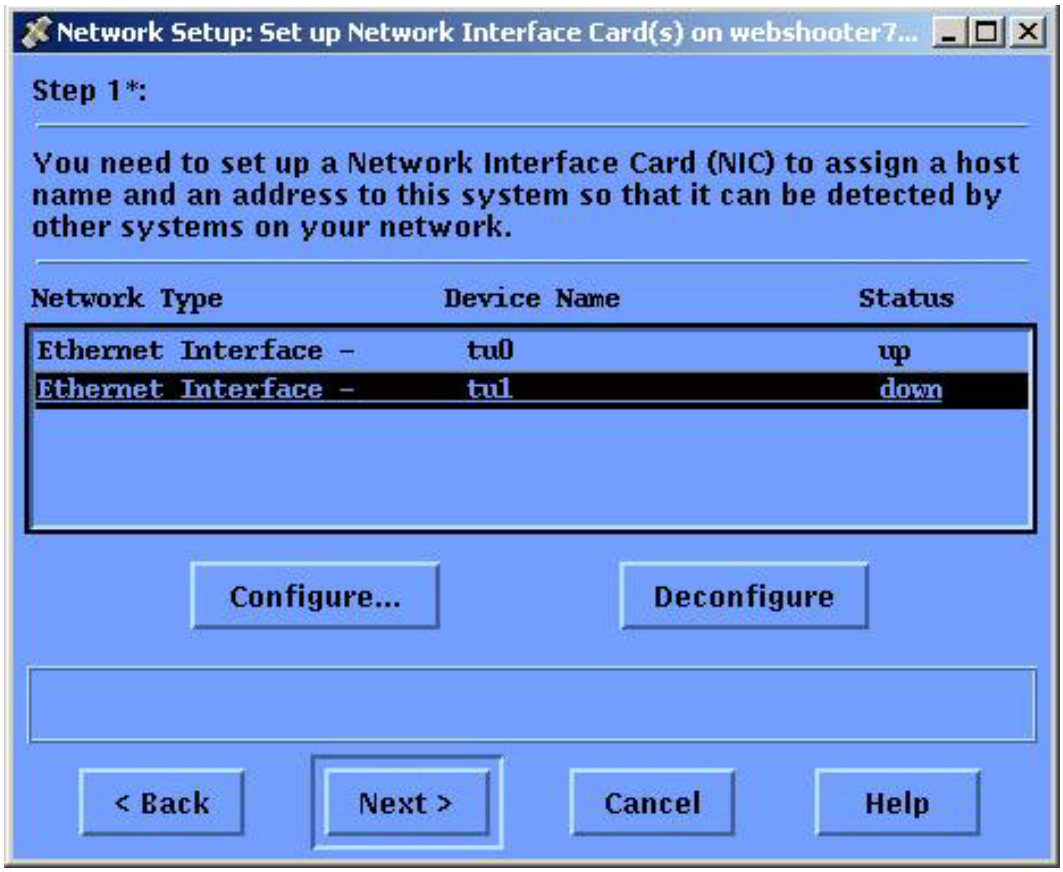

6. Click on the Configure button.
   The following screen appears:

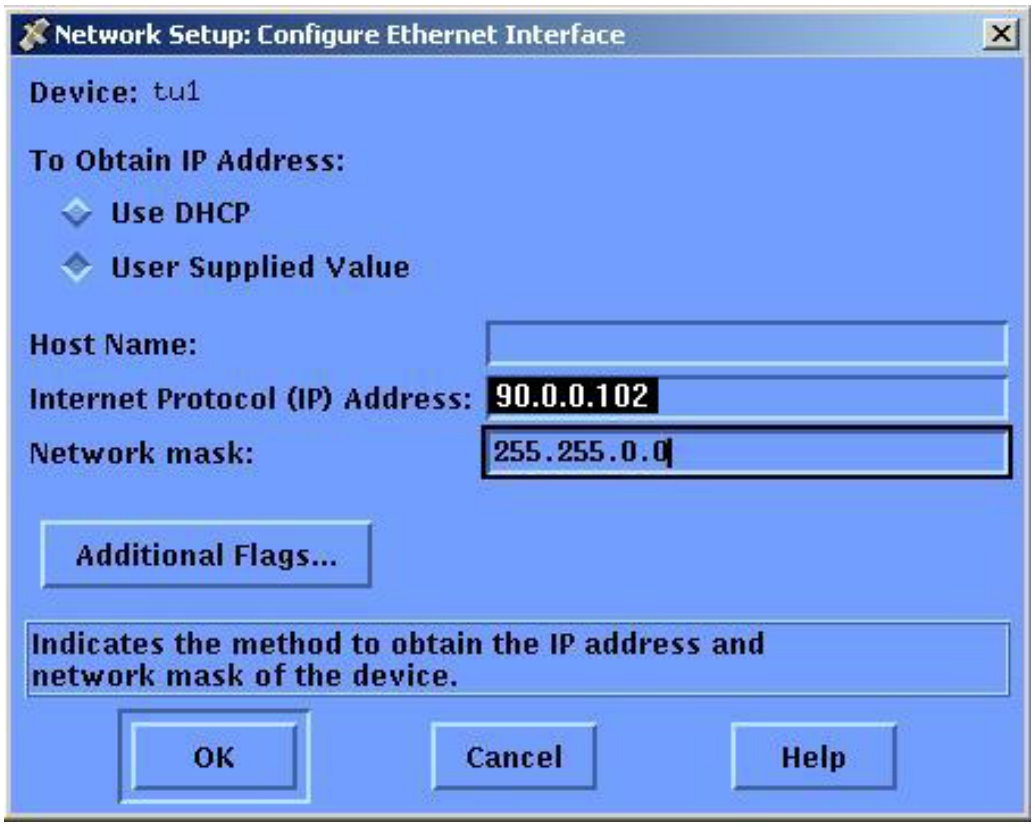

7. Click the user Supplied button.
   Enter the address of the AMS on the multi-server LAN (90.0.0.102)
   Enter the network mask (255.255.0.0)
   Click the OK button.
8. Use a BN25G-xx (RJ45) cable to connect tu1 to the multi-server LAN HUB.

Powering Up the System

In general when the system is plugged in and the circuit breakers on the power distribution unit(s) are in the on position, the display on the console will be the MBM> prompt.

When the key switch on the cabinet door or tower OCP is put into the on position power up will begin and its progress traced on the console screen and on the OCP display.

Basically what happens is that the microprocessors on the internal LAN go through a process of self discovery, form a group, and select a leader or primary MBM that controls testing and the power-up sequence. Once the server management micros on the LAN form their group, are stable, and the power to the system is on, SROM tests are run on the CPUs.

There are two SROM tests, one that gets the results of the CPUs power on self test (POST) which tests the internal caches of the EV7 chip, and one that tests the chip's internal Bcache.

With the results of the SROM tests, the server management firmware is able to build a map of the system.

Once that is done, XSROM tests are run.

XSROM tests are grouped as follows:

- memory (8)
- I/O (8)
- Router (6)
- Interrupts (7)

If tests fail, a new grid is formed that conforms to routing rules and the system is re-tested. Once the tests complete, pass, and the environment variable autoconnect is set, the SRM Console gets loaded. The SRM continues to test and probe until it has a complete view of the system's configuration and condition. Once that is accomplished, either the system will boot the operating system or remain running the console as is the case in the example.

OCP ES47 Tower

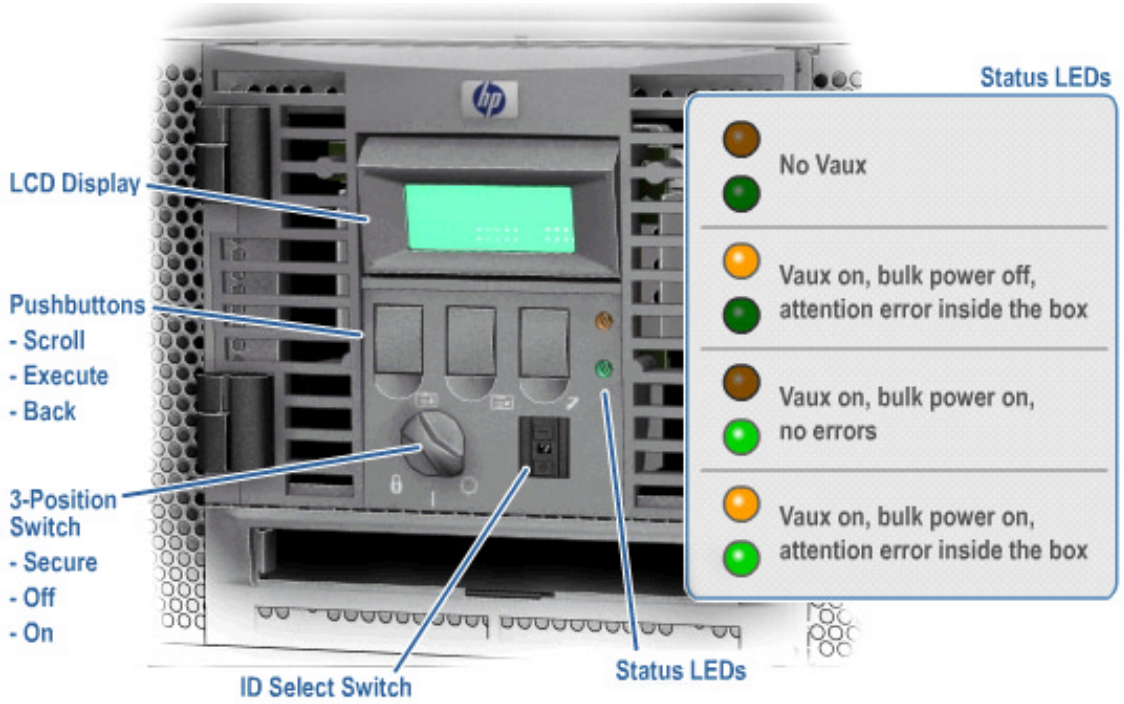

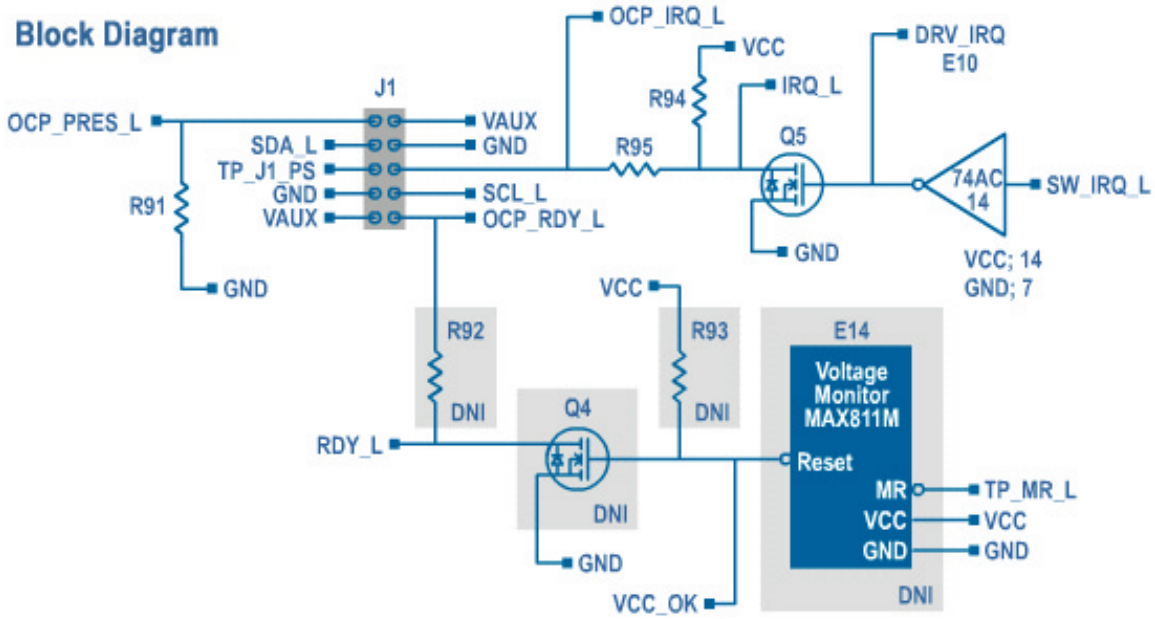

The system can be controlled by the OCP. The MBM listens to the OCP switch and pushbuttons. When the state of the switch changes from off to on, the machine responds by executing its power-up routines, traces of which you'll see on the OCP display and on the console, if you are using an AMS or PC as a console.

If you are using a graphics terminal, you will not see evidence of power-up on it until the SRM console boots. The first time the system boots you will not see the console prompt, P00>>> until you hit carriage return a couple of times. Once at the prompt you'll want to execute the **set console graphics** SRM console command.

The following table shows the switch positions and their function

Keyswitch Position	**Function**
Off	System is powered off and cannot be powered on remotely.
On	System is powered on and **can** be powered on or off remotely.
Secure	System is powered on and **cannot** be powered on or off remotely.

The OCP ID push-wheel is on the front of the OCP panel establishes memory addresses.

See OCP Pushbuttons for a description of their use.

OCP Pushbutton Operation

Button	Name	Function
Left	Scroll down	point to selected item
Middle	Execute	Execute selected item or go to selected menu
Right	Back	go back to previous screen

OCP default view

The OCP normally displays the Alert View. Alerts are messages from the server manager software.

```
Cover 0 (Hot
Plug) i
```

Left – no action
Middle – no action
Right – Back to main menu

OCP Main Menu

You can access all menus from the main menu. Hitting the right button at the alert display brings you to this window. The left button scrolls down to show information beyond the initial display.

```
 T1.0-11875
>Show Box
 Power On
 Power Off
--------------------
 View Alerts
Versions
```

Left – scrolls down to show or select information beyond the initial display.
Middle – Execute selection
Right – Back to top of main menu

OCP Show Drawer

The Show Drawer displays the Ev7s in the 8P or 2P and the state that they are in. The left button scrolls down to show information beyond the initial display.

```
 CAB 0   DRW 0
CMM0 OK
>   EV7-0  Running SRM
```

```
     EV7-1  Running XSROM
 -------------------------------------------
 CMM1 NOT PRESENT
 CMM2 NOT PRESENT
CMM3 NOT PRESENT
```

Left – scrolls down to show information beyond the initial display.
Middle – No action
Right – Back to top of main menu

OCP Power ON/OFF Partition

The left button scrolls down to show information beyond the initial display.

```
 PARTITIONS
 >All Partitions
 Default_HP
```

Left – scrolls down to show or select information beyond the initial display.
Middle – Execute selection
Right – Back to top of main menu

OCP View Alerts

Alerts are meaningful server management messages. These messages are similar to those you see in an MBM> session.

```
Cover 0 (Hot
Plug) i
```

Left – scrolls down to show
Middle – No action
Right – Back to top of main menu

OCP Show Version

Displays the firmware versions of the MBM in that 8P or 2P drawers and the version of the CMM(s) in that 8P or 2P drawers. The display is similar to what would be seen from a **show version** command at the MBM> prompt.

```
 FW VERSIONS
>MBM
    X1.0-11750
CMM0
    X0.0-1555
```

Left – scrolls down to show information beyond the initial display.
Middle – No action
Right – Back to top of main menu

Example: Powering on a Partition

When you walk up to the system, the default display shows the last 4 alert messages.

```
Cover 0 (Hot Plug) I
```

Hitting the RIGHT button get you to the main menu:

```
 T1.0-11875
>Show Box
 Power On
 Power Off
```

Hit the LEFT button to scroll the “>” to select Power On:

```
 T1.0-11875
 Show Box
>Power On
 Power Off
```

Hit the MIDDLE button to execute the Power On selection which brings you to another display:

```
 PARTITIONS
>All Partitions
 Default_HP
```

Hit the MIDDLE button to execute the selection, with brings you to the Are You Sure screen:

```
Are you sure?
>Y
 N
```

Hit the MIDDLE button to confirm that you want to power on all partitions. The screen returns to the main menu:

```
T1.0-11875
 Show Box
>Power On
 Power Off
```

If none of the buttons are pressed for a few seconds, the display automatically returns to the default screen where alerts are displayed. You should see the Power On activity there:

```
 Running Test 10
 Running Test 11
 Running Test 12
Running Test 13
```

Other Possible Menu Commands are:

Reset
Halt in
Halt out

Door Operator Control Panel

Outside

Inside

OCP & Cabinet Status LEDs

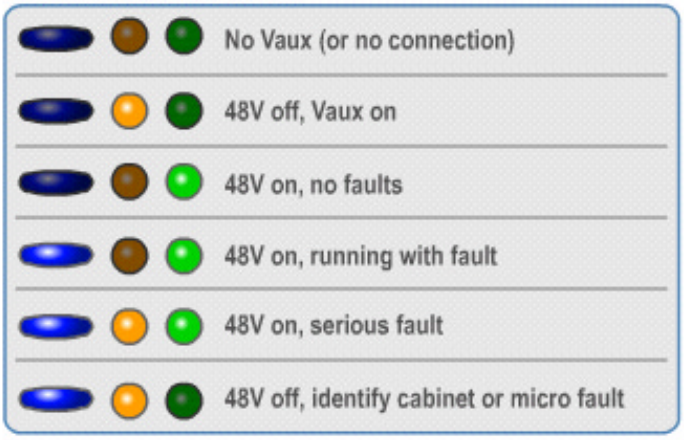

The system can be controlled by the OCP on system cabinet 0. All MBMs and PBMs in a given cabinet listen to the OCP switch. When the state of the switch changes from off to on, the machine responds by executing its power-up routines.

The following table shows the switch positions and their function

Keyswitch Position	**Function**
Off	System is powered off and cannot be powered on remotely.
On	System is powered on and **can** be powered on or off remotely.
Secure	System is powered on and **cannot** be powered on or off remotely.

The OCP ID push-wheel is on the back of the OCP panel along with the network cables which establish the internal LAN.

Though there are no pushbuttons on the door OCP, there are on both the 2P and 8P drawer OCPs. See OCP Pushbuttons for a description of there use.

Refer to the *AlphaServer ES*47/*ES*80/*GS*1280 *Service CD* for a functional descriptions of all OCP functions.

Power-up display

```
                    VxWorks System Boot          This is the operating system running on the micros
Copyright 1984-1998  Wind River Systems, Inc.
CPU: AMD SC520 CDP
Version: 5.4.2
BSP version: 1.2/0
Creation date: Nov  5 2001, 11:17:39
Press any key to stop auto-boot...
 7
 6
 5
 4
 3
 2
 1
 0 auto-booting...
boot device          : flash
unit number          : 0
processor number     : 0
host name            : host
file name            : vxWorks
inet on ethernet (e)    : 10.250.250.250
host inet (h)        : 10.253.0.254
user (u)             : target
flags (f)            : 0xa0
other (o)            : fei
Starting at 0x8400330...
06 07 08 09
Attaching interface lo0...done
Network interface fei0 not found. DHCP server not started.
Adding 5161 symbols for standalone.
            VxWorks
Copyright 1984-1998  Wind River Systems, Inc.
        CPU: AMD SC520 CDP
     VxWorks: 5.4.2
  BSP version: 1.2/0
 Creation date: Mar 18 2002
        WDB: Ready.
Server Management  X1.0-10480 Starting up     Server management firmware starting
Image built on Mar 19 2002 at 16:56:25
-> Running POST ...
0A 0B OC 0D 0E
Cabinet number: 0
Drawer number: 0
Micro type: 0
Node IP address: 10.0.0.1
probeQ: 2aaf94  grpTask[i].RcvQ:2aaf94
probeQ: 2aaf94  grpTask[i].RcvQ:2aaf98
probeQ: 2aaf94  grpTask[i].RcvQ:2aaf9c
probeQ: 2aaf94  grpTask[i].RcvQ:2aafa0
Join - Micro:0100000a
g GROUPID: origadr:100000a incarnation:1
```

```
m SETOFMICROS: cnt:1 {100000a }
Predecessor GROUPID: origadr:0 incarnation:0
Forming groupWaiting for newGroupCreation to be posted
Warning: Required storage hook not installed.
Lease records will not be saved.
Warning: No DHCP server address cache! Later entries will not be saved.
0x1d60178 (mbm_dhcp): dhcps: read 1 entries from addr-pool database.
DHCP server started.
..grp_Monitor_task - Message Received 101
[0100000a] NEWGROUP - from 1fe0a
newid GROUPID: origadr:1fe0a incarnation:a
NewP SETOFMICROS: cnt:3 {100000a 1fe0a 2fe0a }
[0100000a] SendAccept - to 0001fe0a
SendAccept newid GROUPID: origadr:1fe0a incarnation:a
SendAccept prevGID GROUPID: origadr:100000a incarnation:1
SendAccept - newid GROUPID: origadr:1fe0a incarnation:a
SendAccept - MicroSet SETOFMICROS: cnt:3 {100000a 1fe0a 2fe0a }
m->cnt = 3
grp_Monitor_task - Message Received 104
[0100000a] JOIN - from 1fe0a
newid GROUPID: origadr:1fe0a incarnation:a
Predecessor GROUPID: origadr:100000a incarnation:8
memb SETOFMICROS: cnt:3 {100000a 1fe0a 2fe0a }
m->cnt = 3
Join - Micro:0100000a
g GROUPID: origadr:1fe0a incarnation:a
m SETOFMICROS: cnt:3 {100000a 1fe0a 2fe0a }
Predecessor GROUPID: origadr:100000a incarnation:8
........interrupt: GROUP IS STABLE
Welcome - GS1280 Server Manager - X1.0-10480
pco_task started as pco_00
pco_task started as pco_01
pco_task started as pco_02
pco_task started as pco_03
pco_task started as pco_04
Attaching network interface ppp0...
ppp0: ppp 2.1.2 started by 10.0.0.1 ppp0: Connect: ppp0 <--> /tyCo/2 ppp0: sent [LCP ConfReq
id=0x3 <mru 2560> <asyncmap 0x0>]
~DBS-W-(tRootTask) Using the free pool to save environment variables for HP: 1, SP: 255
~DBS-W-(tRootTask) Using the free pool to save environment variables for HP: 1, SP: 0 done.
PPP Connects to the CMMs
ppp0: rcvd [LCP ConfAck id=0x3 <mru 2560> <asyncmap 0x0>]
ppp0: rcvd [LCP ConfReq id=0x0 <mru 2560> <asyncmap 0x0>]
ppp0: sent [LCP ConfAck id=0x0 <mru 2560> <asyncmap 0x0>]
ppp0: sent [IPCP ConfReq id=0x9c <addr 10.0.0.1> <compress VJ 0f 01>]
ppp0: rcvd [IPCP ConfRej id=0x9c <compress VJ 0f 01>]
ppp0: sent [IPCP ConfReq id=0x9d <addr 10.0.0.1>]
ppp0: rcvd [IPCP ConfAck id=0x9d <addr 10.0.0.1>]
ppp0: rcvd [IPCP ConfReq id=0x0 <addr 10.0.1.0>]
ppp0: sent [IPCP ConfAck id=0x0 <addr 10.0.1.0>]
ppp0: local  IP address 10.0.0.1
ppp0: remote IP address 10.0.1.0
ppp0: Setting interface mask to 255.0.0.0
ppp0: found interface fei0 for proxy arp
Attaching network interface ppp1...
ppp1: ppp 2.1.2 started by 10.0.0.1
```

```
ppp1: Connect: ppp1 <--> /tyCo/3
ppp1: sent [LCP ConfReq id=0xf7 <mru 2560> <asyncmap 0x0>]
MBM Init finished at: SAT MAR 26 16:27:30 2050

done.
ppp1: rcvd [LCP ConfAck id=0xf7 <mru 2560> <asyncmap 0x0>]
ppp1: rcvd [LCP ConfReq id=0x0 <mru 2560> <asyncmap 0x0>]
ppp1: sent [LCP ConfAck id=0x0 <mru 2560> <asyncmap 0x0>]
ppp1: sent [IPCP ConfReq id=0xfa <addr 10.0.0.1> <compress VJ 0f 01>]
ppp1: rcvd [IPCP ConfRej id=0xfa <compress VJ 0f 01>]
ppp1: sent [IPCP ConfReq id=0xfb <addr 10.0.0.1>]
ppp1: rcvd [IPCP ConfAck id=0xfb <addr 10.0.0.1>]
ppp1: rcvd [IPCP ConfReq id=0x0 <addr 10.0.2.0>]
ppp1: sent [IPCP ConfAck id=0x0 <addr 10.0.2.0>]
ppp1: local  IP address 10.0.0.1 ppp1: remote IP address 10.0.2.0
ppp1: Setting interface mask to 255.0.0.0
ppp1: found interface fei0 for proxy arp
Attaching network interface ppp2...
ppp2: ppp 2.1.2 started by 10.0.0.1
ppp2: Connect: ppp2 <--> /tyCo/4
ppp2: sent [LCP ConfReq id=0xd5 <mru 2560> <asyncmap 0x0>]

~ENV-W-(envmon) box cover 0 is open done.

ppp2: rcvd [LCP ConfAck id=0xd5 <mru 2560> <asyncmap 0x0>]
ppp2: rcvd [LCP ConfReq id=0x0 <mru 2560> <asyncmap 0x0>]
ppp2: sent [LCP ConfAck id=0x0 <mru 2560> <asyncmap 0x0>]
ppp2: sent [IPCP ConfReq id=0x2f <addr 10.0.0.1> <compress VJ 0f 01>] ppp2: rcvd [IPCP
ConfRej id=0x2f <compress VJ 0f 01>]
ppp2: sent [IPCP ConfReq id=0x30 <addr 10.0.0.1>]
ppp2: rcvd [IPCP ConfAck id=0x30 <addr 10.0.0.1>]
ppp2: rcvd [IPCP ConfReq id=0x0 <addr 10.0.3.0>]
ppp2: sent [IPCP ConfAck id=0x0 <addr 10.0.3.0>]
ppp2: local  IP address 10.0.0.1
ppp2: remote IP address 10.0.3.0
ppp2: Setting interface mask to 255.0.0.0
ppp2: found interface fei0 for proxy arp
Attaching network interface ppp3...
ppp3: ppp 2.1.2 started by 10.0.0.1
ppp3: Connect: ppp3 <--> /tyCo/5
ppp3: sent [LCP ConfReq id=0x36 <mru 2560> <asyncmap 0x0>]
done.
ppp3: rcvd [LCP ConfAck id=0x36 <mru 2560> <asyncmap 0x0>]
ppp3: rcvd [LCP ConfReq id=0x0 <mru 2560> <asyncmap 0x0>]
ppp3: sent [LCP ConfAck id=0x0 <mru 2560> <asyncmap 0x0>]
ppp3: sent [IPCP ConfReq id=0x8d <addr 10.0.0.1> <compress VJ 0f 01>] ppp3: rcvd [IPCP
ConfRej id=0x8d <compress VJ 0f 01>]
ppp3: sent [IPCP ConfReq id=0x8e <addr 10.0.0.1>]
ppp3: rcvd [IPCP ConfAck id=0x8e <addr 10.0.0.1>]
ppp3: rcvd [IPCP ConfReq id=0x0 <addr 10.0.4.0>]
ppp3: sent [IPCP ConfAck id=0x0 <addr 10.0.4.0>]
ppp3: local  IP address 10.0.0.1
ppp3: remote IP address 10.0.4.0
ppp3: Setting interface mask to 255.0.0.0
ppp3: found interface fei0 for proxy arp
```

```
MBM>
MBM> power on                                          Begin Power On
numActive after Reconstruction: 8

      0  1  2  3  4  5  6  7  8  9  A  B  C  D  E  F    CPU grid
0     w  w  w  w.......................................      w = wrap ie routing CPUs
    with cable
    wP P  P  Pw.......................................      P = pass
     |....|....|....|.................................       |  = routing between CPUs
    on dual p mod.
     |....|....|....|.................................
1   wP P  P  Pw.......................................
     w  w  w  w.......................................
    ................................................
2   ................................................
    ................................................
    ................................................
3   ................................................
    ................................................
    ................................................
4   ................................................
    ................................................
    ................................................
5   ................................................
    ................................................
    ................................................
6   ................................................
    ................................................
    ................................................
7   ................................................
    ................................................
    ................................................
8   ................................................
    ................................................
    ................................................
9   ................................................
    ................................................
    ................................................
a   ................................................
    ................................................
    ................................................
b   ................................................
    ................................................
    ................................................
c   ................................................
    ................................................
    ................................................
```

```
d ....................................................................
  ....................................................................
  ....................................................................
e ....................................................................
  ....................................................................
  ....................................................................
f ....................................................................
  ....................................................................
  ....................................................................
   0  1  2  3  4  5  6  7  8  9  A  B  C  D  E  F
```

Running test 10, Initialize RAMBUS ... on 8 EV7s	**Diagnostic Tests**
Running test 11, Initialize Memory ... on 8 EV7s	
Running test 12, Data Pattern March read/write ... on 8 EV7s	
Running test 13, RAID channel Test ... on 0 EV7s	
Running test 14, Single Bit Error ... on 8 EV7s	
Running test 15, Double Bit Error ... on 8 EV7s	
Running test 20, Init IO7 and Start Clocks ... on 2 EV7s	
Running test 21, IO7 Data Path (Scratch CSR) ... on 2 EV7s	
Running test 22, IO Single Bit Error checkers ... on 2 EV7s	
Running test 23, IO Double Bit Error checkers ... on 2 EV7s	
Running test 24, IO Timer Expirations ... on 2 EV7s	
Running test 25, IO up-hose SBE checkers ... on 2 EV7s	
Running test 26, IO up-hose DBE checkers ... on 2 EV7s	
Running test 30, Configure RBOX Routes ... on 8 EV7s	
Running test 31, Clear Errors / Enable Routes ... on 8 EV7s	
Running test 32, Route Test: N S E W ... on 8 EV7s (North)	
Running test 32, Route Test: N S E W ... on 8 EV7s (South)	
Running test 32, Route Test: N S E W ... on 8 EV7s (East)	
Running test 32, Route Test: N S E W ... on 8 EV7s (West)	
Running test 33, Inverse Route Setup ... on 8 EV7s	
Running test 32, Route Test: N S E W ... on 8 EV7s (North)	
Running test 32, Route Test: N S E W ... on 8 EV7s (South)	
Running test 32, Route Test: N S E W ... on 8 EV7s (East)	
Running test 32, Route Test: N S E W ... on 8 EV7s (West)	
Running test 33, Inverse Route Setup ... on 8 EV7s	
Running test 34, Single Bit Error checker ... on 8 EV7s	
Running test 35, Double Bit Error checker ... on 8 EV7s	
Running test 31, Clear Errors / Enable Routes ... on 8 EV7s	
Running test 16, IP Memory Access ... on 8 EV7s	
Running test 40, Local I/O Device Interrupts ... on 8 EV7s	
Running test 41, Local Interval Timer Interrupts ... on 8 EV7s	
Running test 42, Local Interprocess Interrupts ... on 8 EV7s	
Running test 43, Software Alerts ... on 1 EV7s	
Running test 46, Other Local Interrupt Bits ... on 8 EV7s	
HP:1 SP:0 PRIMARY: ns:0 ew:0 10.0.1.1	
Running test 50, Loop on Secondary Routine ... on 7 EV7s	
Error code 0: done	**Console Loads Here**
TFTP server: could not send client file "srmfw"	
Powered On HP:1 SP:255 Free_Pool_1	
Powered On HP:1 SP:0 Default_SP	
Connecting to partition. Use the sequence ^[^[MBM to return.	**Autoconnect**
starting console on CPU 0	**First SRM Output**
initialized idle PCB	

```
initializing semaphores
initializing heap
initial heap 500c0
memory low limit = 354000 heap = 500c0, 3ffc0
initializing driver structures
initializing idle process PID
initializing file system
initializing timer data structures
lowering IPL
CPU 0 speed is 800 MHz
create dead_eater
create poll
create timer
create powerup
00000001 exit status for from_init
entering idle loop
access NVRAM
Get Partition DB
hpcount = 1, spcount = 2, ev7_count = 8, io7_count = 2
hard_partition = 1
IO7-100 (Pass 2) at PID 0
Hose 0 - 33 MHz PCI
Hose 1 - 33 MHz PCI
Hose 2 - 133 MHz PCI-X
Hose 3 - 2X AGP
IO7-100 (Pass 2) at PID 1
Hose 4 - 33 MHz PCI
Hose 5 - 33 MHz PCI
Hose 6 - 66 MHz PCI
Hose 7 - 2X AGP
0 sub-partition 0:   start:00000000 00000000   size:00000000 40000000
PID 0 console memory base: 0, 1 GB
1 sub-partition 0:   start:00000004 00000000   size:00000000 40000000
PID 1 memory: 400000000, 1 GB
2 sub-partition 0:   start:00000008 00000000   size:00000000 40000000
PID 2 memory: 800000000, 1 GB
3 sub-partition 0:   start:0000000c 00000000   size:00000000 40000000
PID 3 memory: c00000000, 1 GB
4 sub-partition 0:   start:00000020 00000000   size:00000000 40000000
PID 4 memory: 2000000000, 1 GB
5 sub-partition 0:   start:00000024 00000000   size:00000000 40000000
PID 5 memory: 2400000000, 1 GB
6 sub-partition 0:   start:00000028 00000000   size:00000000 40000000
PID 6 memory: 2800000000, 1 GB
7 sub-partition 0:   start:0000002c 00000000   size:00000000 40000000
PID 7 memory: 2c00000000, 1 GB
total memory, 8 GB
probe I/O subsystem
probing hose 0, PCI
probing PCI-to-PCI bridge, bus 2
do not use secondary IDE channel on CMD controller
probing PCI-to-PCI bridge, bus 3
bus 2, slot 1 -- dqa -- CMD 649 PCI-IDE
bus 2, slot 2 -- pka -- Adaptec AIC-7892
bus 3, slot 4 -- eia -- DE602-AA
bus 3, slot 5 -- eib -- DE602-AA
```

```
probing hose 1, PCI
probing hose 2, PCI
probing hose 3, PCI
bus 0, slot 5 -- vga -- 3D Labs OXYGEN VX1 AGP
probing hose 4, PCI
probing PCI-to-PCI bridge, bus 2
do not use secondary IDE channel on CMD controller
probing PCI-to-PCI bridge, bus 3
bus 2, slot 1 -- dqb -- CMD 649 PCI-IDE
bus 2, slot 2 -- pkb -- Adaptec AIC-7892
probing hose 5, PCI
probing PCI-to-PCI bridge, bus 2
bus 2, slot 4 -- eic -- DE602-AA
bus 2, slot 5 -- eid -- DE602-AA
probing hose 6, PCI
bus 0, slot 1, function 0 -- pkc -- Adaptec AIC-7899
bus 0, slot 1, function 1 -- pkd -- Adaptec AIC-7899
probing hose 7, PCI
starting drivers
initializing keyboard
*** keyboard wake up error...
initializing keyboard
Starting secondary CPU 1 at address 400030000
Starting secondary CPU 2 at address 800030000
Starting secondary CPU 3 at address c00030000
Starting secondary CPU 4 at address 2000030000
Starting secondary CPU 5 at address 2400030000
Starting secondary CPU 6 at address 2800030000
Starting secondary CPU 7 at address 2c00030000
*** system serial number not set. use set sys_serial_num command.
CPU 0: Server Management Interface failed to respond to command 0901
initializing GCT/FRU at 354000
Initializing dqa dqb eia eib eic eid pka pkb pkc pkd
AlphaServer Console X6.3-2381, built on Mar 26 2002 at 00:24:17
P00>>>
```

Console prompt

Verification Procedure

Q-Vet is used to verify the installation. The following topics are covered here:

- Q-Vet Installation Verification
- Installing Q-Vet
- Running Q-Vet
- Reviewing the results of Q-Vet
- Removing Q-Vet
- Q-Vet Resources

Q-Vet Installation Verification

CAUTION: Misuse of Q-Vet may result in loss of customer data. Customers are not authorized to access, download, or use Q-Vet. Q-Vet is used for system installation verification and during system development by Compaq engineers.

Q-Vet is a Qualification Verifier Exerciser Tool used to exercise systems under development. Run the latest released version of Q-Vet to verify that hardware is installed correctly and is operational. Q-Vet does not verify operating system or layered product configurations.
The latest Q-Vet release, information, Release Notes, and documentation are located at http://chump2.mro.cpqcorp.net/qvet/.
If the system is partitioned, Q-Vet must be installed and run separately on each partition. Since Compaq Analyze is used to view Q-Vet errors, it is useful to install it prior to running Q-Vet.

C*AUTION:*

*Do **not** install the Digital System Verification Software (DECVET) on the system; use Q-Vet instead.*
IVP *Run ONLY IVP scripts on systems that contain customer data or any other devices that must not be **over** written . See the Q-Vet Disk Testing Policy Notice on the Q-Vet Web site for details. All Q-Vet IVP scripts use Read Only and/or File I/O to test hard drives. Floppy and tape drives are always write tested and should have scratch media installed.*
Non-IVP *Q-Vet scripts verify disk operation for some drives with "write enabled" techniques. These are intended for engineering and manufacturing test only.*
*Q-Vet **must** be de-installed upon completion of system verification.*

Swap or Pagefile Space

The system must have adequate swap space (on *Tru64 UNIX*) or pagefile space (on *OpenVMS*) for proper Q-Vet operation. You can set this up either before or after Q-Vet installation.
If during initialization Q-Vet determines that the system does not have enough swap/pagefile space, it will display a message indicating the minimum amount needed.
If you wish to address the swap/pagefile size before running Q-Vet, see the swap/pagefile estimates on the Q-Vet web site.

Installing Q-Vet

Install and run Q-Vet from the SYSTEM account on VMS or the root account on UNIX. Remember to install Q-Vet in each partition.

Tru64 UNIX

1. Make sure that there are no old Q-Vet or DECVET kits on the system by using the following command:
   `setld -i | grep VET`
   Note the names of any listed kits, such as OTKBASExxx etc., and remove the kits using **qvet_uninstall** if possible. Otherwise use the command
   `setld -d kit1_name kit2_name kit3_name`

2. Copy the kit tar file (*QVET_Vxxx.tar*) to your system.
3. Be sure that there is no directory named output. If there is, move to another directory or remove the output directory.
   `rm -r output`
4. Untar the kit with the command
   `tar xvf QVET_Vxxx.tar`
   Note: The case of the file name may be different depending upon how it was stored on the system. Also, you may need to enclose the file name in quotation marks if a semi-colon is used.
5. Install the kit with the command
   `setld -l output`
6. During the install, if you intend to use the GUI you must select the optional GUI subset (QVETXOSFxxx).
7. The Q-Vet installation will size your system for devices and memory. It also runs **qvet_tune**. You should answer '**`y`**' to the questions that are asked about setting parameters. If you do not, Q-Vet will not install and the Q-Vet kit will be deleted.
8. After the installation completes, you should delete the output directory with **`rm -r output.`** You can also delete the kit tar file, **QVET_Vxxx.tar**.
9. You *must* reboot the system before starting Q-Vet.
10. On reboot you can start Q-Vet GUI via **`vet&`** or you can run non GUI (command line) via **`vet -nw.`**

OpenVMS

1. Delete any *QVETAXPxxx.A* or *QVETAXPxxx.EXE* file from the current directory.
2. Copy the self-extracting kit image file (*QVETAXPxxx.EXE*) to the current directory.
3. We recommend but do not required, that you purge the system disk before installing Q-Vet. This will free up space that may be needed for pagefile expansion during the AUTOGEN phase.
   $purge sys$sysdevice:[*...]*.*
4. E**xtract the kit saveset with the command: `$run` QVETAXPxxx`.EXE`** and verify that the kit saveset was extracted by checking for the "Successful decompression" message.
5. Use **`@sys$update:vmsinstal`** for the Q-Vet installation. The installation will size the system for CPUs, IO devices and memory. **If you** *do not* **intend to use the GUI, you can answer `no`** to the question "Do you want to install Q-Vet with the DECwindows Motif interface?" Otherwise choose all the default answers during the Q-Vet installation. Q-Vet installation **will verify**, tune the system, and reboot.
6. After the installation completes you should delete the *QVETAXP0xx.A* file and the *QVETAXPxxx.EXE* file.
7. On reboot you can start Q-Vet GUI via **$**vet **or the command interface via $vet/int=char**.

Running Q-Vet

Run Q-Vet on each partition in the system.

We recommend that you review the Special Notices and the Testing Notes section of the Release Notes located at http://chump2.mro.cpqcorp.net/qvet/ before running Q-Vet.
Follow the instructions listed for your operating system to run Q-Vet in each partition.

Tru64 UNIX

Graphical Interface	1. From the Main Menu, select **IVP**, **Load Script** and select **Long IVP** (the IVP tests will then load into the Q-Vet process window). Click the **Start All** button to begin IVP testing.

Command-Line Interface	`> vet -nw`
	`Q-Vet_setup> execute .Ivp.scp`
	`Q-Vet_setup> start`
	
	Note that there is a "**.**" in front of the script name, and that commands are case sensitive.

OpenVMS

Graphical Interface	1. From the Main Menu, select **IVP**, **Load Script** and select **Long IVP** (the IVP tests will then load into the Q-Vet process window). Click the **Start All** button to begin IVP testing.

Command-Line Interface	`$ vet /int=char`
	`Q-Vet_setup> execute ivp.vms`
	`Q-Vet_setup> start`
	
	Note that commands are case sensitive.

NOTE: A short IVP script is provided for a simple verification of device setup. To run the short script, select the appropriate file, **.Ivp_short.scp or ivp_short.vms** from the GUI IVP menu. This script will run for 15 minutes and then terminate with a summary log. The short script may be run as a preliminary to but not in place of the long IVP script, which is the full IVP test.

The long IVP will run a "cycle of testing", i.e. until the slowest device has completed one pass of all tests (typically 4 or 5 hours).

Optionally, you can increase the IVP long run time by increasing the **cyclecount** (3 passes are recommended). Two of the ways to do this are described. If you wish to know more about Q-Vet features like this, see the training course at http://learning1.americas.cpqcorp.net/wbt/cs127a-ewb/welcome.htm.

- After executing (loading) the IVP long script, issue the Q-Vet command **set cyclecount** x, where x is the number of cycles desired.
- If you have the GUI, simply of to the menu item Options >Cyclecount and change the setting.

Reviewing Results of the Q-Vet Run

After running Q-Vet, check the results by reviewing the summary log.

Q-Vet will run all exercisers until the slowest device has completed one full pass. Depending on the size of the system, this will typically take 2 to 12 hours. Q-Vet will then terminate testing and produce a summary log. The termination message will tell you the name and location of this file.

All exerciser processes can also be manually terminated with the Suspend and Terminate buttons (**stop** and **terminate** commands).

After all exercisers report "Idle," the summary log is produced containing Q-Vet specific results and statuses.

A. If there are no Q-Vet errors, no system error events, and testing ran to specified completion, the following message will be displayed:

```
Q-Vet Tests Complete: Passed
```

B. Otherwise, a message will indicate:

```
Q-Vet Tests Complete: Fail
```

Run Compaq Analyze to review test results. The IVP scripts do not translate events unless they are Q-Vet detected errors. The testing times (for use with Compaq Analyze) are printed to the Q-Vet run window and are available in the summary log.

De-Installing Q-Vet

De-installation of Q-Vet differ between operating systems. And you must de-install Q-Vet from each partition in the system. Failure to do so may result in the loss of customer data at a later date if Q-Vet is misused.

Follow the instructions listed under your operating system to de-install Q-Vet from a partition. The **qvet_uninstall** programs will remove the Q-Vet supplied tools and restore the original system tuning/configuration settings.

Tru64 UNIX

1. Command Q-Vet to **Stop, Terminate, and Exit.**
2. Execute the command **`qvet_uninstall`** which will remove Q-Vet and restore the system configuration/tuning file **`sysconfigtab`**.
3. Note: log files are retained in **`/usr/field/tool_logs`**
4. Reboot the system. (You must reboot, even if you decide to reinstall Q-Vet. If you do not reboot tuning configurations may not be set properly.)

OpenVMS

1. Command Q-Vet to **Stop, Terminate, and Exit.**
2. Execute the command **@sys$manager:qvet_uninstall.** This will remove Q-Vet and restore system tuning (**modparams.dat**) and the original **UAF** settings.
3. Note: log files are retained in **sys$specific:[sysmgr.tool_logs]**
4. Reboot the system. (You must reboot even if you decide to reinstall Q-Vet. If you do not reboot tuning configurations may not be set properly.)

Q-Vet Resources

- Release notes and kits are available from the Q-Vet web page:
  http://chump2.mro.cpqcorp.net/qvet/
- Training may be found at:
  http://learning1.americas.cpqcorp.net/wbt/cs127a-ewb/welcome.htm
- A description of the IVP may be found at:
  http://chump2.mro.cpqcorp.net/qvet/IVP_description.html