hp AlphaServer

GS1280 Upgrades

Order Number: EK-GS128-UP. C01

This manual is for field service engineers and self-maintenance customers making model upgrades to *hp AlphaServer* GS1280 systems.

Hewlett-Packard Company

November 2003

© 2003 Hewlett-Packard Company.

Linux is a registered trademark of Linus Torvalds in several countries. UNIX is a trademark of The Open Group in the United States and other countries. All other product names mentioned herein may be trademarks of their respective companies.

HP shall not be liable for technical or editorial errors or omissions contained herein. The information in this document is provided “as is” without warranty of any kind and is subject to change without notice. The warranties for HP products are set forth in the express limited warranty statements accompanying such products. Nothing herein should be construed as constituting an additional warranty.

FCC Notice

This equipment generates, uses, and may emit radio frequency energy. The equipment has been type tested and found to comply with the limits for a Class A digital device pursuant to Part 15 of FCC rules, which are designed to provide reasonable protection against such radio frequency interference.

Operation of this equipment in a residential area may cause interference in which case the user at his own expense will be required to take whatever measures may be required to correct the interference.

Any modifications to this device—unless expressly approved by the manufacturer—can void the user’s authority to operate this equipment under part 15 of the FCC rules.

Modifications

The FCC requires the user to be notified that any changes or modifications made to this device that are not expressly approved by Hewlett-Packard Company may void the user's authority to operate the equipment.

Cables

Connections to this device must be made with shielded cables with metallic RFI/EMI connector hoods in order to maintain compliance with FCC Rules and Regulations.

Taiwanese Notice

警告使用者:

這是甲類的資訊產品，在居住的環境中使用時，可能會造成射頻干擾，在這種情況下，使用者會被要求採取某些適當的對策。

Japanese Notice

この装置は，情報処理等電波障害自主規制協議会（VCCI）基準に基づくクラス A 情報装置です。この装置を家庭環境で使用すると電波障害を引き起こすことがあります。この場合には，使用者が適切な対策を講じるよう要求されることがあります。

Canadian Notice

This Class A digital apparatus meets all requirements of the Canadian Interference-Causing Equipment Regulations.

Avis Canadien

Cet appareil numérique de la classe A respecte toutes les exigences du Règlement sur le matériel brouilleur du Canada.

European Union Notice

Products with the CE Marking comply with both the EMC Directive (89/336/EEC) and the Low Voltage Directive (73/23/EEC) issued by the Commission of the European Community.

Compliance with these directives implies conformity to the following European Norms (in brackets are the equivalent international standards):

EN55022 (CISPR 22) - Electromagnetic Interference

EN50082-1 (IEC801-2, IEC801-3, IEC801-4) - Electromagnetic Immunity

EN60950 (IEC950) - Product Safety

Warning!

This is a Class A product. In a domestic environment this product may cause radio interference in which case the user may be required to take adequate measures.

Achtung!

Dieses ist ein Gerät der Funkstörgrenzwertklasse A. In Wohnbereichen können bei Betrieb dieses Gerätes Rundfunkstörungen auftreten, in welchen Fällen der Benutzer für entsprechende Gegenmaßnahmen verantwortlich ist.

Attention!

Ceci est un produit de Classe A. Dans un environnement domestique, ce produit risque de créer des interférences radioélectriques, il appartiendra alors à l'utilisateur de prendre les mesures spécifiques appropriées.

Contents

Chapter 1 Before You Begin

1.1 Torque Requirements 1–2
1.2 Ground Rail Location 1–3
1.3 Rail Hole Numbering 1–4
1.4 Cage Nuts 1–5

Chapter 2 In-Cabinet Model 8 to Model 16 Upgrade

2.1 Check the Upgrade Kit 2–2
2.2 Power Down the System 2–5
2.3 Remove Devices Above the 8P Drawer 2–6
2.3.1 Storage Shelf Removal 2–8
2.3.1.1 Remove the Shelf 2–8
2.3.1.2 Remove the Rails 2–8
2.3.2 I/O Drawer Removal 2–10
2.3.2.1 Remove the I/O Drawer 2–10
2.3.2.2 Remove the Slide Rails 2–12
2.4 Install the I/O Drawer at the Top of the Cabinet 2–14
2.4.1 Prepare for Installation 2–14
2.4.2 Install the Slides 2–16
2.4.3 Install the I/O Drawer 2–18
2.5 Install the Second Power Distribution Unit 2–20
2.6 Install the Power Subrack 2–21
2.6.1 Install the Subrack 2–21
2.6.2 Install the Power Supplies 2–23
2.6.3 Install the Power Interface Assembly 2–24
2.7 Install the 8P Drawer 2–25
2.7.1 Install the Slide Brackets 2–25
2.7.2 Install the Slides 2–28
2.7.3 Install the Drawer 2–34
2.7.4 Install the 48V Power Harness 2–40
2.7.4.1 Install the Cable Management Bracket 2–40
2.7.4.2 Install the 48V Power Harness 2–42
2.7.5 Remove Two Loopback Modules from Drawer 0 2–44

2.7.6 Install a Loopback Module on Drawer 1 2–45
2.7.7 Install the Interprocessor Cables 2–46
2.7.8 Install the I/O Cables 2–48
2.7.9 Install the Memory Modules 2–52
2.7.10 Install the CPU Modules 2–54
2.8 Connect Cables 2–56
2.8.1 OCP Cables 2–56
2.8.2 Wiring Diagram 2–57
2.9 Set the ID Switches 2–58
2.10 Check Firmware Revisions 2–59
2.11 Verify the System 2–59

Chapter 3 Side-by-Side Model 8 to Model 16 Upgrade

3.1 Upgrade Kit 3–2
3.2 Join the System Cabinets 3–3
3.3 Remove Loopback Modules 3–6
3.4 Install the Interprocessor Cables 3–8
3.5 Connect the NAT Boxes 3–10
3.6 Set the ID Switches 3–12
3.7 Reconfigure and Verify the System 3–14

Chapter 4 Side-by-Side Model 16 to Model 32 Upgrade

4.1 Upgrade Kit 4–2
4.2 Join the System Cabinets 4–3
4.3 Remove Loopback Modules 4–6
4.4 Install the Interprocessor Cables 4–8
4.5 Connect the NAT Boxes 4–10
4.6 Set the ID Switches 4–12
4.7 Reconfigure and Verify the System 4–14

Chapter 5 Side-by-Side Model 32 to Model 64 Upgrade

5.1 Upgrade Kit 5–2
5.2 Join the System Cabinets 5–3
5.3 Install the Interprocessor Cables 5–6
5.4 Connect the NAT Boxes 5–8
5.5 Set the ID Switches 5–10
5.6 Reconfigure and Verify the System 5–12

Chapter 6 Verification Procedure

6.1 Q-Vet Installation Verification 6–2

6.2 Installing Q-Vet 6–3
6.2.1 Tru64 UNIX 6–3
6.2.2 OpenVMS 6–4
6.3 Running Q-Vet 6–4
6.3.1 Tru64 UNIX 6–5
6.3.2 OpenVMS 6–5
6.4 Reviewing Results of the Q-Vet Run 6–6
6.5 De-Installing Q-Vet 6–7
6.5.1 Tru64 UNIX 6–7
6.5.2 OpenVMS 6–7
6.6 Q-Vet Resources 6–7

Figures

1–1 Ground Rail Location 1–3
1–2 Rail Hole Numbering 1–4
1–3 Cage Nut Installation 1–5
2–1 Main Circuit Breaker 2–5
2–2 Model 8 and Model 16 Cabinets 2–7
2–3 Removing the Storage Shelf 2–9
2–4 Removing the I/O Drawer 2–11
2–5 I/O Drawer Slide Rails 2–13
2–6 Cable Support Assembly 2–14
2–7 Cage Nuts for I/O Drawer Installation 2–15
2–8 Cable Deflector 2–15
2–9 Installing the I/O Drawer Slides 2–17
2–10 Aligning the I/O Drawer and Rail Slides 2–18
2–11 Installing the I/O Drawer 2–19
2–12 Location of Power Distribution Unit 2–20
2–13 Cage Nuts for Power Subrack Installation 2–21
2–14 Installing the Power Subrack 2–22
2–15 Installing the Power Supplies 2–23
2–16 Installing the Power Interface Assembly 2–24
2–17 Cage Nuts for 8P Drawer 1 Installation 2–25
2–18 Installing Brackets for 8P Drawer Slides 2–27
2–19 Installing the 8P Drawer Slide—Right Side 2–29
2–20 Installing the 8P Drawer Slide—Left Side 2–31
2–21 Installing the Slide Support Brackets 2–33
2–22 Installing the 8P Drawer Plate 2–35
2–23 Installing the Vertical Support and Tie Bracket 2–37
2–24 Installing Rear Brackets and Ground Strap 2–39
2–25 Cage Nuts for 8P Power Harness Bracket 2–40
2–26 Installing the 8P Power Harness Bracket 2–41

2–27 Installing the 8P Power Harness 2–43
2–28 Cable Holder 2–43
2–29 Removing Loopback Modules 2–44
2–30 Installing a Loopback Module 2–45
2–31 Interprocessor Cable Connectors 2–46
2–32 Interprocessor Cables 2–47
2–33 Installing the Skid Plate and I/O Cable Bracket 2–49
2–34 Cage Nuts for I/O Cable Bracket 2–50
2–35 I/O Cables 2–51
2–36 Installing a Memory Module 2–53
2–37 Module Slot Numbering 2–55
2–38 OCP Cable Connectors 2–56
2–39 Wiring Diagram 2–57
2–40 Device ID Switches 2–58
3–1 Removing the Cabinet Side Panels 3–4
3–2 Joining the System Cabinets 3–5
3–3 Attaching the Ground Wire 3–5
3–4 Removing Loopback Modules 3–7
3–5 Interprocessor Cable Routing 3–8
3–6 Interprocessor Cable Connectors 3–9
3–7 Connecting the NAT Boxes 3–11
3–8 System Cabinet ID Switch 3–12
3–9 Device ID Switches 3–13
4–1 Removing the Cabinet Side Panels 4–4
4–2 Joining the System Cabinets 4–5
4–3 Attaching the Ground Wire 4–5
4–4 Removing Loopback Modules 4–6
4–5 Interprocessor Cable Connectors 4–7
4–6 Interprocessor Cable Routing 4–9
4–7 Connecting the NAT Boxes 4–11
4–8 System Cabinet ID Switch 4–12
4–9 Device ID Switches 4–13
5–1 Removing the Cabinet Side Panels 5–4
5–2 Joining the System Cabinets 5–5
5–3 Attaching the Ground Wire 5–5
5–4 Interprocessor Cable Routing 5–7
5–5 Connecting the NAT Boxes 5–9
5–6 System Cabinet ID Switch 5–10
5–7 Device ID Switches 5–11

Tables

1 hp AlphaServer GS1280 Documentation x
1–1 Torque Requirements 1–2
2–1 Model 8 to Model 16 Upgrade Kit 2–2
2–2 Brackets for 8P Drawer Slides 2–26
2–3 Interprocessor Cable Weaving 2–47
2–4 CPU and Filler Module Placement 2–54
2–5 OCP Cables 2–56
3–1 Side-by-Side Model 8 to Model 16 Upgrade Kit 3–2
3–2 Interprocessor Cable Routing 3–9
4–1 Side-by-Side Model 16 to Model 32 Upgrade Kit 4–2
4–2 Interprocessor Cable Routing 4–8
5–1 Side-by-Side Model 32 to Model 64 Upgrade Kit 5–2
5–2 Interprocessor Cable Routing 5–7

Preface

Intended Audience

This manual is for service providers who are upgrading an hp AlphaServer GS1280 Model 8 system to a Model 16, a Model 16 system to a Model 32, or a Model 32 system to a Model 64.

Document Structure

This manual has five chapters.

- **Chapter 1, Before You Begin**, has information about hardware installation.
- **Chapter 2, Model 8 to Model 16 Upgrade**, contains the procedure for installing a second 8P drawer in a GS1280 cabinet.
- **Chapter 3, Side-by-Side Model 8 to Model 16 Upgrade**, is the procedure for adding a second cabinet with one 8P drawer to a GS1280 system with one 8P drawer.
- **Chapter 4, Side-by-Side Model 16 to Model 32 Upgrade**, has the procedure for upgrading a system with two 8P drawers in one cabinet. The upgrade adds a second cabinet with two 8P drawers.
- **Chapter 5, Side-by-Side Model 32 to Model 64 Upgrade**, has the procedure for upgrading a system with four 8P drawers in one cabinet. The upgrade adds a second cabinet with four 8P drawers.
- **Chapter 6, Verification Procedure,** gives you the procedures for installing, running, and removing Q-Vet to verify the system upgrade.

Information on the Internet

Visit the *AlphaServer* Web site from the internal HP page for PDF and HTML versions of AlphaServer documentation. This site is updated as new revisions and manuals are produced. Table 1 lists some of the available documentation.

Firmware downloads are available at
ftp://ftp.digital.com/pub/Digital/Alpha/firmware/index.html.

You can reach this from the external HP homepage.

Table 1 hp AlphaServer GS1280 Documentation

Title	Pages	Size (MB)	PDF	HTML
hp AlphaServer ES47/ES80/GS1280				
Site Preparation	48	1.02	Y	Y
Installation Information	101	6.76	Y	Y
User Information	105	3.40	Y	Y
Server Management Tutorial	–	–	N	Y
Service Manual	525	6.9	Y	Y
AlphaServer Management Station Software Installation and User's Guide	97	2.51	Y	Y
CLI Reference	117	0.30	Y	Y
SRM Console Reference	71	0.25	Y	Y
Technical Summary	26	0.82	Y	Y

Chapter 1
Before You Begin

This chapter contains important information that you need before you begin the upgrade procedure. Please read it before proceeding.

Sections in this chapter are:

- Torque Requirements
- Ground Rail Location
- Rail Hole Numbering
- Cage Nuts

1.1 Torque Requirements

Torque all fasteners as specified in Table 1–1.

Table 1–1 Torque Requirements

Fastener	Phillips Head Screw	Hex Bolt	Torque		Tolerance
			IN-LBS	N-M	
M8	#3	13 mm	147	16.7	+/– 10%
M6	#3	10 mm	60	6.9	+/– 10%
M5	#2	–	37.5	4.0	+/– 10%
M4	#2	–	17.5	2.0	+/– 20%
M3.5	#1	–	11.9	1.4	+/– 20%

1.2 Ground Rail Location

Reference is made throughout this manual to the ground rail. It is the right rear rail, as shown in Figure 1–1.

Figure 1–1 Ground Rail Location

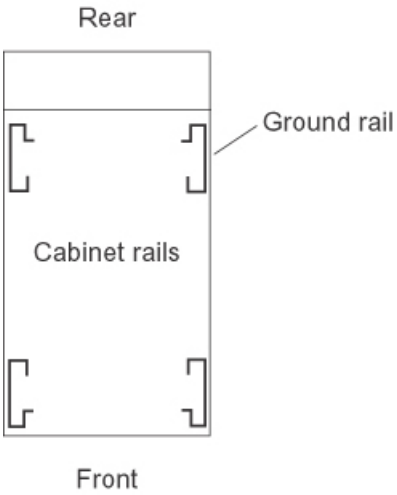

1.3 Rail Hole Numbering

Procedures throughout this manual refer to rail holes. Hole numbers are labeled on the rails and are counted from the base of the cabinet.

Figure 1–2 Rail Hole Numbering

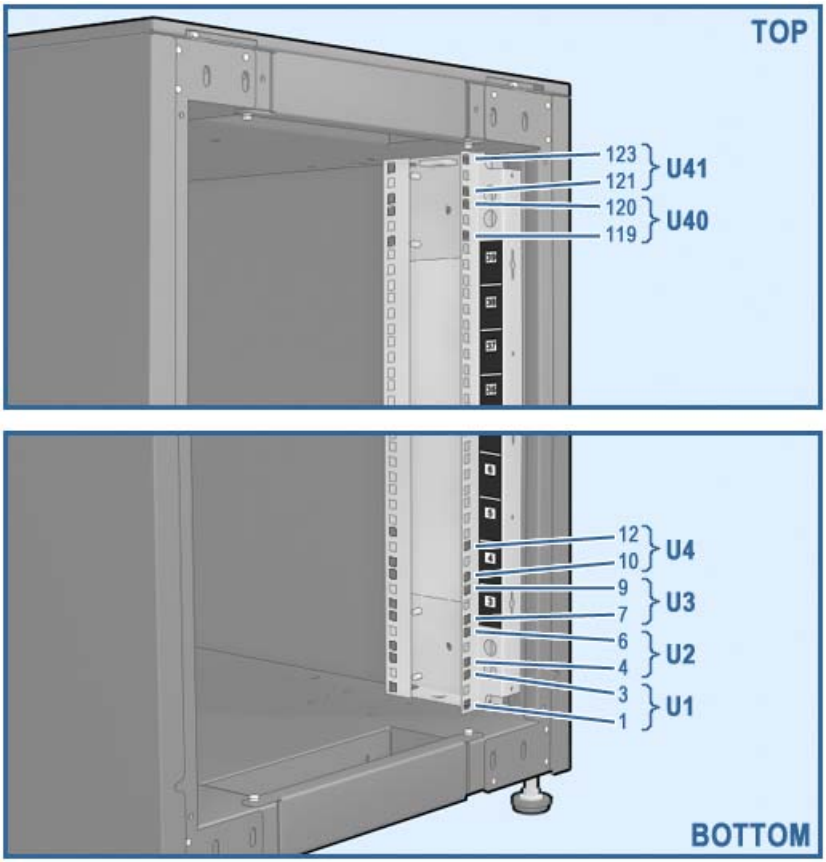

1.4 Cage Nuts

Cage nuts are installed in rail holes and on brackets as shown in Figure 1–3. They can be oriented in either direction.

Figure 1–3 Cage Nut Installation

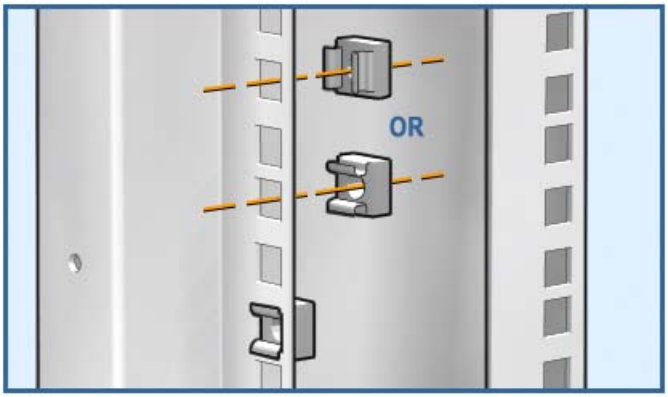

Chapter 2
In-Cabinet Model 8 to Model 16 Upgrade

NOTE: This procedure requires two people and takes approximately eight hours.

This chapter contains the procedure for installing a second 8P drawer and other necessary hardware in a GS1280 cabinet. Sections in this chapter are:

- Check the Upgrade Kit
- Power Down the System
- Remove Devices Above the 8P Drawer
- Install the I/O Drawer at the Top of the Cabinet
- Install the Second Power Distribution Unit
- Install the Power Subrack
- Install the 8P Drawer
- Connect Cables
- Set the ID Switches
- Check Firmware Revisions
- Verify the System

For information about upgrading CPU modules, see *ES47/ES80/GS1280 CPU Upgrade* (EK–EGCPU–UP).

For information about upgrading memory modules, see *ES47/ES80/GS1280 Memory Upgrade* (EK–EGMEM–UP).

If the system uses the dual AC option, see *GS1280 Dual Power Option Upgrade* (EK–128DP–UP).

2.1 Check the Upgrade Kit

The part number for the in-cabinet Model 8 to Model 16 upgrade kit is 3X–BA65B–AA. Its contents are listed in Table 2–1.

NOTE: In addition to the upgrade kit, a second power distribution unit is required. This item is ordered separately. An additional AC junction box is also required. This item is supplied by the customer.

CPU and memory modules are ordered separately.

An additional cabinet may be required to hold devices that are removed from the system cabinet in this upgrade.

Table 2–1 Model 8 to Model 16 Upgrade Kit

Quantity	Part Number	Description
1	3X–BA65A–AA	8P drawer with 4 filler modules (54–30256–01) installed
1	3X–H7513–BA	Power subrack
3	30–56638–01	Power supply
4	17–05019–01	Interprocessor cable
1	CK–BA65A–DA	Mounting kit
Mounting kit consists of:		
2	12–10038–01	Slide
1	128557–001	Screw, 5.5mm x 12mm, self-tapping
1	70–40876–01	Frame assembly
1	70–41053–01	Cable support assembly, rear
1	70–41159–01	Pivot arm weldment
1	70–41161–01	Bracket, shipping, cable
1	70–41163–01	Retractor assembly

Table 2–1 Model 8 to Model 16 Upgrade Kit (Continued)

Quantity	Part Number	Description
1	74–60656–01	Bracket, cable deflector (skid plate)
1	74–61927–01	Bracket- mounting right-side
1	74–61929–01	Front support bracket
1	74–61934–01	Bracket, mounting
1	74–61935–01	Front left slide bracket
1	74–61936–01	Rear left slide bracket
1	74–61937–01	Front right slide bracket
1	74–61938–01	Rear right slide bracket
1	74–61940–01	Support, bar slide
1	74–61942–01	Rear support bracket
1	74–61943–01	Bracket, vertical support
1	74–61944–01	Bracket, tie
2	74–61945–01	Bracket, mounting
1	74–61982–01	Plate, front no-lock
1	74–62074–01	Bracket, left–side
1	74–62075–01	Bracket, angle left support
1	74–62333–01	Bracket, pivot support
2	74–62408–01	Bracket, angle diecast
2	74–62409–01	Bracket, support extrusion
4	90–00063–39	Screw, 10-32 x .5
2	90–09984–18	Screw, sems M5 x 0.8 x 12mm
4	90–09984–23	Screw, sems M5 pan 8mm
9	90–10754–04	Nut, hex M8
35	90–11476–01	Cage nut

Table 2–1 Model 8 to Model 16 Upgrade Kit (Continued)

Quantity	Part Number	Description
2	90–11592–02	Roll pin, 5/16 dia x 1.00 long
50	90–40219–02	Screw, M6, 16mm
8	90–40219–03	Screw, M6, 10mm
12	90–40219–04	Screw, M6, 20mm
4	90–40346–01	Nut, hex, metric, M4,
47	90–40389–01	Washer, flat, plain, 8.4mm
47	90–40390–01	Washer, lock, external tooth
3	90–40391–01	Screw, M8, hex, 12mm
19	90–40391–02	Screw, M8, hex, 25mm
6	90–40391–03	Screw, M8, hex, 35mm
2	90–40391–04	Screw, M8, hex, 50mm
15	90–40391–06	Screw, M8, hex, 15mm

2.2 Power Down the System

1. Shut down the operating system.
2. Issue the power off command from the MBM prompt:

   MBM> power off

   If the system is partitioned, issue the command:

   MBM> power off -all
3. Shut off the main circuit breaker on the front of the power distribution unit. See Figure 2–1.
4. Disconnect the main power cord from the power source.

Figure 2–1 Main Circuit Breaker

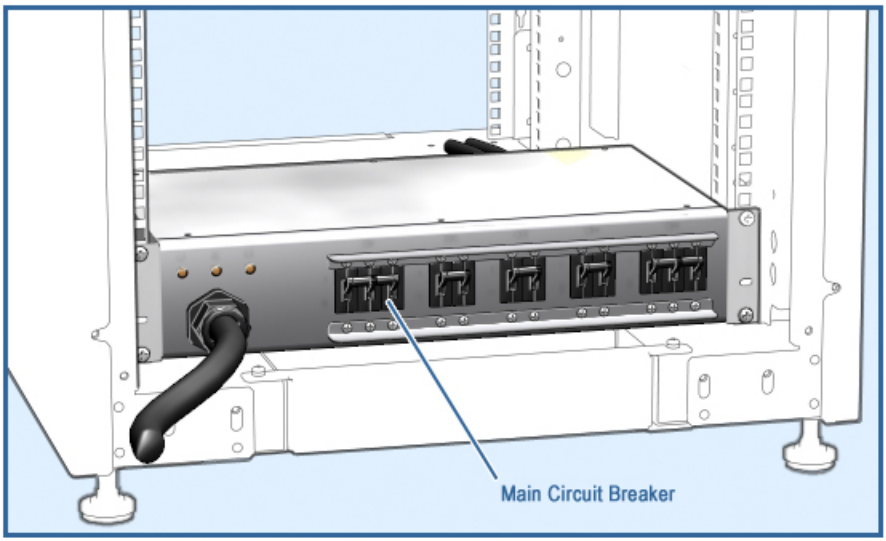

2.3 Remove Devices Above the 8P Drawer

The area from U23 to U32 must be clear before you can begin this upgrade. If this area is clear, skip to Section 2.4.1 and perform step 2, and then go to Section 2.5.

If there are any I/O drawers or storage shelves in this part of the cabinet, remove them to make room for the second 8P drawer. (See Sections 2.3.1 and 2.3.2 for instructions.)

Figure 2–2 shows the cabinet before the upgrade (with an I/O drawer in the area that must be cleared) and after the upgrade.

Figure 2–2 Model 8 and Model 16 Cabinets

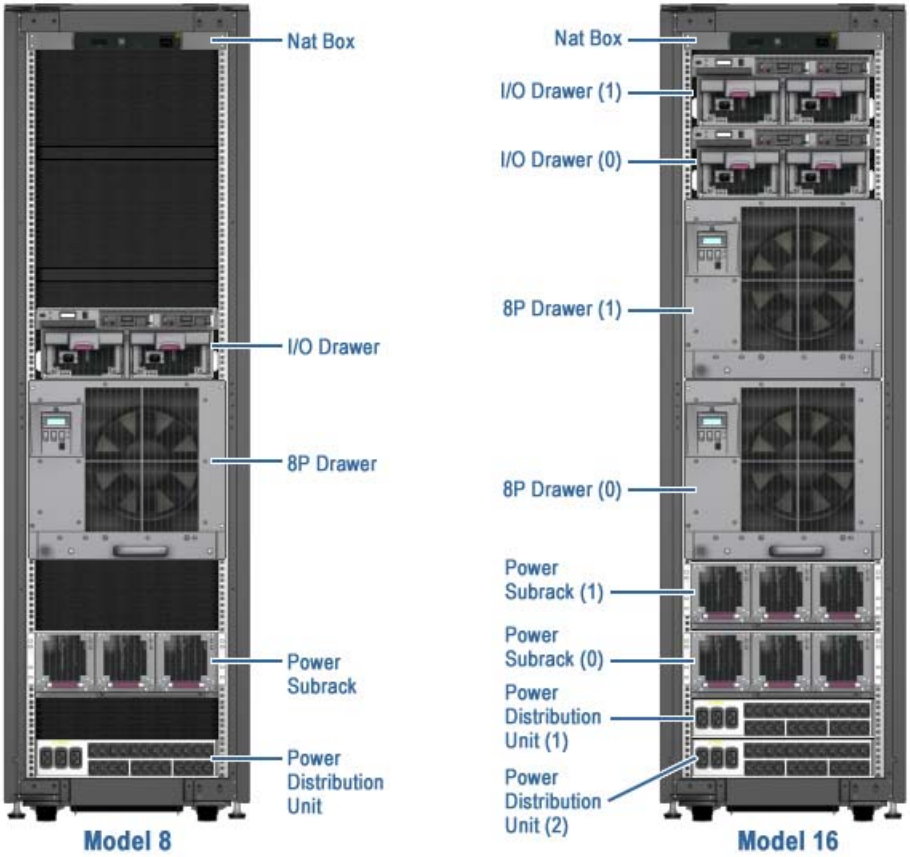

2.3.1 Storage Shelf Removal

Remove any storage shelf between U23 and U32. It might be necessary to move the device to another cabinet.

Tools required: 5/16 socket.

2.3.1.1 Remove the Shelf

1. At the rear of the cabinet disconnect the two interface and two power cables. Unplug the interface cables from the I/O drawer and the power cables from the PDU. Label these cables and remove them from the cable management bracket.
2. At the front of the cabinet, loosen the four captive screws and slide the shelf from the cabinet.

2.3.1.2 Remove the Rails

1. At the front of the cabinet remove the two screws at the end of each rail. Remove the screw on the side of each rail near the front. Save all hardware.
2. At the rear of the cabinet remove the two square nuts and washers at the end of each rail. Remove the screw on the side of each rail near the rear. Take the rails out of the cabinet and set them aside.
3. Remove the rail brackets by removing the screw from each with a 5/16 socket and set them aside.

Figure 2–3 Removing the Storage Shelf

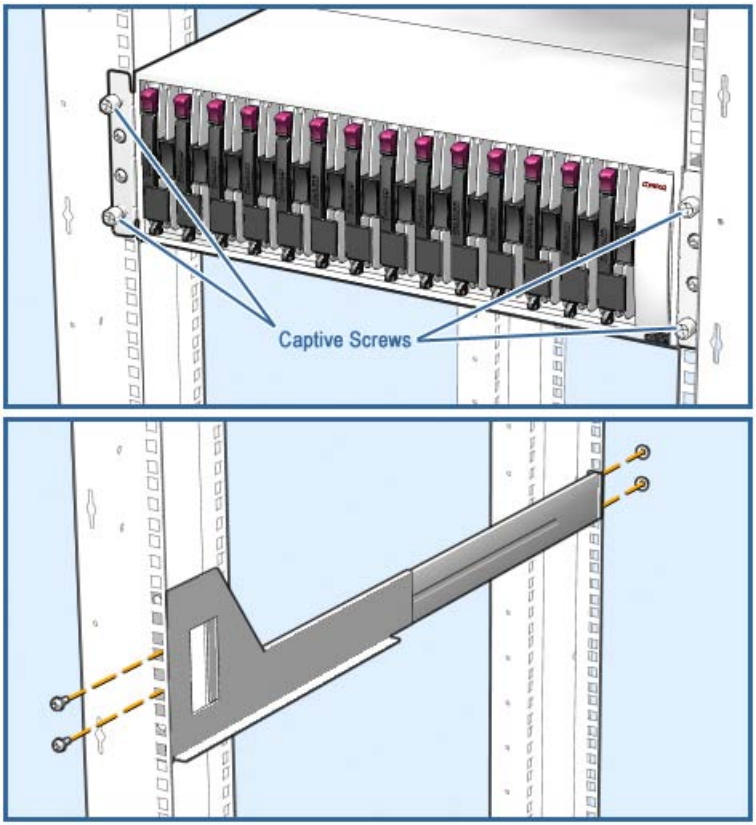

2.3.2 I/O Drawer Removal

Remove any I/O drawer between U23 and U32. If space permits, the drawer is reinstalled in Section 2.4.

2.3.2.1 Remove the I/O Drawer

1. From the front of the cabinet, unplug the power cords (see Figure 2–4).
2. Remove the power supplies. Press the button on each handle and push the handle down. Slide each power supply out of the I/O drawer.
3. From the rear of the cabinet, disconnect all cables connected to devices in the I/O drawer. Label these cables.
4. Release the two rail latches at the rear of the drawer that hold it in place and pull the drawer out until it locks.
5. Disconnect the ground strap from the right rear cabinet rail. Save the self-tapping screw.
6. Release the mounting rail locks and slide the I/O drawer out the rear of the cabinet.

Figure 2–4 Removing the I/O Drawer

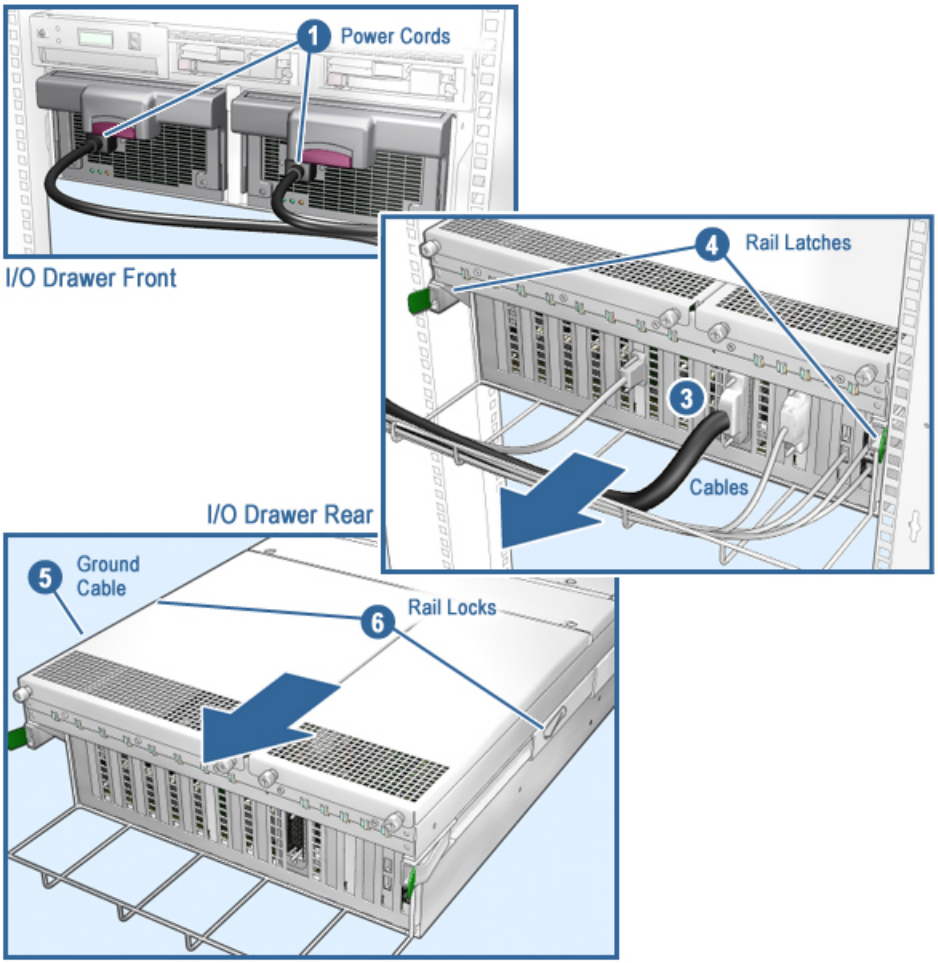

2.3.2.2 Remove the Slide Rails

1. From the rear of the cabinet, remove the two screws from the end of each rail (see Figure 2–5). Save all hardware.
2. From the front of the cabinet, remove the two screws from the end of each rail. Set the slide rails aside.
3. Remove the cable deflector from the right front rail by removing the two screws. Set the cable deflector aside.
4. Remove and save all cage nuts.

Figure 2–5 I/O Drawer Slide Rails

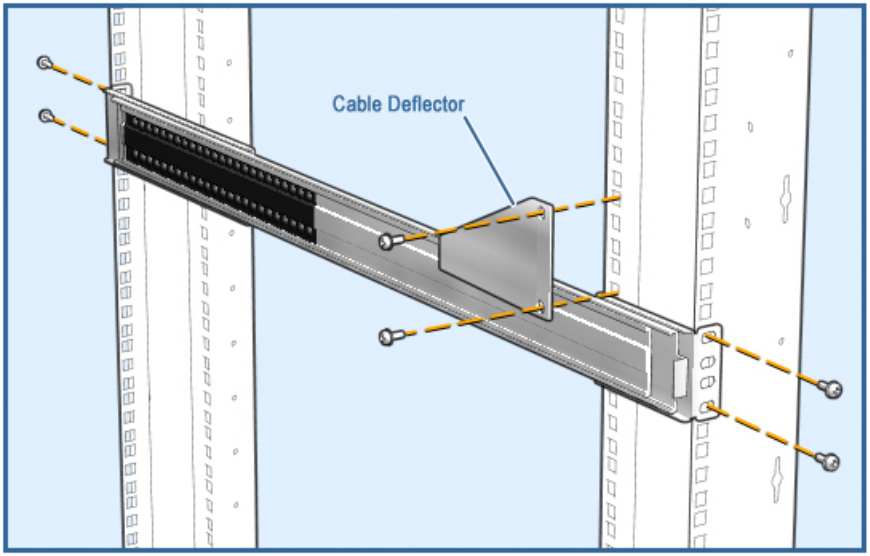

2.4 Install the I/O Drawer at the Top of the Cabinet

2.4.1 Prepare for Installation

1. If the cable support assembly at the top rear of the cabinet has slots in the end tabs, push the assembly up and out of the way. If it has holes instead of slots, remove the cable support assembly. See Figure 2–6. Set it aside to replace after the I/O drawer is installed.

Figure 2–6 Cable Support Assembly

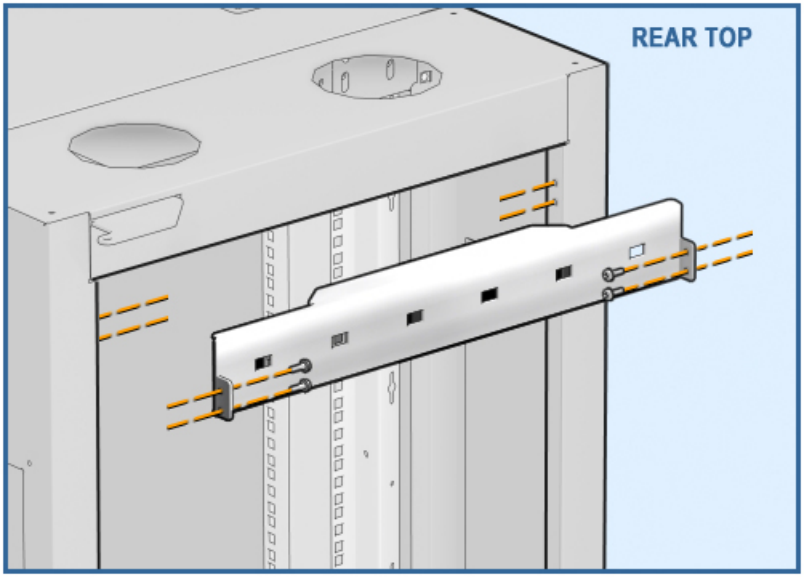

2. Run the server management cable (17–03511–01), which will connect the MBM to the OCP, along the NAT mounting bracket and attach it to the bracket with cable ties. Leave the ends free to be connected later.
3. Install cage nuts as shown in Figure 2–7. The illustration shows the section of the rail and the holes in which to install the cage nuts.
4. Attach the cable deflector to holes 117 and 113 of the right front rail (see Figure 2–8).

Figure 2–7 Cage Nuts for I/O Drawer Installation

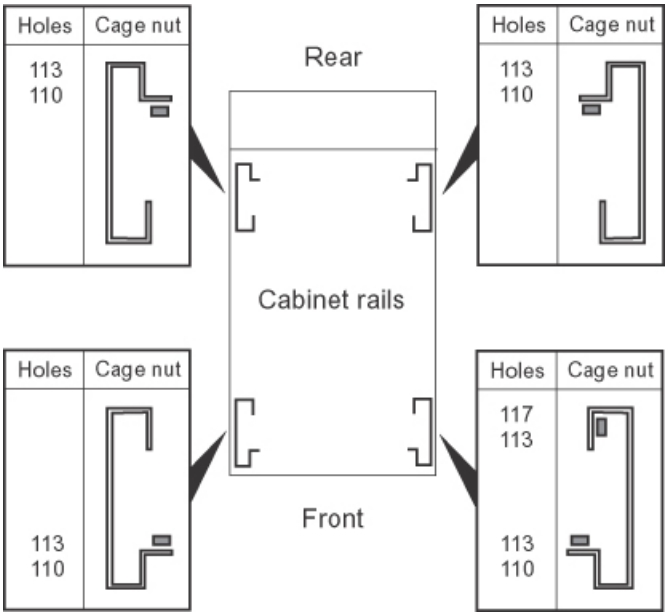

Figure 2–8 Cable Deflector

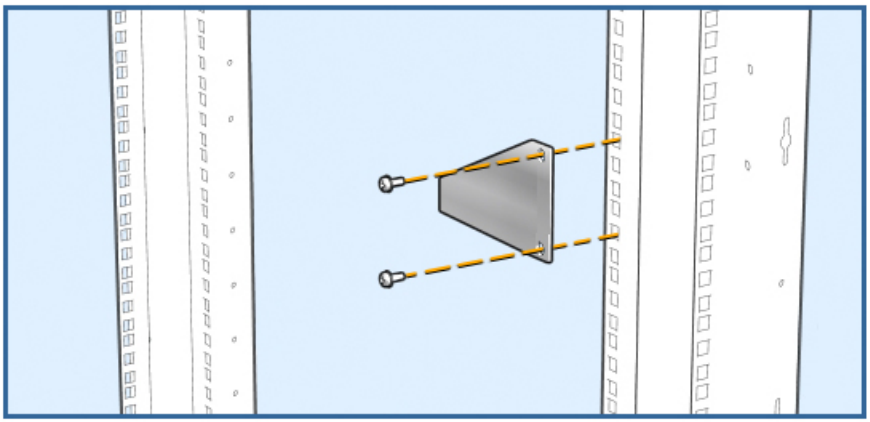

2.4.2 Install the Slides

Mount the slides so that the space between them is slightly less than the width of the drawer.

1. Align one slide by centering the holes at both ends over the cage nuts in holes 113 and 110 in the front and rear rails (see Figure 2–9). Attach the slide to the rails with 2 M6 screws at each end. Tighten the screws to secure the slide.
2. Align and attach the other slide, but do not tighten the screws. This allows for horizontal alignment during installation of the I/O drawer.

Figure 2–9 Installing the I/O Drawer Slides

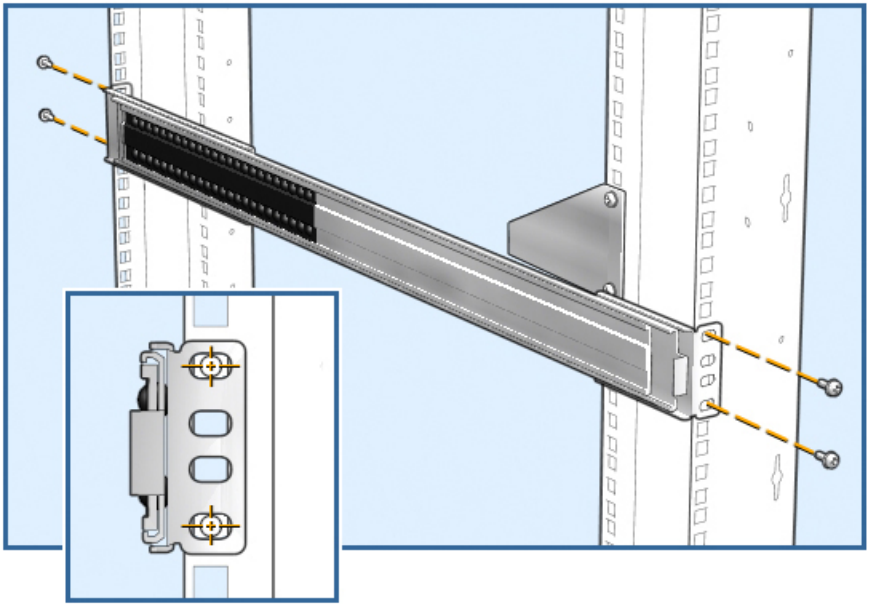

2.4.3 Install the I/O Drawer

1. Check that no cables are in the way. If necessary, dress any cables that might interfere with installation of the I/O drawer.
2. At the rear of the cabinet pull the slides out. Align the slides with the drawer (see Figure 2–10) and place the drawer on them. The slides must be straight and vertical when the drawer is engaged.

NOTE: Failure to align the slides properly and to maintain the alignment as the drawer is installed can result in damage to the bearings.

Figure 2–10 Aligning the I/O Drawer and Rail Slides

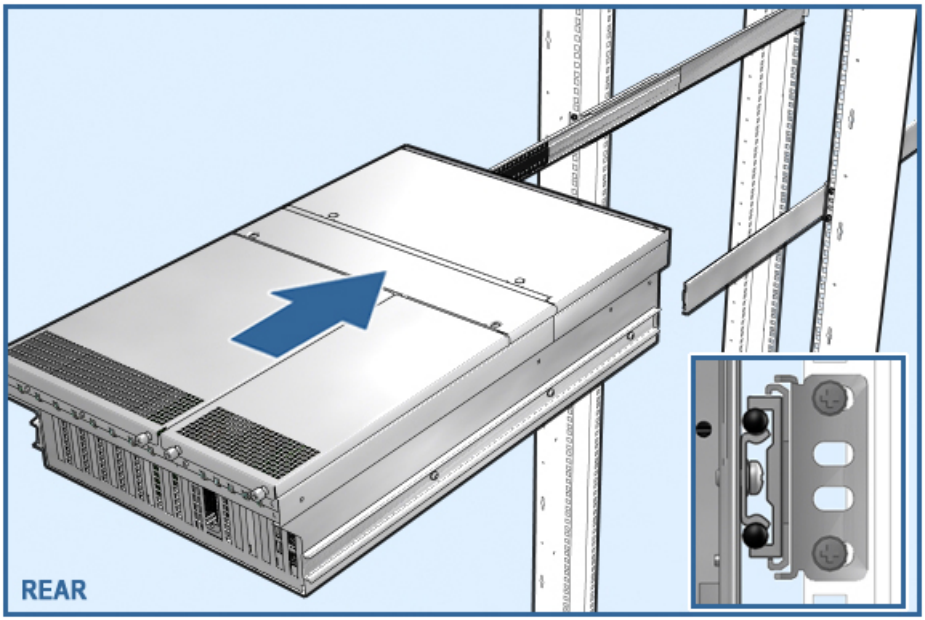

3. Push the drawer into the cabinet until the slides and latches are fully engaged (see Figure 2–11).
4. Tighten the screws of the slide that was installed in step 2 of Section 2.4.2. This secures the slide in its final mounted position.

5. Connect the ground strap to the ground rail with the self-tapping screw.
6. At the front of the cabinet slide the power supplies in place. Push them in until they lock.
7. Replace the cable support assembly that was moved or removed in step 1 of Section 2.4.1.
8. Connect the power cords and cables removed in step 3 of Section 2.3.2.1.

Figure 2–11 Installing the I/O Drawer

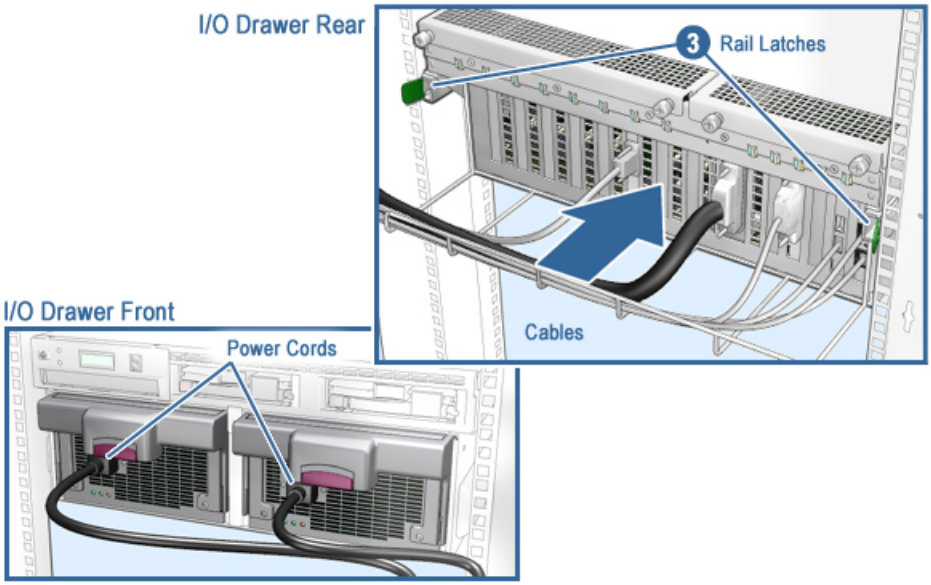

2.5 Install the Second Power Distribution Unit

See the installation instructions included with the power distribution unit (PDU). The second PDU is installed in the position shown in Figure 2–12.

Figure 2–12 Location of Power Distribution Unit

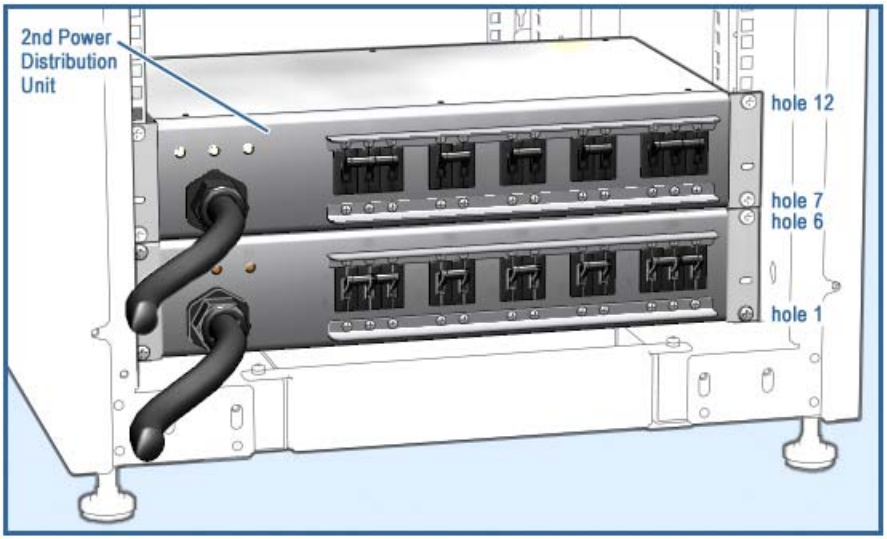

2.6 Install the Power Subrack

2.6.1 Install the Subrack

Parts used in this step:

Quantity	Description	Part Number
12	M6 cage nuts	90–11476–01
6	M5 Phillips head screws	90–09984–18
2	M6 kepnuts	90–40148–01
4	M6 Phillips head screws	90–09984–41

1. Install cage nuts in the rails as shown in Figure 2–13. The illustration shows the section of the rail and the holes in which to install the cage nuts.

Figure 2–13 Cage Nuts for Power Subrack Installation

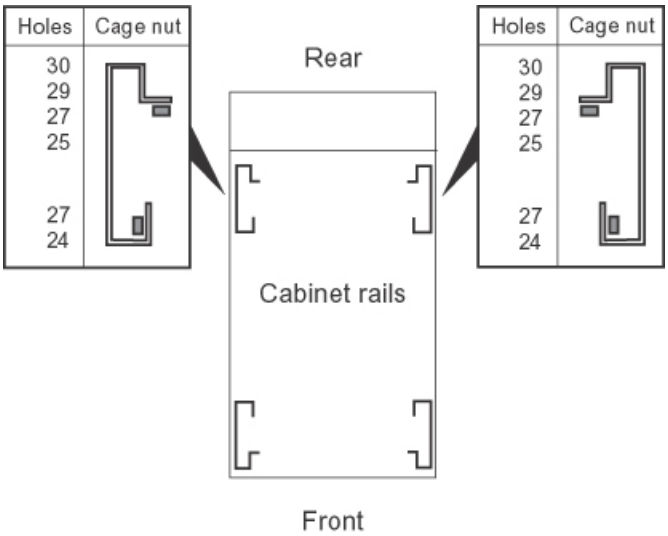

2. At the front of the cabinet align the stud of each bracket with cabinet rail hole 24 as shown in Figure 2–14. Use the square half-shears as an aid in aligning the bracket. Secure each bracket to the rail with one M6 kepnut.

3. At the rear of the cabinet, attach the bracket to rail holes 27 and 24 with M6 Phillips head screws.
4. Slide the subrack onto the brackets and secure it at the rear with one M5 Phillips head screw on each side.
5. Secure the subrack to each of the front rails with M5 Phillips head screws in holes 32 and 26.

Figure 2–14 Installing the Power Subrack

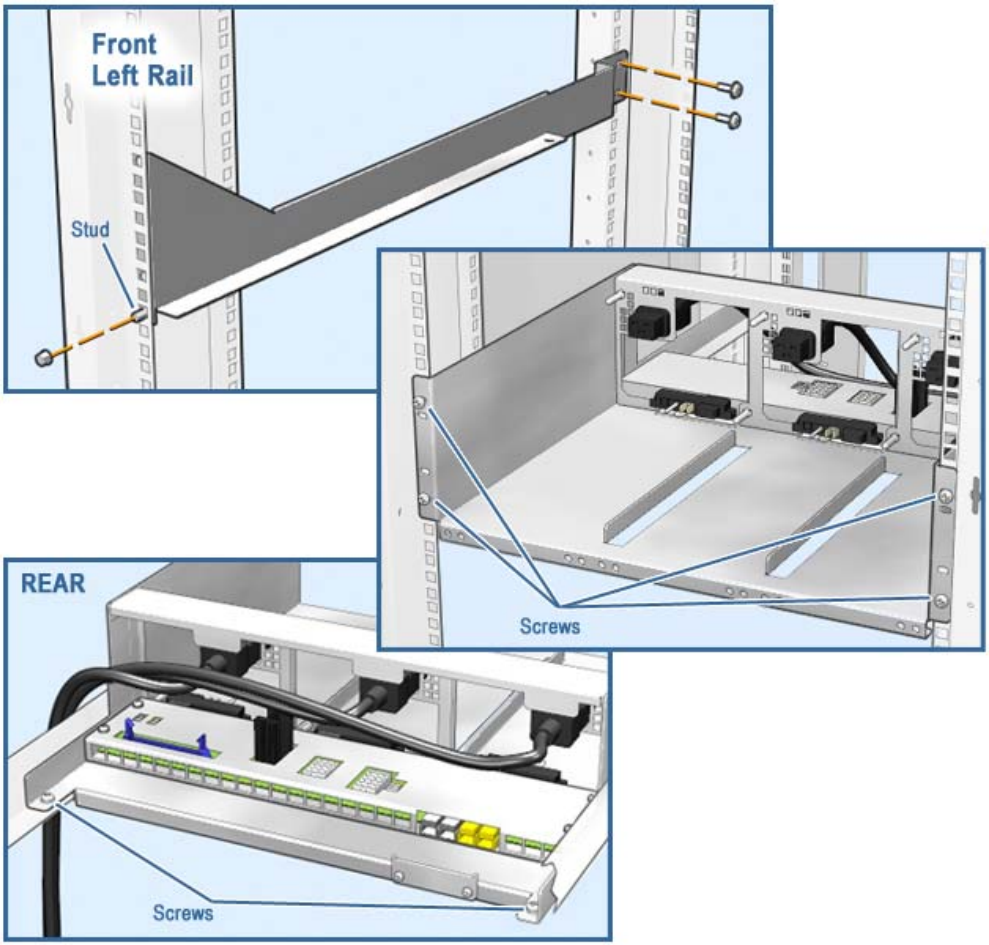

2.6.2 Install the Power Supplies

Place each power supply on the subrack and secure it with the two captive screws. See Figure 2–15.

Figure 2–15 Installing the Power Supplies

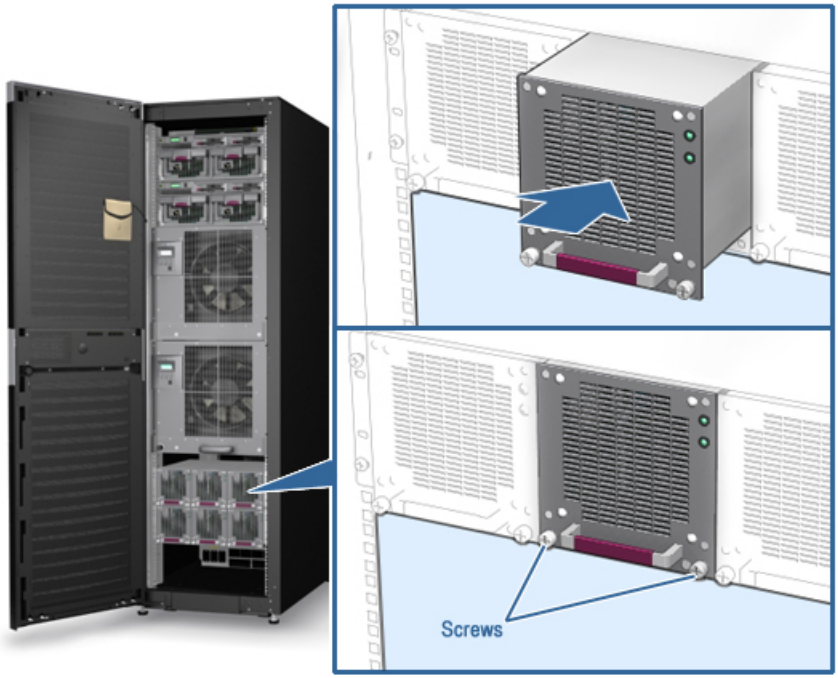

2.6.3 Install the Power Interface Assembly

Parts used in this step:

Quantity	Description	Part Number
8	M6 Phillips head screws	90–09984–41

At the rear of the cabinet attach the power interface assembly (WPI) to the cabinet rails at holes 30, 29, 27, and 25. Use four M6 Phillips head screws on each side. See Figure 2–16.

Figure 2–16 Installing the Power Interface Assembly

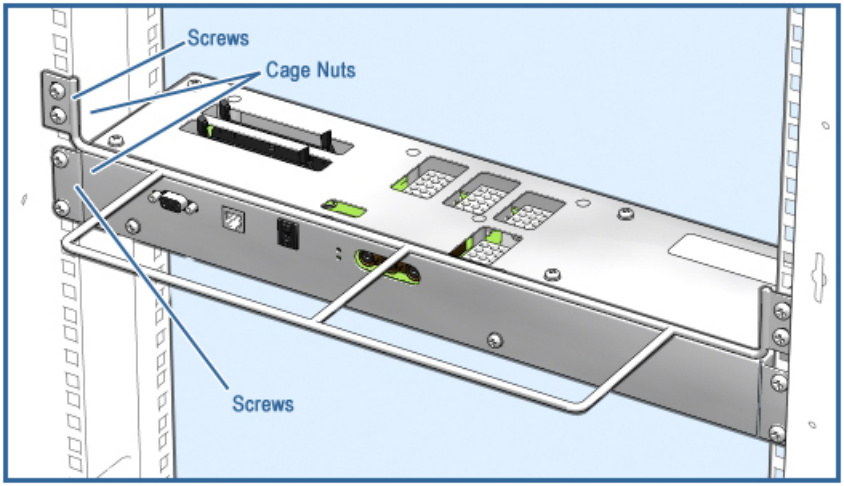

2.7 Install the 8P Drawer

2.7.1 Install the Slide Brackets

Parts used in this step:

Quantity	Description	Part Number
1	Front left slide bracket	74–61935–01
1	Rear left slide bracket	74–61936–01
1	Front right slide bracket	74–61937–01
1	Rear right slide bracket	74–61938–01
28	M6 cage nuts	90–11476–01
24	M6 hex bolts	90–40219–01

Tools required: 10mm socket.

1. Install cage nuts in the locations indicated in Figure 2–17. The illustration shows the part of the rail and the holes in which to install the cage nuts.

Figure 2–17 Cage Nuts for 8P Drawer 1 Installation

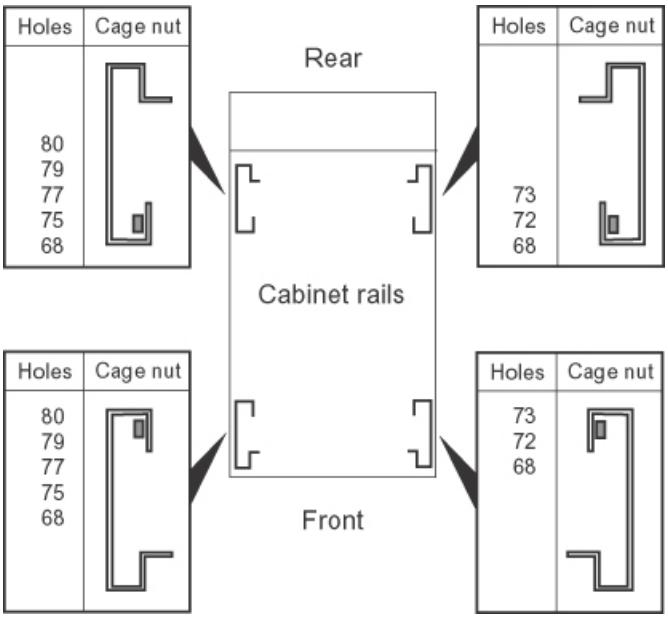

2. Install cage nuts on the brackets as shown in Figure 2–18.

3. One bracket is installed on each cabinet rail. These brackets have unique part numbers; Table 2–2 lists the bracket that is installed on each rail. Align the tab at the bottom of each bracket with hole 67 of the outer rail as shown in Figure 2–18.
4. Secure the brackets to the cabinet rails with M6 hex bolts in the holes listed in Table 2–2. For each bracket, tighten the bolts on the inner rail first, then tighten the bolts on the outer rail at the end of the bracket. (The inner part of the rail is closer to the center of the cabinet; the outer part is closer to the front or rear of the cabinet.) Tightening the bolts on the outer rails first can damage the brackets.

Table 2–2 Brackets for 8P Drawer Slides

		Install Bolts in These Holes	
Bracket Part Number	**Install on This Rail**	**Inner Rail Holes**	**Outer Rail Holes (End of Bracket)**
74–61935–01	Front left	80, 79, 68	70, 69, 68
74–61936–01	Rear left	80, 79, 68	80, 79, 75, 74, 68
74–61937–01	Front right	73, 72, 68	70, 69
74–61938–01	Rear right	73, 72, 68	70, 68

Figure 2–18 Installing Brackets for 8P Drawer Slides

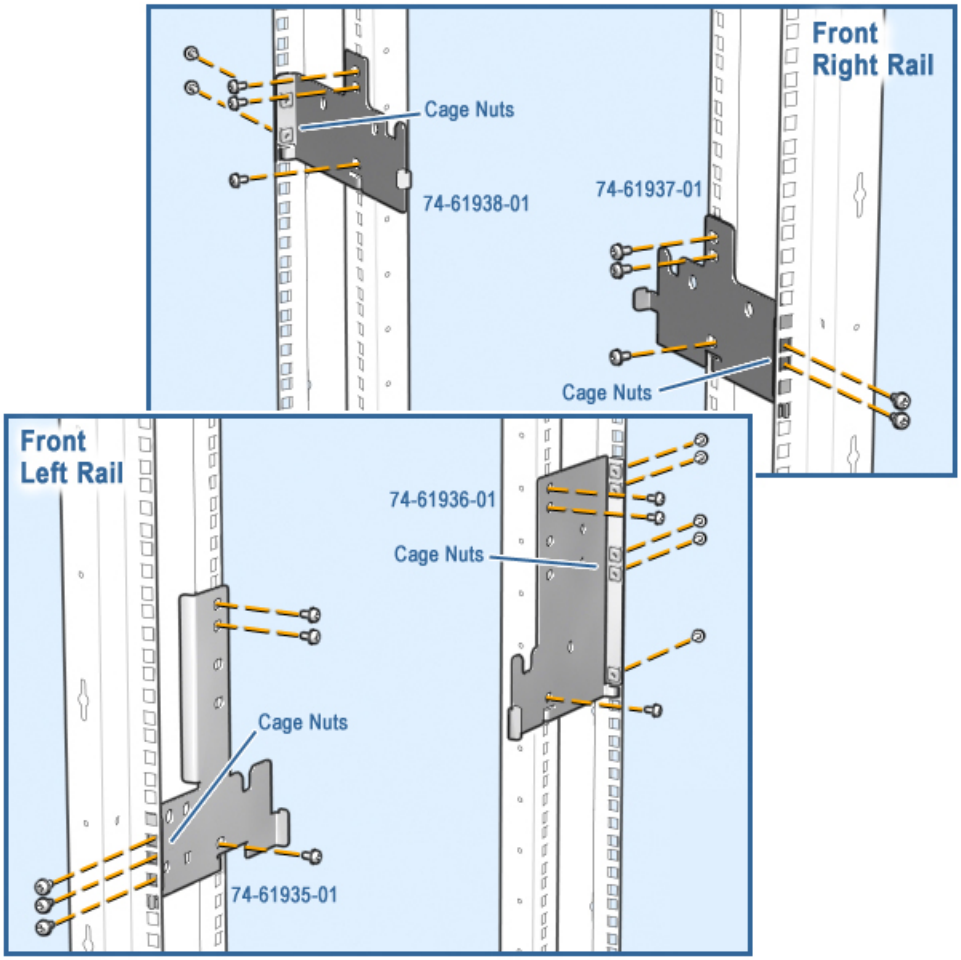

2.7.2 Install the Slides

Parts used in this step:

Quantity	Description	Part Number
1	Frame assembly	70–40876–01
2	Angle bracket	74–62408–01
1	Front support bracket	74–61929–01
1	Rear support bracket	74–61942–01
6	M8 hex bolts 25 mm	90–40391–02
11	External tooth washers	90–40390–01
11	M8 flat washers	90–40389–01
5	M8 hex bolts 35 mm	90–40391–03
14	M6 hex screws	90–40219–04

Tools required: 10 mm and 13 mm sockets.

1. Install the right slide (see Figure 2–19). Attach it to the front and rear right brackets with four M8 hex bolts 25 mm, four external tooth washers, and four M8 flat washers. Use a 13 mm socket.

Figure 2–19 Installing the 8P Drawer Slide—Right Side

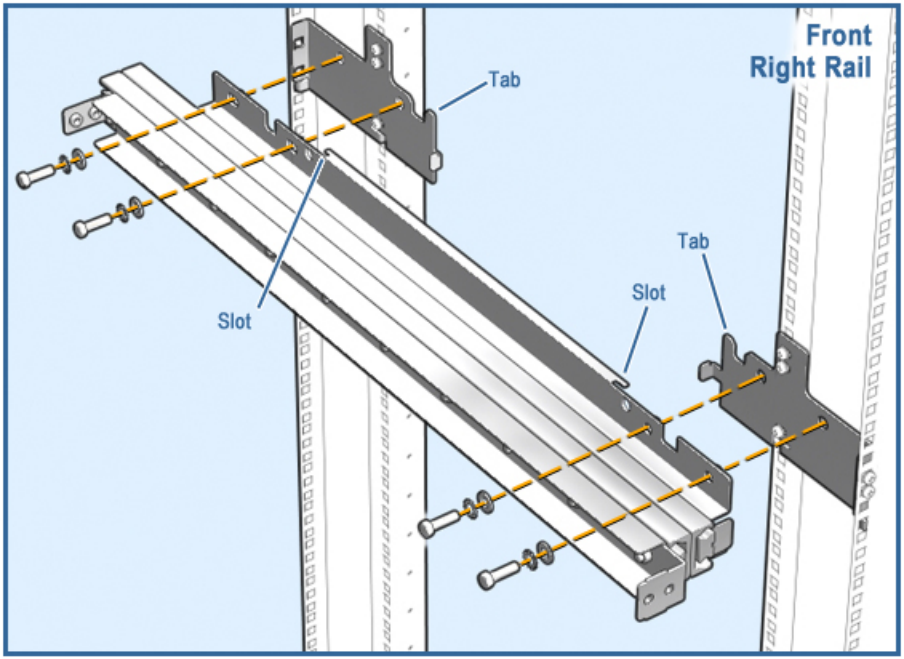

2. Install the left slide.

   a. Attach the frame assembly (70–40876–01) to the front left bracket with two M8 hex bolts 25 mm, two external tooth washers, and two M8 flat washers. Attach it to the rear left bracket with one M8 hex bolt 35 mm, one external tooth washer, and one M8 flat washer. Use a 13 mm socket. See Figure 2–20.

   b. Attach the two angle brackets (74–62408–01) to the left rear bracket with two M6 hex screws in the top of each. Attach them to the frame assembly with one M6 hex screw in each. Use a 10 mm socket.

   c. Attach the slide to the frame assembly with four M8 hex bolts 35 mm, four external tooth washers, and four M8 flat washers. Use a 13 mm socket.

Figure 2–20 Installing the 8P Drawer Slide—Left Side

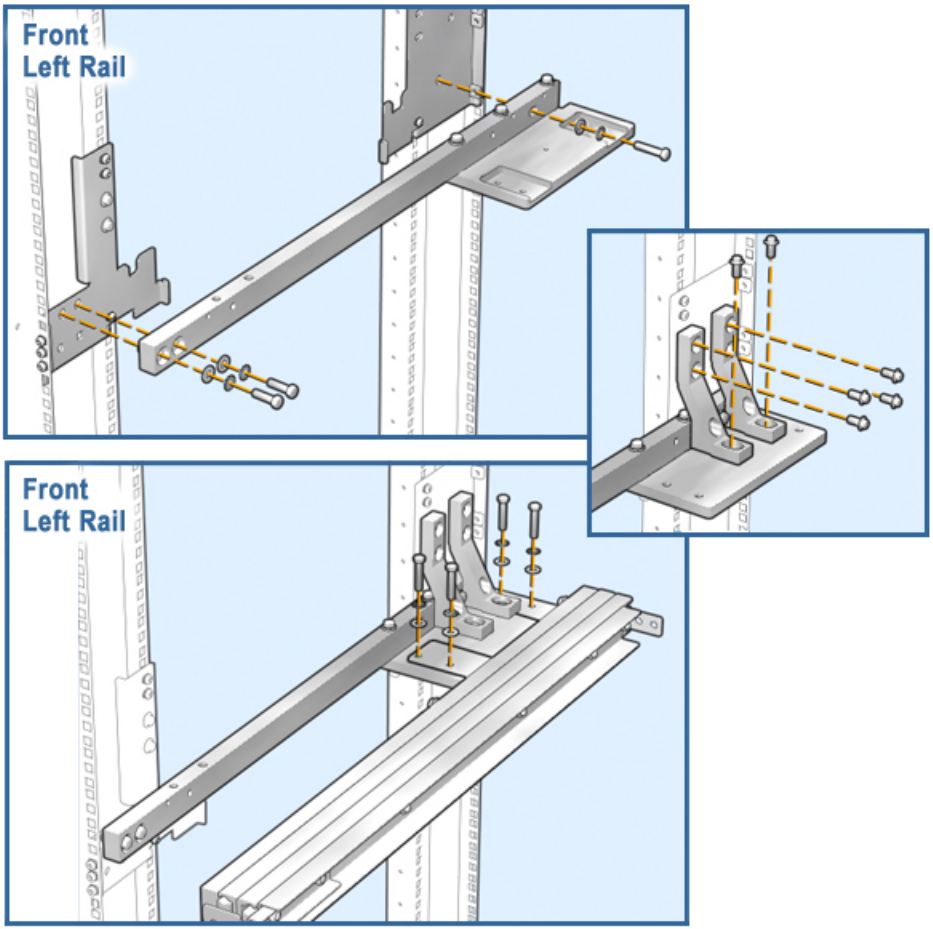

3. Install the support brackets (see Figure 2–21).
   a. Install the front bracket (74–61929–01) with four M6 hex screws. Use a 10 mm socket.
   b. Install the rear bracket (74–61942–01). If the holes on the bracket do not line up with the holes on the ends of the slides, move the slides forward until the holes line up. Attach the bracket with four M6 hex screws. Use a 10 mm socket.

Figure 2–21 Installing the Slide Support Brackets

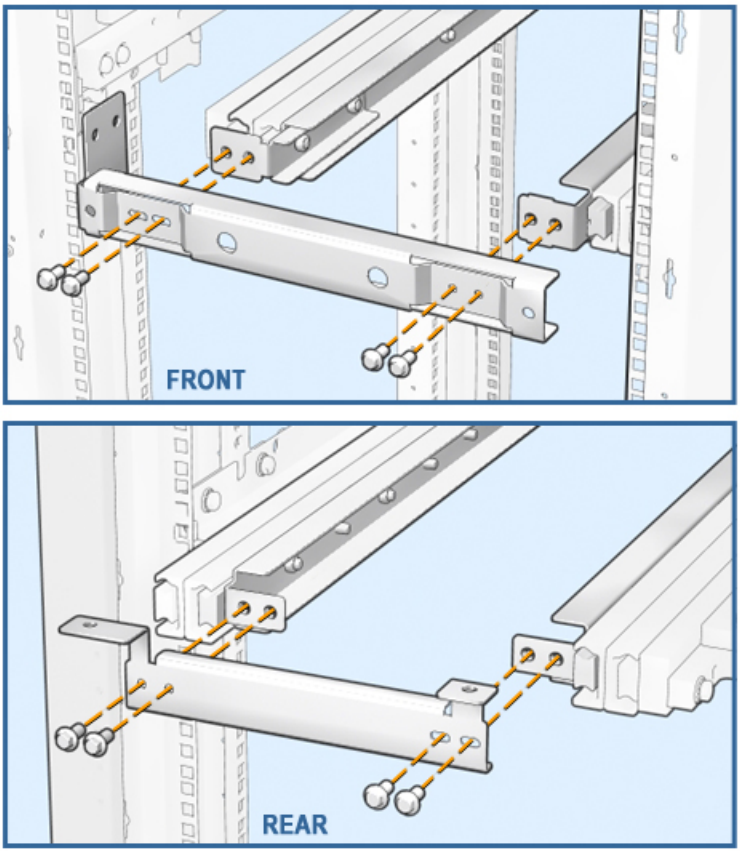

2.7.3 Install the Drawer

Parts used in this step:

Quantity	Description	Part Number
2	L-shape mounting bracket	74–61945–01
2	M6 hex bolts	90–40219–02
4	M8 nuts	90–10754–04
4	External tooth washers	90–40390–01
4	M8 flat washers	90–40389–01
2	M6 hex screws	90–40219–04
2	Screws	90–00063–01
4	M5 sems screws	90–09984–18
1	Self-tapping screw	128557–001

Tools required: 13 mm socket.

1. At the front of the cabinet pull the slides all the way out. Lift the drawer onto the slides.
2. Attach the plate.
   a. Remove four screws from the bottom of the front panel. Position the plate on the panel and replace the four screws (see Figure 2–22).
   b. Pull the slides forward to the plate. Secure the plate to the slides with two M6 hex bolts.

Figure 2–22 Installing the 8P Drawer Plate

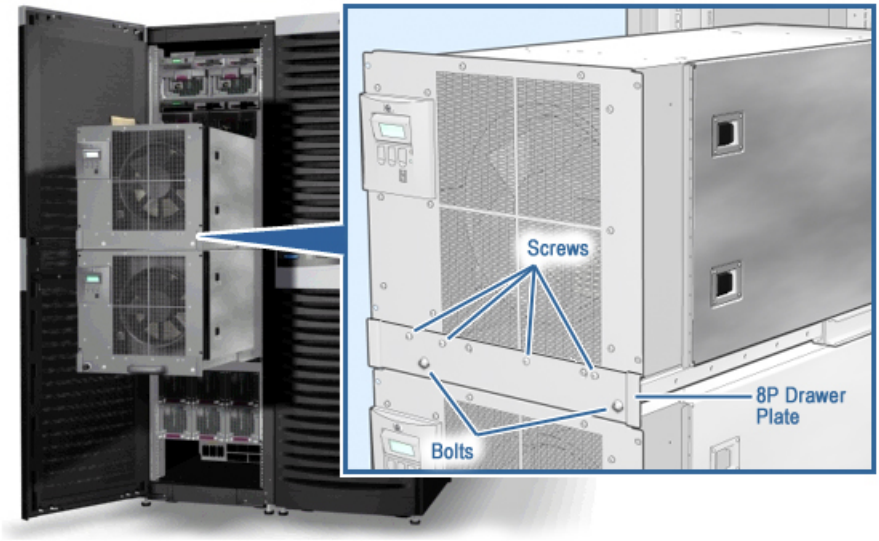

3. Install the vertical support bracket.
   a. Insert the key and twist the lock on drawer 0 to the left. Pull the drawer out.
   b. Attach the vertical support bracket to the two drawers with four M8 nuts, four external tooth washers, and four M8 flat washers. Use a 13 mm socket. See Figure 2–23.
4. Install the tie bracket (Figure 2–23), which acts as a stiffener, on the vertical support with two M6 hex screws. Secure it to drawer 0 with two screws.

Figure 2–23 Installing the Vertical Support and Tie Bracket

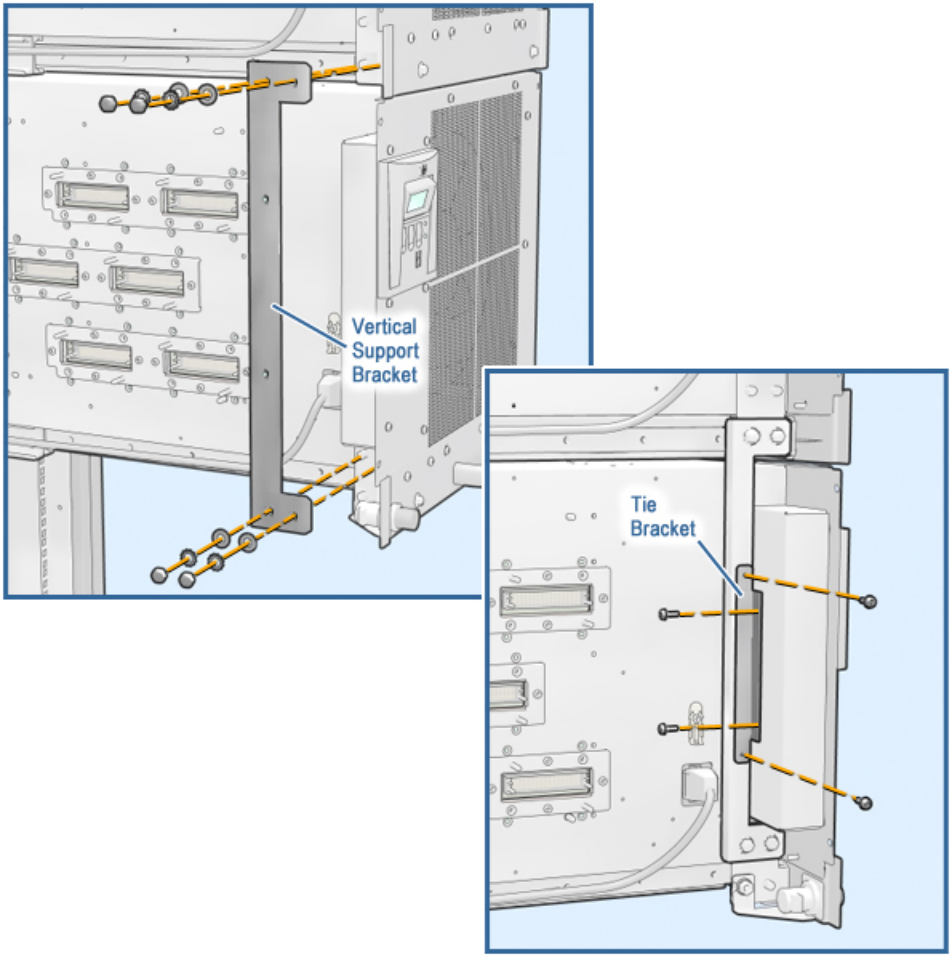

5. Push the 8P drawers into the cabinet. Install the two L–shaped mounting brackets (74–61945–01) and the ground strap on the rear of the 8P box with two M5 sems screws on each bracket. See Figure 2–24.
6. Attach the ground strap to the ground rail with the self-tapping screw.

Figure 2–24 Installing Rear Brackets and Ground Strap

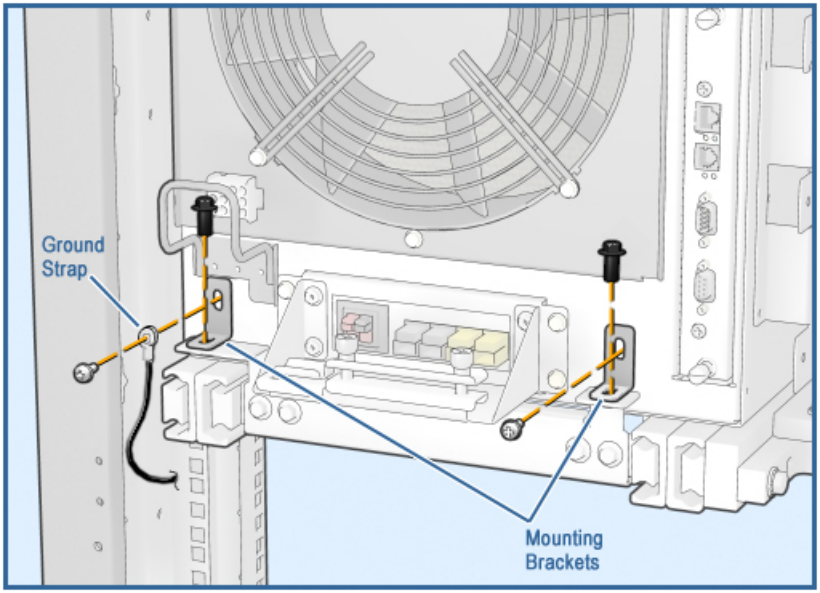

2.7.4 Install the 48V Power Harness

2.7.4.1 Install the Cable Management Bracket

Parts used in this step:

Quantity	Description	Part Number
1	Cable management bracket	70–40954–01
2	M6 cage nuts	90–11476–01
2	M6 hex bolts	90–40219–02
2	M4 kepnuts	90–40346–01

1. At the rear of the cabinet install two cage nuts on the left rail as shown in Figure 2–25. The illustration shows the section of the rail and the holes in which to install the cage nuts.
2. Secure the cable management bracket (70–40954–01) to the rail with two M6 hex bolts and to the cabinet with two M4 kepnuts. See Figure 2–26.

Figure 2–25 Cage Nuts for 8P Power Harness Bracket

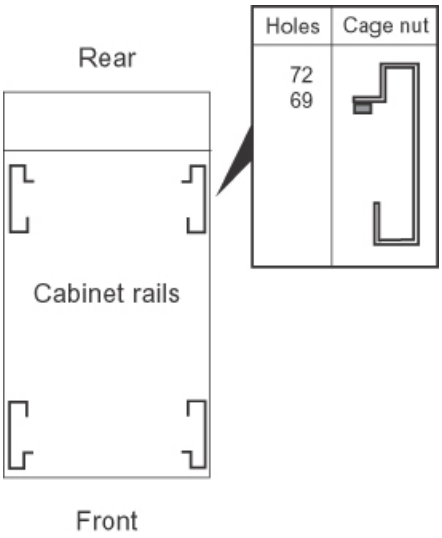

Figure 2–26 Installing the 8P Power Harness Bracket

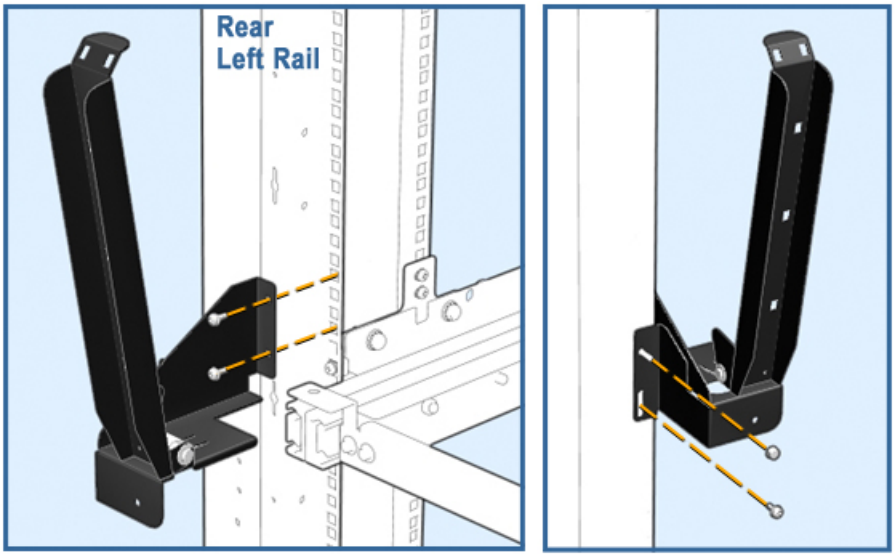

2.7.4.2 Install the 48V Power Harness

Parts used in this step:

Quantity	Description	Part Number
1	Blower cable	17–05117–02
4	Cable clamps	90–07083–00
4	Sems screws	90–09984–19
1	Cable holder	12–56617–01

1. Slide the 8P drawers fully into the cabinet.
2. Remove the top part of the strain relief bracket on drawer 1 (see Figure 2–27), install the 48V and Vaux connectors into the line filter, and reassemble the strain relief bracket.
3. Connect P3 of the blower cable (17–05117–02) to the connector at the back of drawer 1.
4. Connect the server management cable that was run along the NAT mounting bracket in Section 2.4.1 to the MBM.
5. Place the power harness on the cable management bracket. Position the tape supplied on the power harness under the top cable tie. Secure the harness loosely to the bracket.
6. Insert the point of the cable holder into the hole to the right of the strain relief bracket (see Figure 2–28).
7. Pull the drawers out and connect P4 of the blower cable to the front side of the drawer. Slide three cable clamps onto the cable and attach them to the side of the drawer with sems screws as shown in Figure 2–27.
8. Check the length of the service loop and adjust if necessary. Secure the cables to the cable management bracket.
9. Push the drawers in. Insert the blower cable into the cable holder and twist the cable holder.
10. Connect the server management cable to the cabinet OCP.

Figure 2–27 Installing the 8P Power Harness

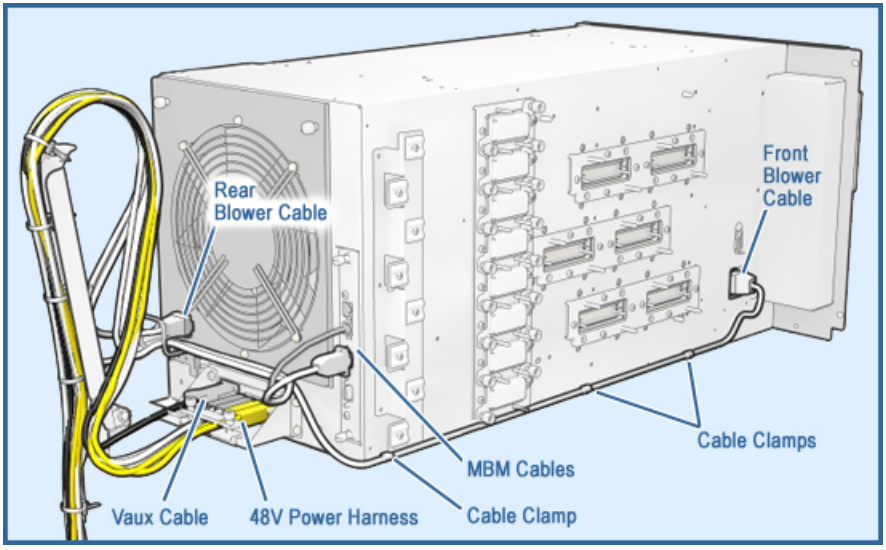

Figure 2–28 Cable Holder

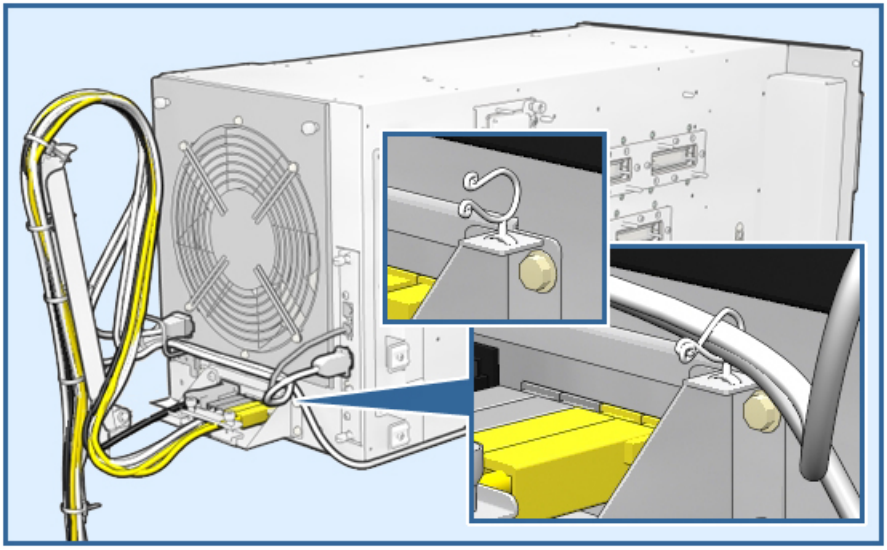

2.7.5 Remove Two Loopback Modules from Drawer 0

Remove the loopback modules from the upper and lower North-South connectors on drawer 0.

1. Loosen the captive screw on the cover and remove the cover (see Figure 2–29).
2. Pull the levers on the loopback module apart and remove the module.
3. Remove the loopback module housing by removing the four screws. Save the screws.

Set one loopback connector assembly aside to be used as a spare. Install the other on drawer 1 (see Section 2.7.6).

Figure 2–29 Removing Loopback Modules

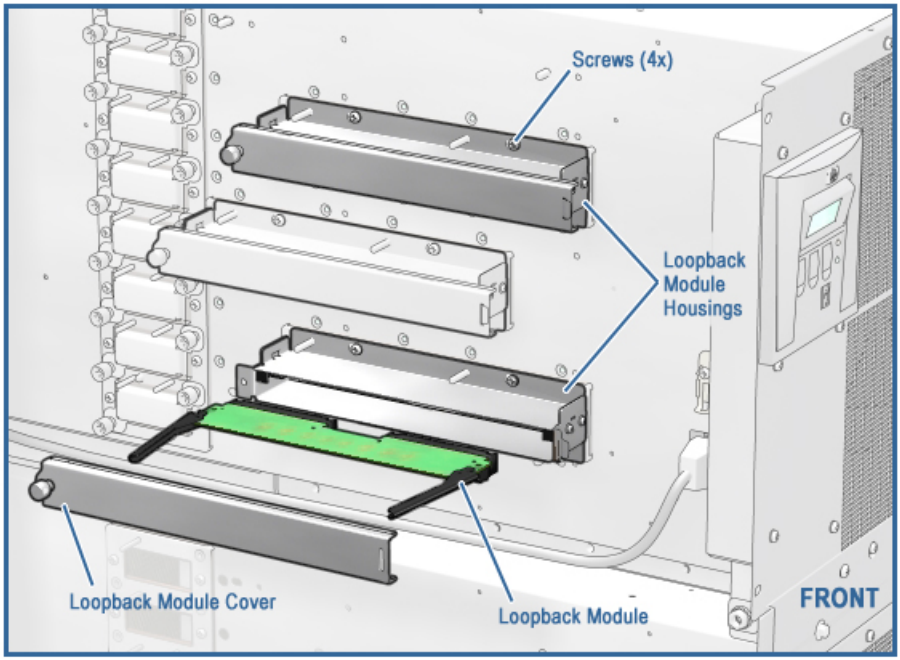

2.7.6 Install a Loopback Module on Drawer 1

Figure 2–30 shows the loopback module installation.

1. Attach the loopback module housing over the East-West connectors with the saved screws.
2. Insert the loopback module in the housing. Press the levers in.
3. Attach the cover to the housing and tighten the captive screw.

Figure 2–30 Installing a Loopback Module

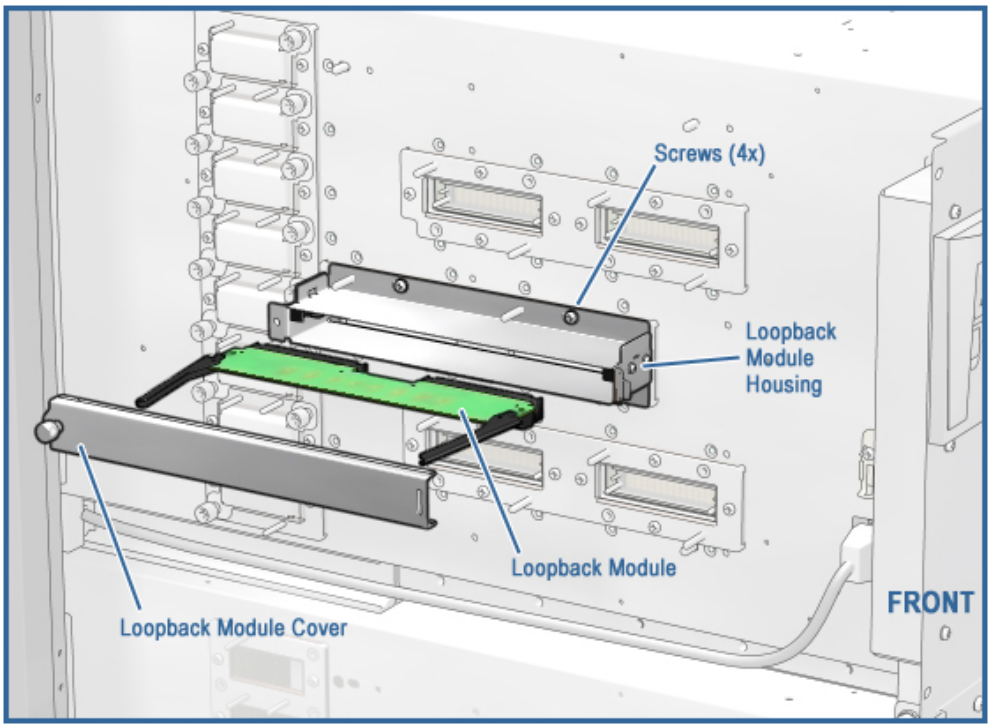

2.7.7 Install the Interprocessor Cables

1. Pull out the 8P drawers far enough to give you access to the interprocessor (IP) cable connectors.
2. Install one end of each of the four interprocessor cables (17–05019-01) in the drawer 1 connectors (see Figure 2–31).

Figure 2–31 Interprocessor Cable Connectors

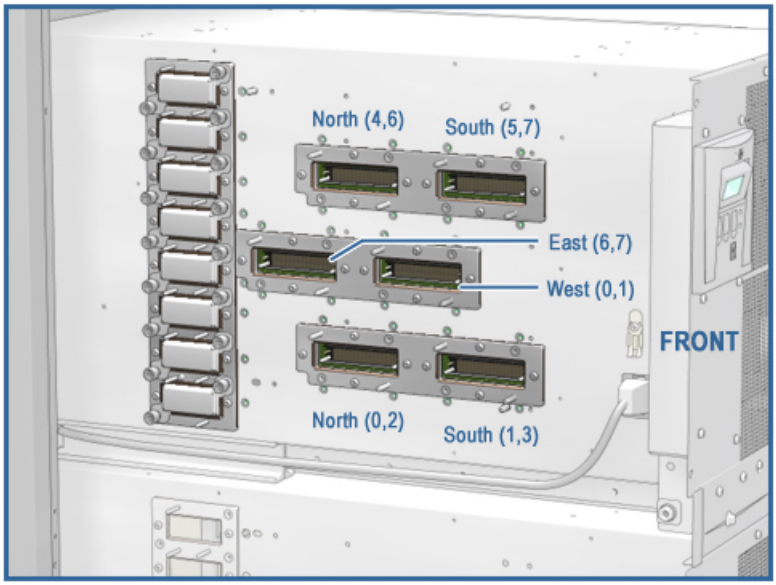

3. To keep the cables close to the drawers, they must be woven before they are installed in the drawer 0 connectors. Weave the cables and install them in the drawer 0 connectors in the order listed in Table 2–3. When finished, press the cables in toward the drawers. The cables should look like Figure 2–32.

Table 2–3 Interprocessor Cable Weaving

From Connector (drawer 1)	Routing (all referenced connections are in drawer 1)	Install Free End in Connector (drawer 0)
North 4, 6	Over the cable connected to South 5, 7. Then under the cable connected to South 1, 3.	South 5, 7
South 5, 7	Over the cable connected to North 0, 2.	North 4, 6
North 0, 2	Over the cable connected to South 1, 3.	South 1, 3
South 1, 3	Routing completed.	North 0, 2

Figure 2–32 Interprocessor Cables

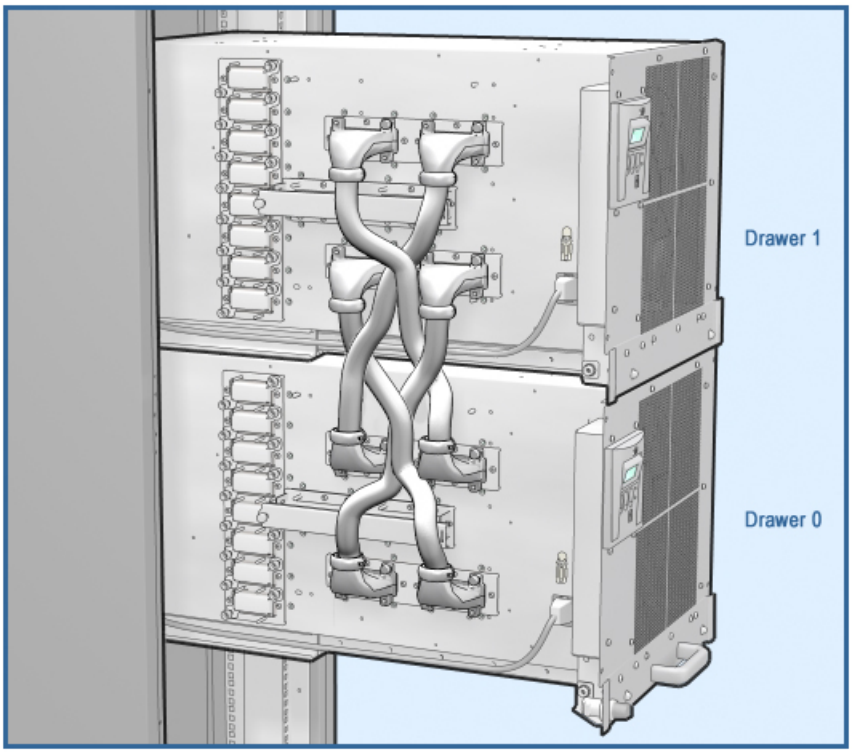

2.7.8 Install the I/O Cables

Parts used in this step:

Quantity	Description	Part Number
2	M6 cage nuts	90–11476–01
2	M6 screws	90–09984–41
2	M4 nuts	90–40346–01

4. Install the skid plate (74–60656–01): loosen the hex bolt in hole 68 of the left rear rail (this rail is on the right when you are at the rear of the cabinet) and slide the plate in (see Figure 2–33); tighten the bolt.

Figure 2–33 Installing the Skid Plate and I/O Cable Bracket

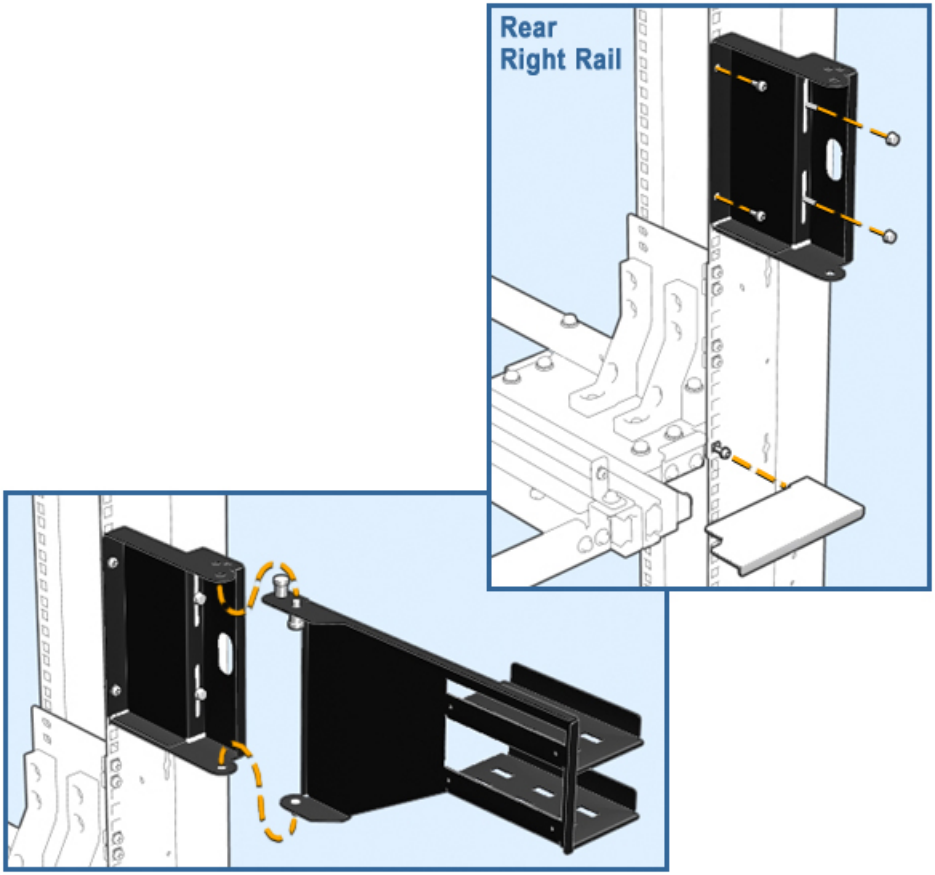

5. Install the cable management bracket.

   a. Install cage nuts as shown in Figure 2–34. The illustration shows the section of the rail and the holes in which to install the cage nuts.

Figure 2–34 Cage Nuts for I/O Cable Bracket

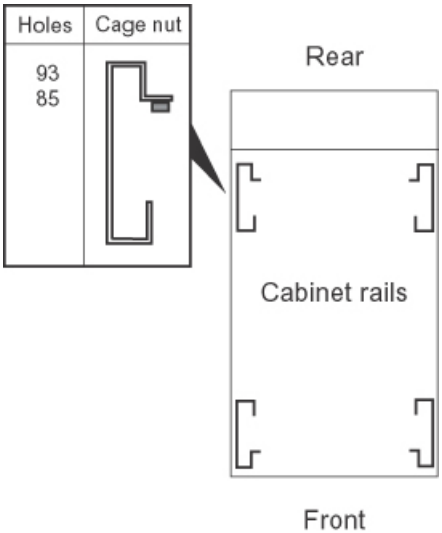

   b. Secure the stationary section of the bracket (74–62333–01) to holes 93 and 85 with M6 screws and to the studs with two M4 nuts. See Figure 2–33.

   c. Place the bottom pin of the movable part of the bracket (70–40955–01) in the bottom hole of the stationary part. Pull down the spring-loaded pivot pin and position it in the top hole.

6. Install the I/O cables in the I/O connectors of the 8P drawer and loop them over the the cable management bracket as shown in Figure 2–35.

Figure 2–35 I/O Cables

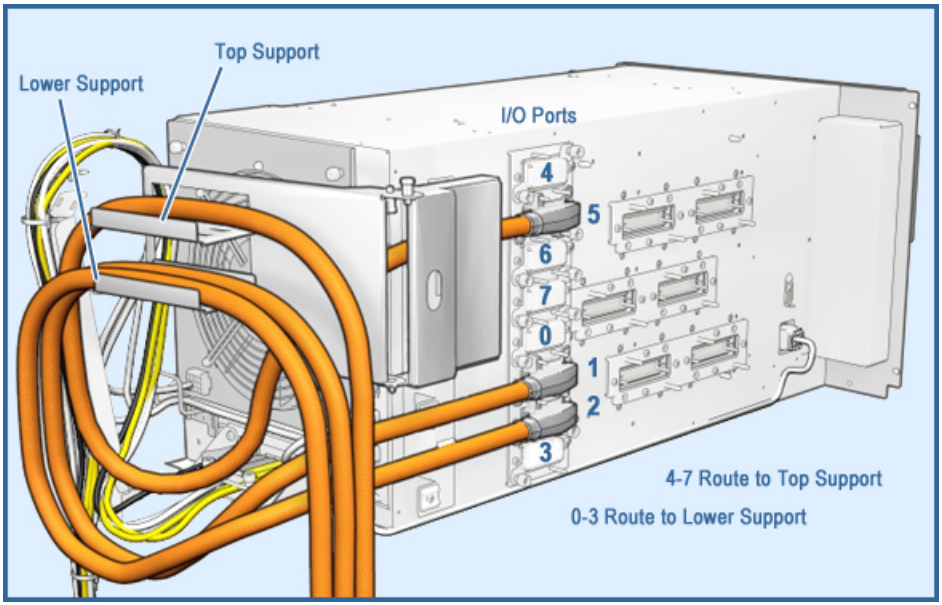

2.7.9 Install the Memory Modules

Memory modules (RIMMs) are installed in connectors on the CPU module.

1. Place the CPU module on an ESD mat.
2. Open the RIMM hold-down bracket (see Figure 2–36):
   a. Loosen the two plastic cap screws that release the far end of the bracket.
   b. Swing the free end up and pull the other end off the plastic pegs.
3. If you are adding a RIMM to an array, check that the RIMM size matches the other RIMMs in the array.
4. Insert the RIMM and press it into the connector. The locking levers on the sides of the connector should close.
5. Replace the hold-down bracket.
6. Install the CPU module (see Section 2.7.10).

Figure 2–36 Installing a Memory Module

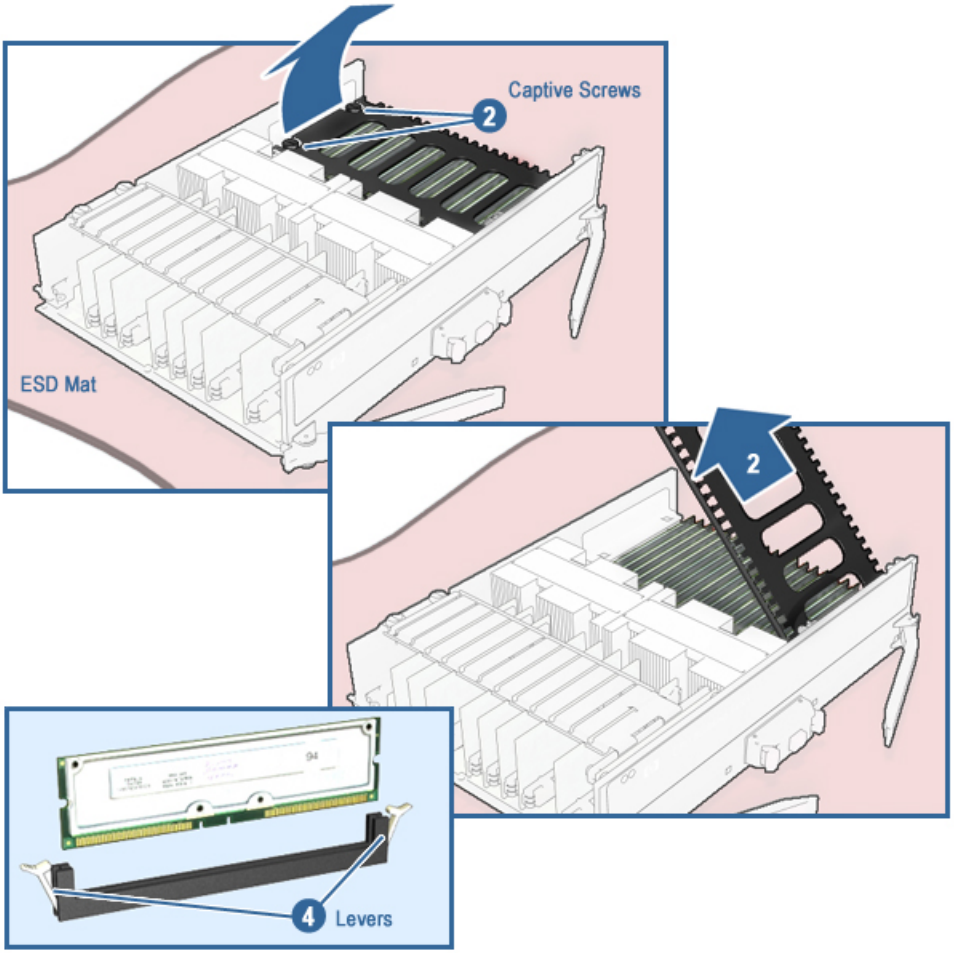

2.7.10 Install the CPU Modules

The 8P drawer is shipped with filler modules installed. Replace the filler modules as needed with CPU modules.

Table 2–4 lists the proper placement of CPU and filler modules in a Model 16 system, and Figure 2–37 shows module slot numbering. Use the instructions that follow for installing the modules.

1. Inspect the plastic connectors on the module for damage. If a connector is damaged, do not use the module.
2. Slide the module into place. Be sure the module is in the module guides.

CAUTION: Damage can result if the levers are closed when the module is not properly seated.

---

3. Close both levers at the same time.

Table 2–4 CPU and Filler Module Placement

Number of Dual-CPU Modules in System	8P Drawer 0 Slots				8P Drawer 1 Slots			
	0, 1	2, 3	4, 5	6, 7	0, 1	2, 3	4, 5	6, 7
8	CPU	CPU	CPU	CPU	CPU	CPU	CPU	CPU
6	CPU	CPU	CPU	Filler	CPU	CPU	CPU	Filler
4	CPU	Filler	CPU	Filler	CPU	Filler	CPU	Filler
2	CPU	Filler	Empty	Filler	CPU	Filler	Empty	Filler
1	CPU	Filler	Empty	Filler	Empty	See note	Empty	See note

NOTE: A filler module can be placed in this slot but is not required. The slot can be left empty.

Figure 2–37 Module Slot Numbering

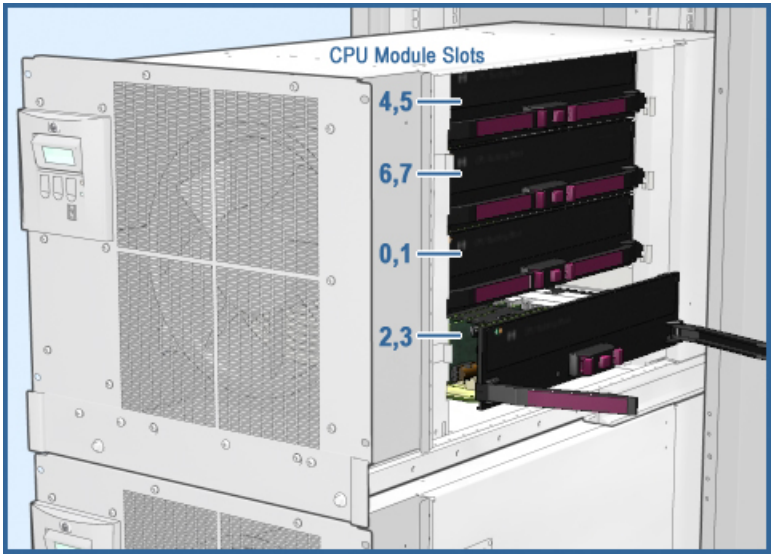

2.8 Connect Cables

2.8.1 OCP Cables

Plug cables into the OCP connectors listed in Table 2–5. See Figure 2–38.

Table 2–5 OCP Cables

Cable from	OCP Connector
Power subrack 0	J1
Power subrack 1	J2
8P drawer 0	J3
8P drawer 1	J4
I/O drawer 0	J5
I/O drawer 1	J6

Figure 2–38 OCP Cable Connectors

2.8.2 Wiring Diagram

Attach all cables and power cords as shown in the wiring diagram (Figure 2–39).

Figure 2–39 Wiring Diagram

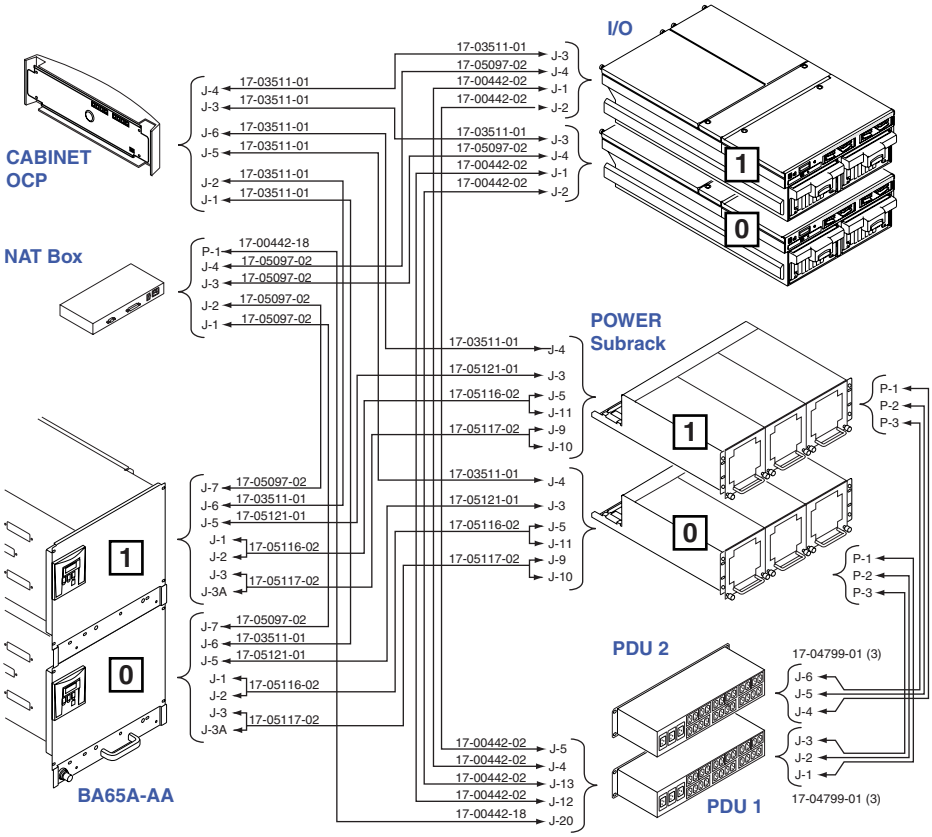

2.9 Set the ID Switches

Each device in the cabinet must have a unique ID. Set the two 8P drawers to 0 and 1, and set the IDs on the power subracks and I/O drawers to numbers between 2 and F (see Figure 2–40).

Figure 2–40 Device ID Switches

2.10 Check Firmware Revisions

1. Power up the system.
2. Issue this command from the MBM prompt:

   ```
   MBM> show version
   ```

3. Update firmware if necessary.

2.11 Verify the System

See Chapter 6 for the verification procedure.

Chapter 3
Side-by-Side Model 8 to Model 16 Upgrade

This procedure combines two Model 8 systems to create a Model 16. Sections in this chapter are:

- Upgrade Kit
- Join the System Cabinets
- Remove Loopback Modules
- Install the Interprocessor Cables
- Connect the NAT Boxes
- Set the ID Switches
- Reconfigure and Verify the System

3.1 Upgrade Kit

The part number for the side-by-side Model 8 to Model 16 upgrade kit is 3X–BNPSB–02. Its contents are listed in Table 3–1.

Table 3–1 Side-by-Side Model 8 to Model 16 Upgrade Kit

Quantity	Part Number	Description
4	17–05019–03	Interprocessor cables (cabinet-to-cabinet)
1	17–04991–03	Ground cable
1	17–05097–01	Ethernet cable
2	128557–001	M5 self-tapping screws
1	EK–GS128–UP	This document

3.2 Join the System Cabinets

1. Position the cabinets. The two system cabinets must be next to each other.
2. Remove the side panels where the system cabinets will be joined (see Figure 3–1).
   a. Open the front door.
   b. Lift the cabinet top cover and remove.
   c. Loosen the panel securing screw at the front bottom of the cabinet for the panel being removed.
   d. Lift the panel up approximately 2 cm until it stops. Pull the panel from the frame and remove.
   e. Tighten the panel securing screw.
3. Roll the cabinets as closely together as possible.
4. Align the front and rear edges of the cabinets.
5. Align the cabinet heights by adjusting the leveling feet (see Figure 3–2).
6. Join the cabinets with four screws as shown.
7. Connect the ground wire (128557–001) to both cabinets as shown in Figure 3–3, using the two M5 self-tapping screws. The ground wire should be attached to each cabinet at the right rear rail (as viewed from the front).

Figure 3–1 Removing the Cabinet Side Panels

Figure 3–2 Joining the System Cabinets

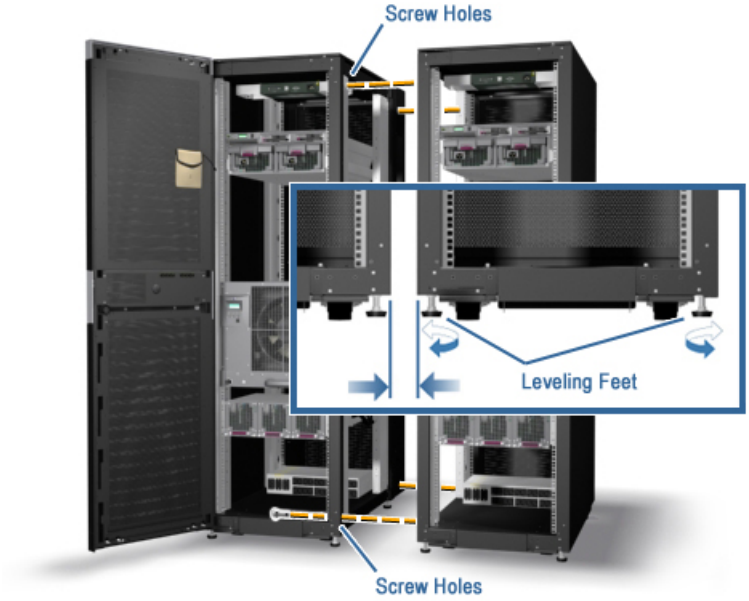

Figure 3–3 Attaching the Ground Wire

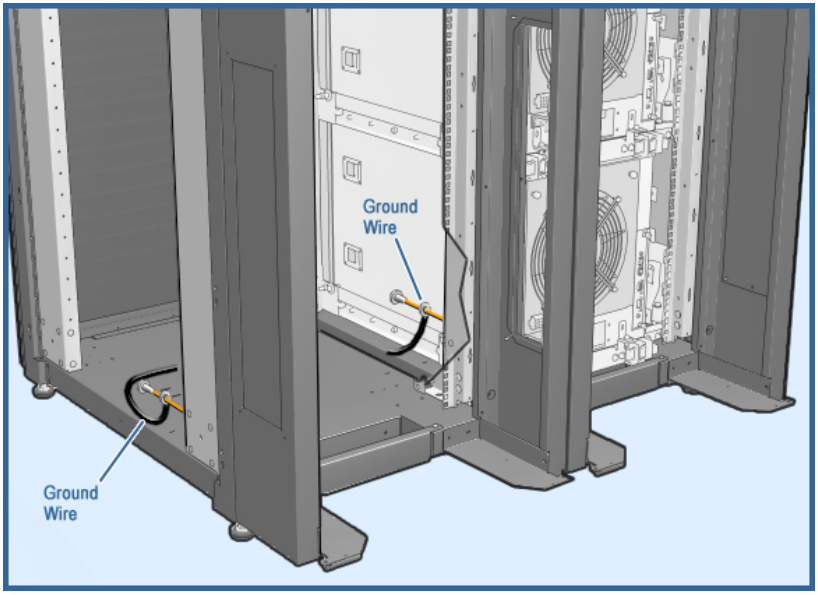

3.3 Remove Loopback Modules

Remove the loopback modules from the upper and lower North-South connectors on both 8P drawers. See Figure 3–4.

1. Loosen the captive screw on the cover and remove the cover).
2. Pull the levers on the loopback module apart and remove the module.
3. Remove the loopback module housing by removing the four screws.

Figure 3–4 Removing Loopback Modules

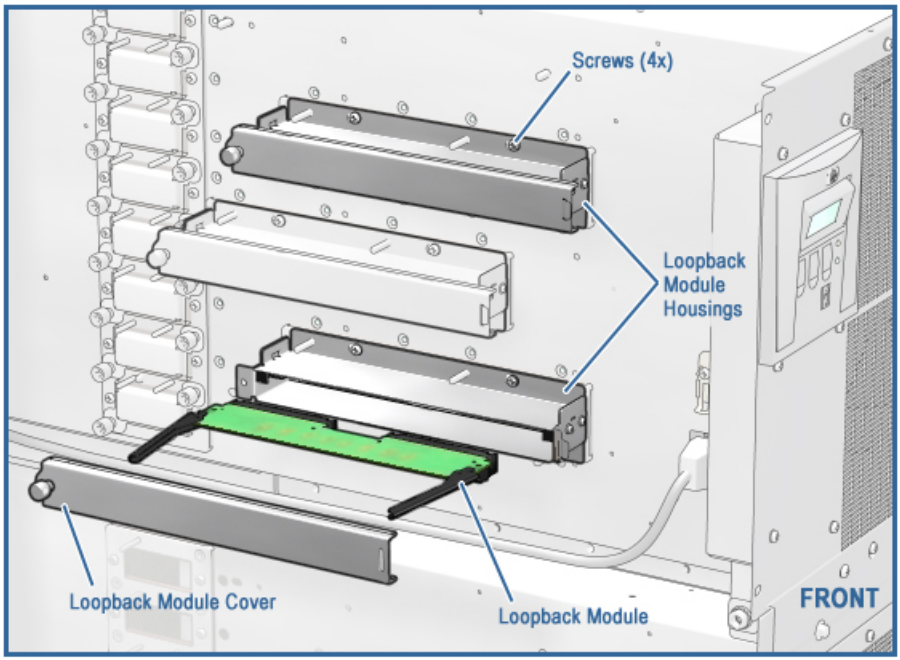

3.4 Install the Interprocessor Cables

1. Install the four IP cables in the North-South connectors (see Figure 3–5) of the 8P drawer in the cabinet on the right (drawer 0).
2. Slide the drawer into the cabinet, guiding the cables out the rear.
3. Loop the cables around the cable management bracket. The cables must lay in a neutral position and not be twisted on the tray. Make the loop large enough to almost reach the bottom of the drawer.
4. Pull the drawer out to test the size of the service loop. When sufficient, secure the cables to the cable management bracket with two cable ties.
5. Route the cables through the opening in the cabinet side and into the cabinet on the left.
6. Loop the cables around the cable management bracket.
7. If necessary, twist the cables to ensure a neutral loop and proper connector orientation.
8. Plug the cables into the connectors of the 8P drawer (drawer 1). See Table 3–2 and Figure 3–6.

Figure 3–5 Interprocessor Cable Routing

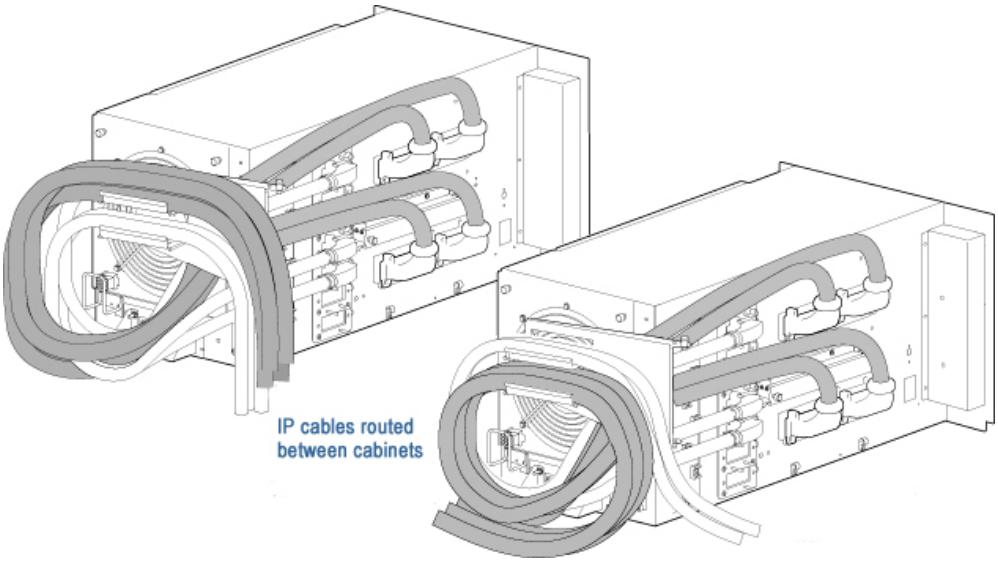

Table 3–2 Interprocessor Cable Routing

From Drawer 0 Connector	To Drawer 1 Connector
South 5, 7	North 4, 6
North 4, 6	South 5, 7
South 1, 3	North 0, 2
North 0, 2	South 1, 3

Figure 3–6 Interprocessor Cable Connectors

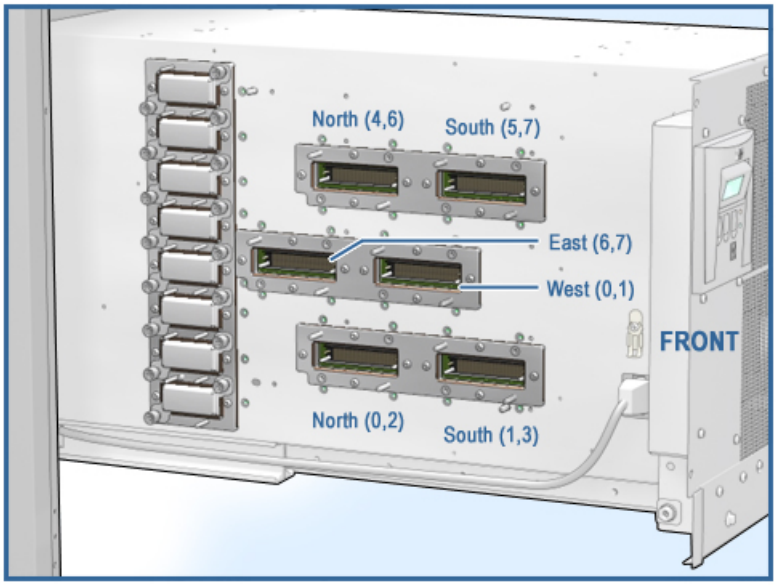

3.5 Connect the NAT Boxes

The internal LAN consists, in part, of the microprocessors on the MBM and PBM modules. This is accomplished by connecting the MBM and PBM in each cabinet to the NAT box in that cabinet and then connecting the NAT boxes to each other.

1. Reseat both ends of all cables between the NAT box in each cabinet and any destination.
2. Using the 39-inch network cable (17–05097–01), make a single connection between the NAT boxes in the two system cabinets. See Figure 3–7. If either of these NAT boxes has an uplink port, make the connection from that port to a LAN port in the other NAT box. Otherwise, connect the NAT boxes from LAN port to LAN port.

Figure 3–7 Connecting the NAT Boxes

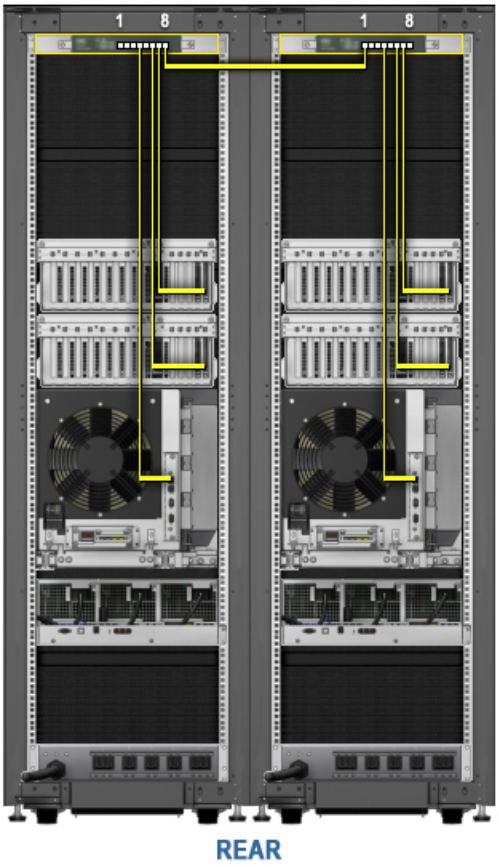

3.6 Set the ID Switches

Set both system cabinet ID switches to 0 (see Figure 3–8). Since the two system cabinets share an ID, each device in the two cabinets must have a unique ID. Set the two 8P drawers to 0 and 1, and set the IDs on the power subracks and I/O drawers to numbers between 2 and F (see Figure 3–9).

Figure 3–8 System Cabinet ID Switch

Figure 3–9 Device ID Switches

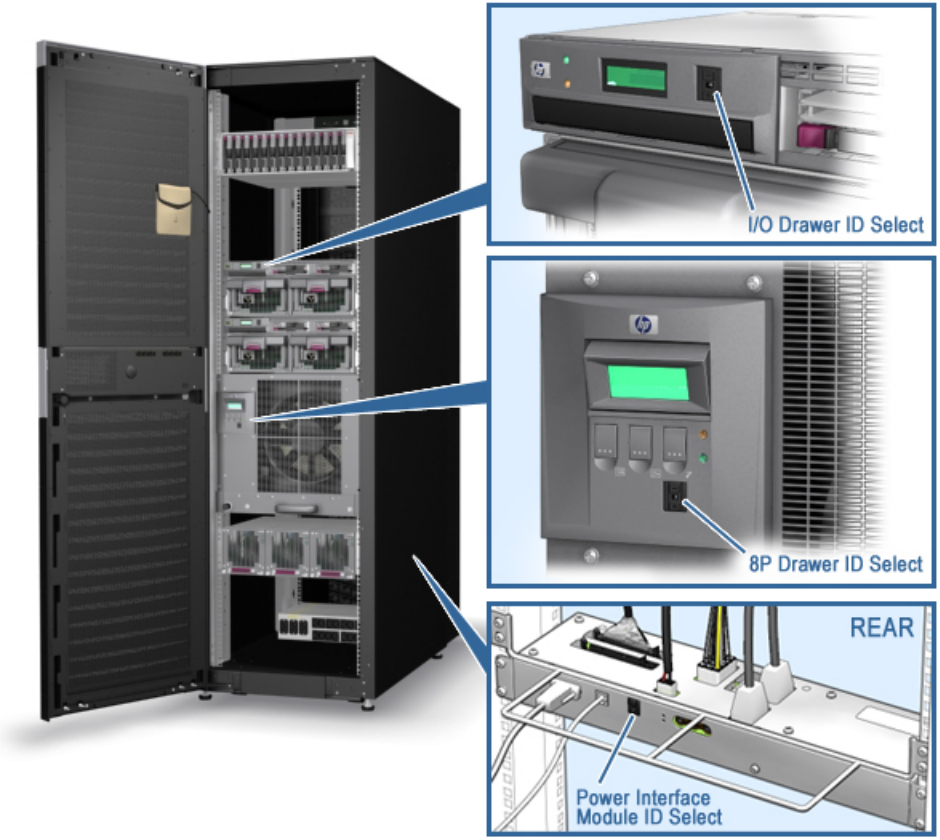

3.7 Reconfigure and Verify the System

At the MBM prompt enter this command:

```
MBM> set membership auto
```

See Chapter 6 for the verification procedure.

Chapter 4
Side-by-Side Model 16 to Model 32 Upgrade

This chapter contains the procedure for combining two Model 16 systems into one Model 32. Sections in this chapter are:

- Upgrade Kit
- Join the System Cabinets
- Remove Loopback Modules
- Install the Interprocessor Cables
- Connect the NAT Boxes
- Set the ID Switches
- Reconfigure and Verify the System

4.1 Upgrade Kit

The part number for the side-by-side Model 16 to Model 32 upgrade kit is 3X–BNPSB–03. Its contents are listed in Table 4–1.

Table 4–1 Side-by-Side Model 16 to Model 32 Upgrade Kit

Quantity	Part Number	Description
4	17–05019–03	Interprocessor cables (cabinet-to-cabinet)
1	17–04991–03	Ground cable
1	17–05097–01	Ethernet cable
2	128557–001	M5 self-tapping screws
1	EK–GS128–UP	This document

4.2 Join the System Cabinets

1. Position the cabinets. The two system cabinets must be next to each other.
2. Remove the side panels where the system cabinets will be joined (see Figure 4–1).
3. Open the front door.
4. Lift the cabinet top cover and remove.
5. Loosen the panel securing screw at the front bottom of the cabinet for the panel being removed.
6. Lift the panel up approximately 2 cm until it stops. Pull the panel from the frame and remove.
7. Tighten the panel securing screw.
8. Roll the cabinets as closely together as possible.
9. Align the front and rear edges of the cabinets.
10. Align the cabinet heights by adjusting the leveling feet (see Figure 4–2).
11. Join the cabinets with four screws as shown.
12. Connect the ground wire (128557–001) to both cabinets as shown in Figure 4–3, using the two M5 self-tapping screws. The ground wire should be attached to each cabinet at the right rear rail (as viewed from the front).

Figure 4–1 Removing the Cabinet Side Panels

Figure 4–2 Joining the System Cabinets

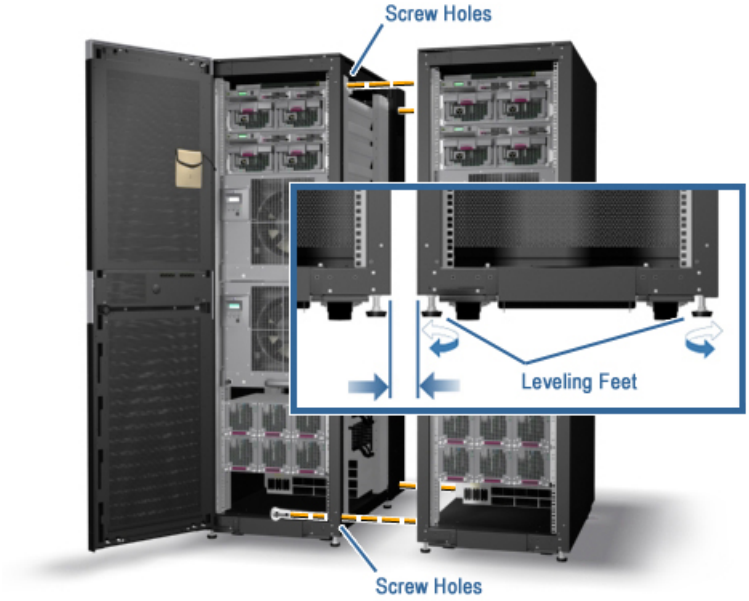

Figure 4–3 Attaching the Ground Wire

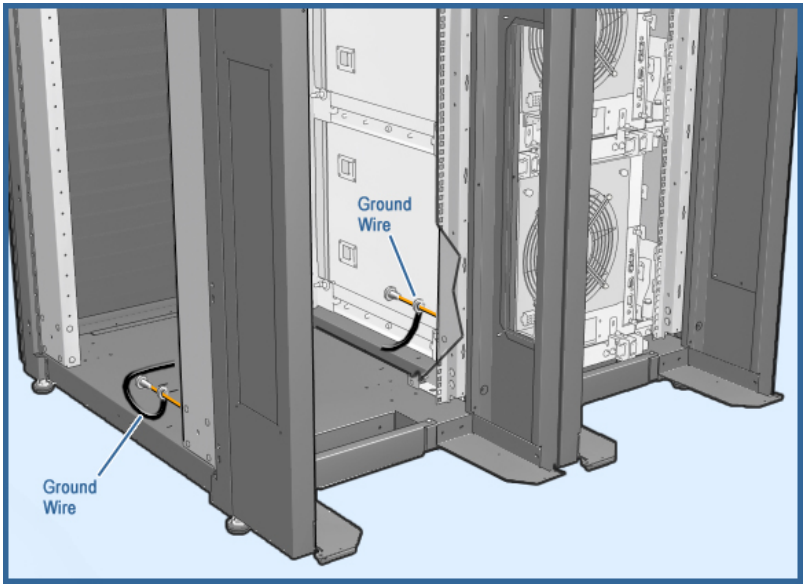

4.3 Remove Loopback Modules

Remove the loopback modules from the East-West connectors on all 8P drawers. See Figure 4–4.

1. Disconnect the cables from the North (4, 6) and South (5, 7) connectors if working on the top drawer, or from the North (0, 2) and South (1, 3) connectors if working on the bottom drawer. See Figure 4–5 for connector locations.
2. Loosen the captive screw on the cover and remove the cover.
3. Pull the levers on the loopback module apart and remove the module.
4. Remove the loopback module housing by removing the four screws. Save the screws.

Figure 4–4 Removing Loopback Modules

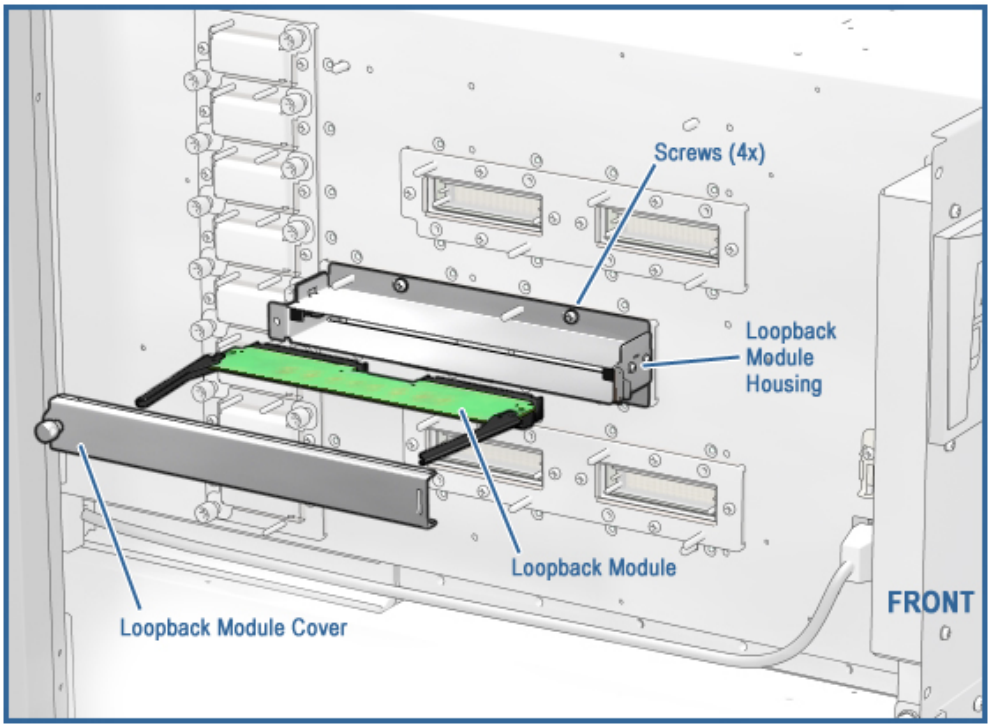

Figure 4–5 Interprocessor Cable Connectors

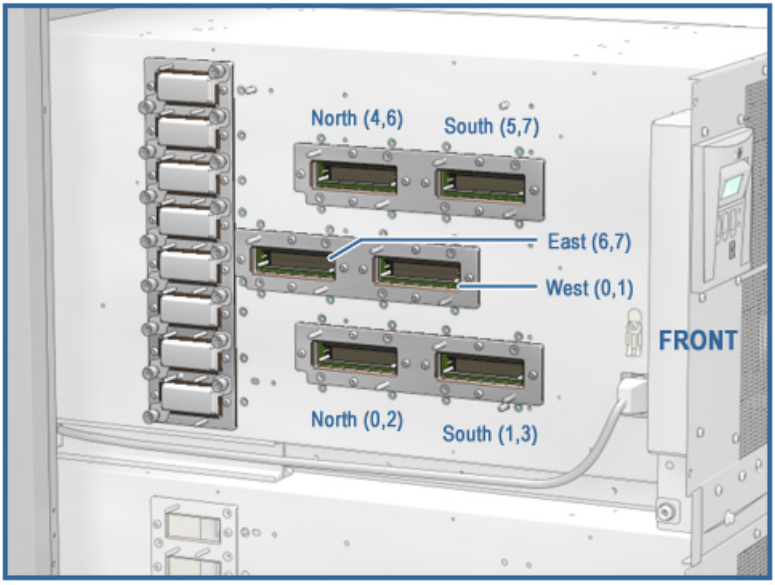

4.4 Install the Interprocessor Cables

1. Install the four IP cables in the East-West connectors of the two 8P drawers in the cabinet on the right (cabinet 0, drawers 0 and 1).
2. Slide the drawers into the cabinet, guiding the cables out the rear.
3. Loop each cable around the cable management bracket behind the drawer. The cables must lay in a neutral position and not be twisted on the tray. Make the loop large enough to almost reach the bottom of the drawer.
4. Pull the drawers out to test the size of the service loops. When they are sufficient, secure the cables to the cable management brackets with two cable ties on each.
5. Route the cables through the opening in the cabinet side and into the cabinet on the left.
6. Loop the cables around the cable management brackets.
7. If necessary, twist the cables to ensure a neutral loop and proper connector orientation.
8. Plug the cables into the connectors of the 8P drawers in cabinet 1. See Table 4–2.

Table 4–2 Interprocessor Cable Routing

From Cabinet 0 Connector	To Cabinet 1 Connector
Drawer 0 West 0, 1	Drawer 0 East 6, 7
Drawer 0 East 6, 7	Drawer 0 West 0, 1
Drawer 1 West 0, 1	Drawer 1 East 6, 7
Drawer 1 East 6, 7	Drawer 1 West 0, 1

Figure 4–6 Interprocessor Cable Routing

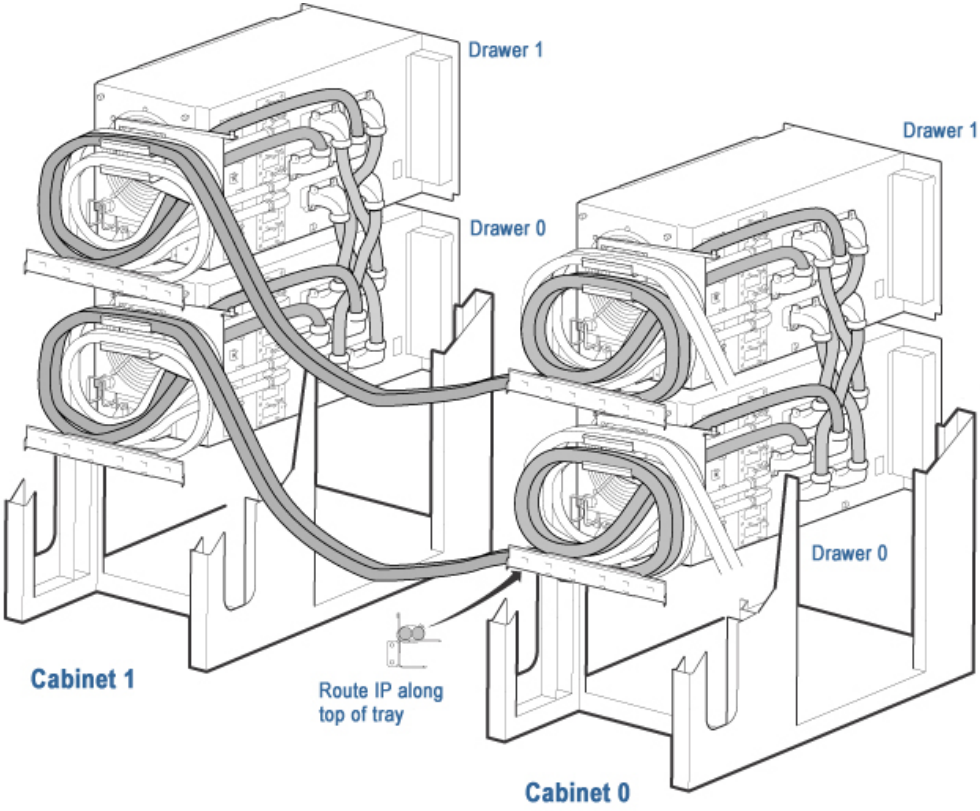

4.5 Connect the NAT Boxes

The internal LAN consists, in part, of the microprocessors on the MBM and PBM modules. This is accomplished by connecting the MBM and PBM in each cabinet to the NAT box in that cabinet and then connecting the NAT boxes to each other.

1. Reseat both ends of all cables between the NAT box in each cabinet and any destination.
2. Using the 39-inch network cable (17–05097–01), make a single connection between the NAT boxes in the two system cabinets. See Figure 4–8. If either of these NAT boxes has an uplink port, make the connection from that port to a LAN port in the other NAT box. Otherwise, connect the NAT boxes from LAN port to LAN port.

Figure 4–7 Connecting the NAT Boxes

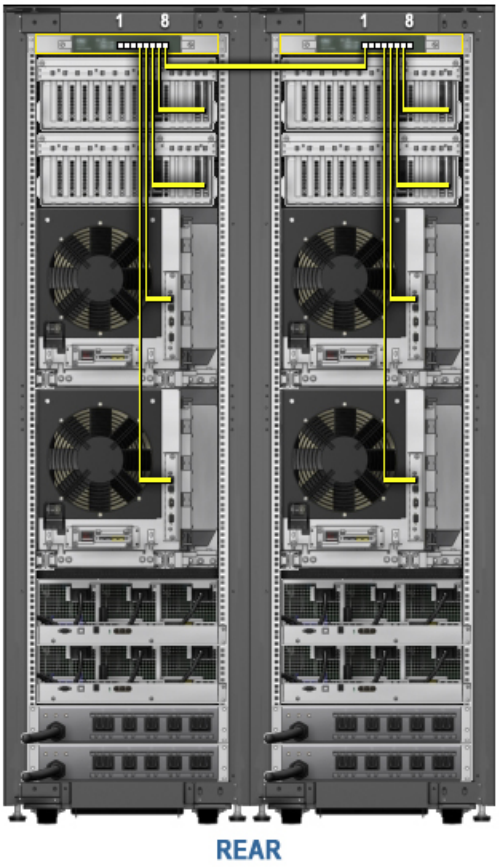

4.6 Set the ID Switches

Set both system cabinet ID switches to 0 (see Figure 4–8). Since the two system cabinets share an ID, each device in the two cabinets must have a unique ID. Set the four 8P drawers to 0, 1, 2, and 3, and set the IDs on the power subracks and I/O drawers to numbers between 4 and F (see Figure 4–9).

Figure 4–8 System Cabinet ID Switch

Figure 4–9 Device ID Switches

4.7 Reconfigure and Verify the System

At the MBM prompt enter this command:

```
MBM> set membership auto
```

See Chapter 6 for the verification procedure.

Chapter 5
Side-by-Side Model 32 to Model 64 Upgrade

This chapter contains the procedure for combining two Model 32 systems into one Model 64. Sections in this chapter are:

- Upgrade Kit
- Join the System Cabinets
- Install the Interprocessor Cables
- Connect the NAT Boxes
- Set the ID Switches
- Reconfigure and Verify the System

5.1 Upgrade Kit

The part number for the side-by-side Model 32 to Model 64 upgrade kit is 3X–BNPSB–04. Its contents are listed in Table 4–1.

Table 5–1 Side-by-Side Model 32 to Model 64 Upgrade Kit

Quantity	Part Number	Description
8	17–05019–03	Interprocessor cables (cabinet-to-cabinet)
1	17–04991–03	Ground cable
1	17–05097–01	Ethernet cable
2	128557–001	M5 self-tapping screws
1	EK–GS128–UP	This document

5.2 Join the System Cabinets

1. Position the cabinets. The two system cabinets must be next to each other.
2. Remove the side panels where the system cabinets will be joined (see Figure 5–1).
   a. Open the front door.
   b. Lift the cabinet top cover and remove.
   c. Loosen the panel securing screw at the front bottom of the cabinet for the panel being removed.
   d. Lift the panel up approximately 2 cm until it stops. Pull the panel from the frame and remove.
   e. Tighten the panel securing screw.
3. Roll the cabinets as closely together as possible.
4. Align the front and rear edges of the cabinets.
5. Align the cabinet heights by adjusting the leveling feet (see Figure 5–2).
6. Join the cabinets with four screws as shown.
7. Connect the ground wire (128557–001) to both cabinets as shown in Figure 5–3, using the two M5 self-tapping screws. The ground wire should be attached to each cabinet at the right rear rail (as viewed from the front).

Figure 5–1 Removing the Cabinet Side Panels

Figure 5–2 Joining the System Cabinets

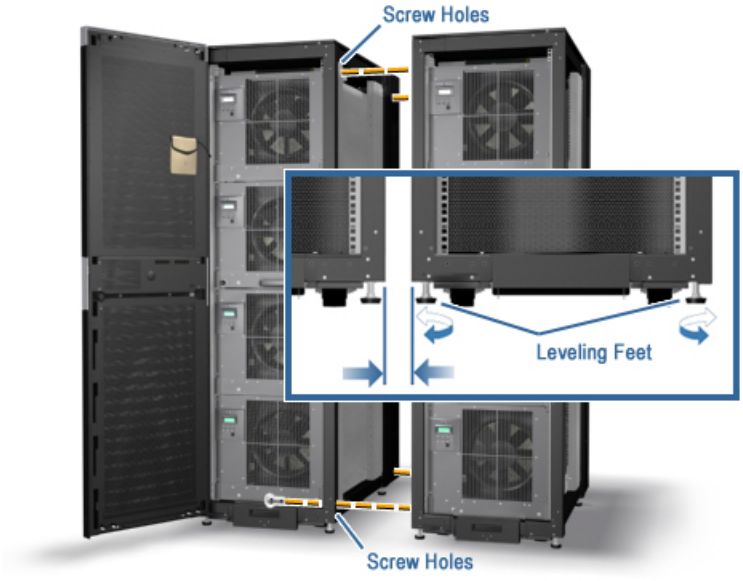

Figure 5–3 Attaching the Ground Wire

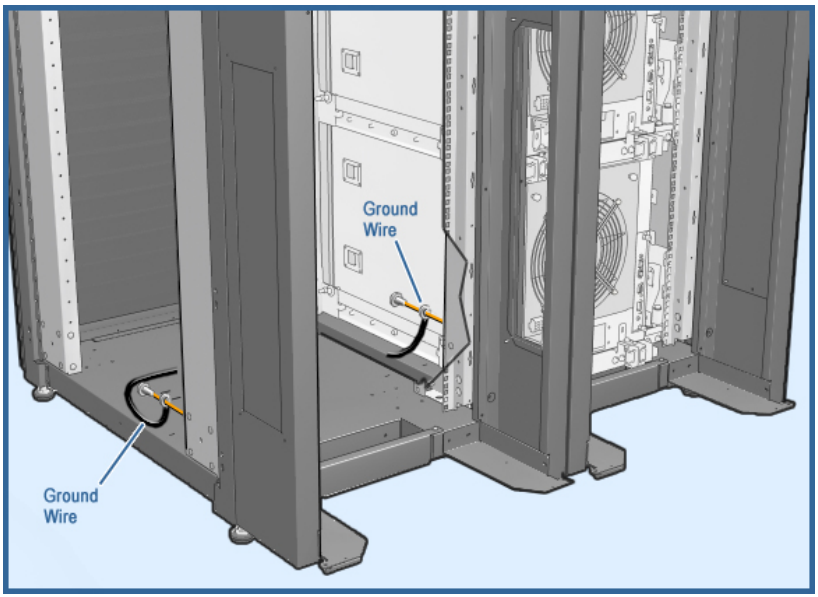

5.3 Install the Interprocessor Cables

Refer to Table 5–2 and Figure 5–4 to determine the location and order of installation of the eight IP cables that connect the 8P drawers in cabinet 0 to the 8P drawers in cabinet 1 and do the following:

1. Remove the IP cables from the box they come in and lay them out as straight as possible on the floor.
2. Using Table 5–2, label each end of the cables with the location of its connection to a particular CPU IP port.
3. Pull out the drawers in system cabinet 0 and 1.
4. Beginning with cable #1, attach the end marked D3 South 1, 3 to its CPU IP port on the side of drawer 3. If there is a cable already attached to this connector, you must remove it.
5. Tie wrap the cable to the back of the drawer.
6. Put a 180 degree clockwise twist in the cable and lay it on the lower tray of the cable pivot arm. Tie wrap the cable so it keeps its twist.
7. Test that when you push the drawers back into the cabinet, the cable pivot arm pivots and a controlled service loop is created.
8. Place the cable onto the top channel of the cable management bar at the rear of the cabinet and thread it into system cabinet 1.
9. Connect the other end to the CPU IP port on the side of drawer 3 in cabinet 1.
10. Tie wrap the cable to the back of the drawer.
11. Repeat step 6 on this end of the cable.
12. Test that when you push the drawers back into the cabinet, the cable pivot arm pivots and a controlled service loop is created.
13. Repeat steps 4 through 12 for each cable, changing the specific connections to CPU IP ports appropriately.
14. Dress each cable - in particular tie wrap the cables to the cable management bar in system cabinet 0.

Table 5–2 Interprocessor Cable Routing

Cable #	From Cabinet 0		To Cabinet 1	
	Drawer	Label	Drawer	Label
1	3	From C0, D3 South 1, 3	2	To C1, D2 North 0, 2
2	3	From C0, D3 South 5, 7	2	To C1, D2 North 4, 6
3	2	From C0, D2 North 0, 2	3	To C1, D3 South 1, 3
4	2	From C0, D2 North 4, 6	3	To C1, D3 South 5, 7
5	1	From C0, D1 South 1, 3	0	To C1, D0 North 0, 2
6	1	From C0, D1 South 5, 7	0	To C1, D0 North 4, 6
7	0	From C0, D0 North 0, 2	1	To C1, D1 South 1, 3
8	0	From C0, D0 North 4, 6	1	To C1, D1 South 5, 7

Figure 5–4 Interprocessor Cable Routing

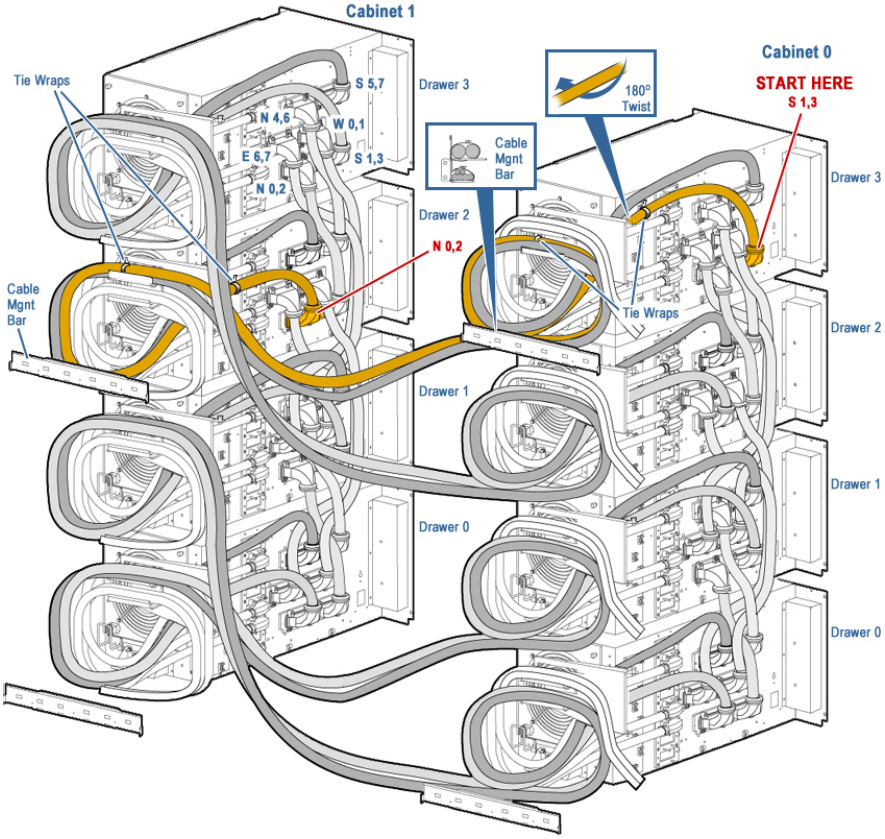

5.4 Connect the NAT Boxes

The internal LAN consists, in part, of the microprocessors on the MBM and PBM modules. This is accomplished by connecting the MBM and PBM in each cabinet to the NAT box in that cabinet and then connecting the NAT boxes to each other.

1. Reseat both ends of all cables between the NAT box in each cabinet and any destination.
2. Using the 39-inch network cable (17–05097–01), make a single connection between the NAT boxes in the two system cabinets, as shown in Figure 5–5. If either of these NAT boxes has an uplink port, make the connection from that port to a LAN port in the other NAT box. Otherwise, connect the NAT boxes from LAN port to LAN port.

Figure 5–5 Connecting the NAT Boxes

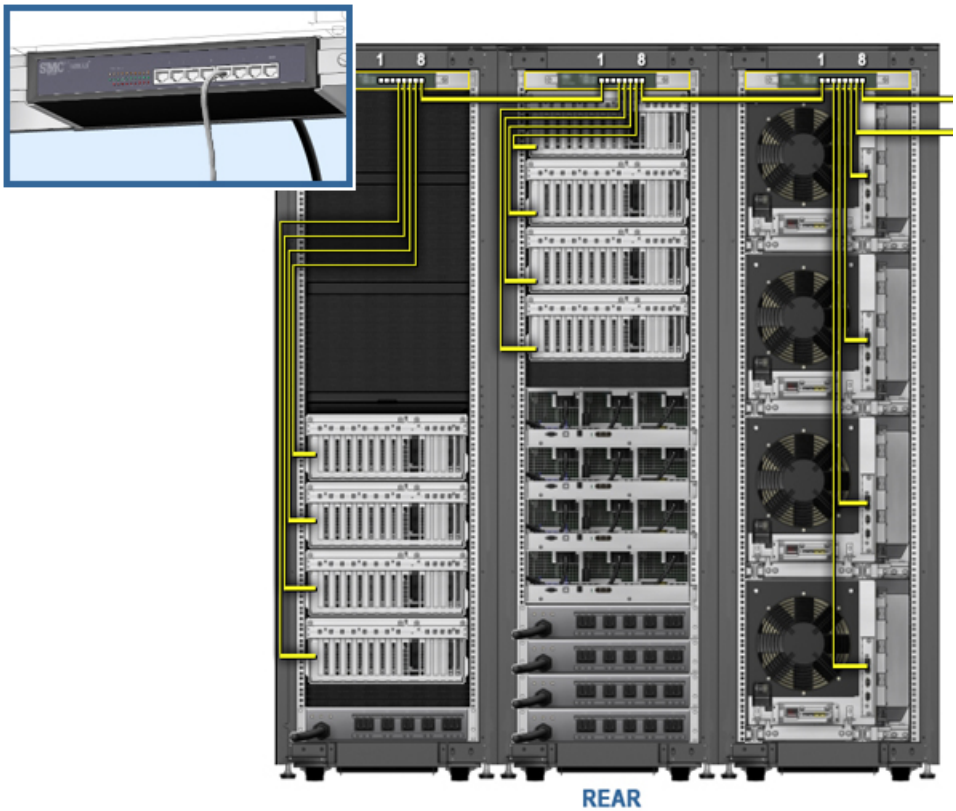

5.5 Set the ID Switches

Set the ID switch of cabinet 0 to 0 and the ID switch of cabinet 1 to 1 (see Figure 5–6). In each cabinet, set the four 8P drawers to 0, 1, 2, and 3 (starting at the bottom), and set the IDs on the power subracks and I/O drawers to numbers between 4 and F (see Figure 5–7).

Figure 5–6 System Cabinet ID Switch

Figure 5–7 Device ID Switches

5.6 Reconfigure and Verify the System

At the MBM prompt enter this command:

```
MBM> set membership auto
```

See Chapter 6 for the verification procedure.

Chapter 6
Verification Procedure

Q-Vet is used to verify the installation. Sections in this chapter are:

- Q-Vet Installation Verification
- Installing Q-Vet
- Running Q-Vet
- Reviewing Results of the Q-Vet Run
- De-Installing Q-Vet
- Q-Vet Resources

6.1 Q-Vet Installation Verification

CAUTION: Misuse of Q-Vet may result in loss of customer data. Customers are not authorized to access, download, or use Q-Vet. Q-Vet is used for system installation verification and during system development by Compaq engineers.

Q-Vet is a Qualification Verifier Exerciser Tool used to exercise systems under development. Run the latest released version of Q-Vet to verify that hardware is installed correctly and is operational. Q-Vet does not verify operating system or layered product configurations.

The latest Q-Vet release, information, Release Notes, and documentation are located at http://cisweb.mro.cpqcorp.net/projects/qvet/.

If the system is partitioned, Q-Vet must be installed and run separately on each partition. Since Compaq Analyze is used to view Q-Vet errors, it is useful to install it prior to running Q-Vet.

*CAUTION: **Do not** install the Digital System Verification Software (DECVET) on the system; use Q-Vet instead.*

IVP *Run ONLY IVP scripts on systems that contain customer data or any other devices that must not be overwritten. See the Q-Vet Disk Testing Policy Notice on the Q-Vet Web site for details. All Q-Vet IVP scripts use Read Only and/or File I/O to test hard drives. Floppy and tape drives are always write tested and should have scratch media installed.*

Non-IVP *Q-Vet scripts verify disk operation for some drives with "write enabled" techniques. These are intended for engineering and manufacturing test only.*

*Q-Vet **must** be de-installed upon completion of system verification.*

Swap or Pagefile Space

The system must have adequate swap space (on *Tru64 UNIX*) or pagefile space (on *OpenVMS*) for proper Q-Vet operation. You can set this up either before or after Q-Vet installation.

If during initialization Q-Vet determines that the system does not have enough swap/pagefile space, it will display a message indicating the minimum amount needed.

If you wish to address the swap/pagefile size before running Q-Vet, see the swap/pagefile estimates on the Q-Vet web site.

6.2 Installing Q-Vet

Install and run Q-Vet from the SYSTEM account on VMS or the root account on UNIX. Remember to install Q-Vet in each partition.

6.2.1 Tru64 UNIX

1. Make sure that there are no old Q-Vet or DECVET kits on the system by using the following command:
   ```
   setld -i | grep VET
   ```
   Note the names of any listed kits, such as OTKBASExxx etc., and remove the kits using **qvet_uninstall** if possible. Otherwise use the command
   ```
   setld -d kit1_name kit2_name kit3_name
   ```
2. Copy the kit tar file (*QVET_Vxxx.tar*) to your system.
3. Be sure that there is no directory named output. If there is, move to another directory or remove the output directory.
   ```
   rm -r output
   ```
4. Untar the kit with the command
   ```
   tar xvf QVET_Vxxx.tar
   ```

Note: The case of the file name may be different depending upon how it was stored on the system. Also, you may need to enclose the file name in quotation marks if a semi-colon is used.

---

5. Install the kit with the command
   ```
   setld -l output
   ```
6. During the install, if you intend to use the GUI you must select the optional GUI subset (QVETXOSFxxx).
7. The Q-Vet installation will size your system for devices and memory. It also runs **qvet_tune**. You should answer '**y**' to the questions that are asked about setting parameters. If you do not, Q-Vet will not install and the Q-Vet kit will be deleted.
8. After the installation completes, you should delete the output directory with `rm -r output`. You can also delete the kit tar file, **QVET_Vxxx.tar**.

9. You *must* reboot the system before starting Q-Vet.
10. On reboot you can start Q-Vet GUI via `vet&` or you can run non GUI (command line) via `vet -nw`.

6.2.2 OpenVMS

1. Delete any *QVETAXPxxx.A* or *QVETAXPxxx.EXE* file from the current directory.
2. Copy the self-extracting kit image file (*QVETAXPxxx.EXE*) to the current directory.
3. We recommend, but do not require, that you purge the system disk before installing Q-Vet. This will free up space that may be needed for pagefile expansion during the AUTOGEN phase. The command is
   `$purge sys$sysdevice:[*…]*.*`
4. Extract the kit saveset with the command: `$run QVETAXPxxx.EXE` and verify that the kit saveset was extracted by checking for the "Successful decompression" message.
5. Use `@sys$update:vmsinstal` for the Q-Vet installation. The installation will size the system for CPUs, IO devices and memory. If you *do not* intend to use the GUI, you can answer `no` to the question "Do you want to install Q-Vet with the DECwindows Motif interface?" Otherwise choose all the default answers during the Q-Vet installation. Q-Vet installation will verify, tune the system, and reboot.
6. After the installation completes you should delete the *QVETAXP0xx.A* file and the *QVETAXPxxx.EXE* file.
7. On reboot you can start Q-Vet GUI via `$vet` or the command interface via `$vet/int=char`.

6.3 Running Q-Vet

Run Q-Vet on each partition in the system.

We recommend that you review the Special Notices and the Testing Notes section of the Release Notes located at http://cisweb.mro.cpqcorp.net/projects/qvet/ before running Q-Vet.

Follow the instructions listed for your operating system to run Q-Vet in each partition.

6.3.1 Tru64 UNIX

Graphical Interface	From the Main Menu, select **IVP**, **Load Script** and select **Long IVP** (the IVP tests will then load into the Q-Vet process window). Click the **Start All** button to begin IVP testing.

Command-Line Interface	`> vet -nw`
	`Q-Vet_setup> execute .Ivp.scp`
	`Q-Vet_setup> start`
	
	Note that there is a "**.**" in front of the script name, and that commands are case sensitive.

6.3.2 OpenVMS

Graphical Interface	From the Main Menu, select **IVP**, **Load Script** and select **Long IVP** (the IVP tests will then load into the Q-Vet process window). Click the **Start All** button to begin IVP testing.

Command-Line Interface	`$ vet /int=char`
	`Q-Vet_setup> execute ivp.vms`
	`Q-Vet_setup> start`
	
	Note that commands are case sensitive.

NOTE: A short IVP script is provided for a simple verification of device setup. To run the short script, select the appropriate file, ***.Ivp_short.scp or ivp_short.vms*** *from the GUI IVP menu. This script will run for 15 minutes and then terminate with a summary log. The short script may be run as a preliminary to but not in place of the long IVP script, which is the full IVP test.*

The long IVP will run a "cycle of testing", i.e. until the slowest device has completed one pass of all tests (typically four or five hours).

Optionally, you can increase the IVP long run time by increasing the **cyclecount** (three passes are recommended). Two of the ways to do this are described. If you wish to know more about Q-Vet features like this, see

the training course at http://learning1.americas.cpqcorp.net/wbt/cs127a-ewb/welcome.htm.

1. After executing (loading) the IVP long script, issue the Q-Vet command **set cyclecount** x, where x is the number of cycles desired.
2. If you have the GUI, simply go to the menu item Options >Cyclecount and change the setting.

6.4 Reviewing Results of the Q-Vet Run

After running Q-Vet, check the results by reviewing the summary log.

Q-Vet will run all exercisers until the slowest device has completed one full pass. Depending on the size of the system, this will typically take two to 12 hours. Q-Vet will then terminate testing and produce a summary log. The termination message will tell you the name and location of this file.

All exerciser processes can also be manually terminated with the Suspend and Terminate buttons (**stop** and **terminate** commands).

After all exercisers report "Idle," the summary log is produced containing Q-Vet specific results and statuses.

- If there are no Q-Vet errors, no system error events, and testing ran to specified completion, the following message will be displayed:

  Q-Vet Tests Complete: Passed

- Otherwise, a message will indicate:

  Q-Vet Tests Complete: Fail

Run Compaq Analyze to review test results. The IVP scripts do not translate events unless they are Q-Vet detected errors. The testing times (for use with Compaq Analyze) are printed to the Q-Vet run window and are available in the summary log.

6.5 De-Installing Q-Vet

De-installation of Q-Vet differ between operating systems. And you must de-install Q-Vet from each partition in the system. Failure to do so may result in the loss of customer data at a later date if Q-Vet is misused.

Follow the instructions listed under your operating system to de-install Q-Vet from a partition. The **qvet_uninstall** programs will remove the Q-Vet

supplied tools and restore the original system tuning/configuration settings.

6.5.1 Tru64 UNIX

1. Command Q-Vet to Stop, Terminate, and Exit.
2. Execute the command `qvet_uninstall` which will remove Q-Vet and restore the system configuration/tuning file *sysconfigtab*.
3. Note: log files are retained in */usr/field/tool_logs*
4. Reboot the system. (You must reboot, even if you decide to reinstall Q-Vet. If you do not reboot tuning configurations may not be set properly.)

6.5.2 OpenVMS

1. Command Q-Vet to Stop, Terminate, and Exit.
2. Execute the command `@sys$manager:qvet_uninstall`. This will remove Q-Vet and restore system tuning (modparams.dat) and the original UAF settings.

NOTE: Log files are retained in sys$specific:[sysmgr.tool_logs]

---

3. Reboot the system. (You must reboot even if you decide to reinstall Q-Vet. If you do not reboot tuning configurations may not be set properly.)

6.6 Q-Vet Resources

Release notes and kits are available from the Q-Vet web page:
http://cisweb.mro.cpqcorp.net/projects/qvet/

Training may be found at:
http://learning1.americas.cpqcorp.net/wbt/cs127a-ewb/welcome.htm

A description of the IVP may be found at:
http://cisweb.mro.cpqcorp.net/projects/qvet/IVP_description.html

Index

8

8P drawer, 2–26
  installing, 2–35

C

Cabinets, joining, 3–3, 4–3, 5–3
Cables
  I/O, 2–49
  interprocessor, 2–47, 3–8, 4–6, 4–8, 5–6
  OCP, 2–57
  power cords, 2–58
Cage nuts, installing, 1–5
CPU modules
  installing, 2–55
  upgrading, 2–1

F

Filler modules, installing, 2–55

G

Ground rail location, 1–3

I

I/O cables, 2–49
I/O drawer
  removing, 2–11
  replacing, 2–15
ID switches, 2–59, 3–13, 4–12, 5–10
Interprocessor cables
  installing, 2–47, 3–8, 4–8, 5–6
  removing, 4–6

L

Loopback module
  installing, 2–46
  removing, 2–45, 3–6

M

Memory modules
  installing, 2–53
  upgrading, 2–1
Model 16 to Model 32 upgrade kit, 4–2
Model 32 to Model 64 upgrade kit, 5–2
Model 8 to Model 16 upgrade kit, 2–3, 3–2

O

OCP cables, 2–57

P

Pagefile space, 6–2
Power cords, 2–58
Power distribution unit, 2–21

Q

Q-Vet, 6–1
  deinstalling, OpenVMS, 6–7
  deinstalling, Tru64 UNIX, 6–7
  installation verification, 6–2
  installing, OpenVMS, 6–4
  installing, Tru64 UNIX, 6–3
  resources, 6–7
  reviewing results of run, 6–6
  running on OpenVMS, 6–5
  running on Tru64 UNIX, 6–5

R

Rail hole numbering, 1–4
RIMMs

installing, 2–53

S

Storage shelf, 2–9
Swap space, 6–2
System verification, 6–1

T

Torque requirements, 1–2

U

Upgrade kit
in-cabinet Model 8 to Model 16, 2–3
side-by-side Model 16 to Model 32, 4–2
side-by-side Model 32 to Model 64, 5–2
side-by-side Model 8 to Model 16, 3–2
Upgrading CPU modules, 2–1
Upgrading memory modules, 2–1

V

Verification procedure, 6–1