CRAY T3E AC Upgrade Guide

HMU-165-0

Last modified: December 1996

MAIN TABLE OF CONTENTS

Introduction **13**

Adding Cabinets – Part 1: Installation and Internal Wiring **21**

Adding Cabinets – Part 2: After Internal Wiring **111**

Adding PEMs **151**

Appendixes **225**

Record of Revision 11

Introduction **13**

Training Requirements 14
Before You Start 15
Part Numbers 15
Related Documents 16
Terminology 16
Safety Information 17
ESD Precautions 17
ESD Smock 17

Wrist Strap 18
Safety Precautions 18

Adding Cabinets – Part 1: Installation and Internal Wiring 21

Overview 23
Tools Required 23
Estimated Time to Complete the Mechanical Upgrade 24
Preinstallation Activities 25
Check the Power Cord Receptacles 27
Power Wiring for High-leakage Current 29
Unload the Computer Equipment 30
Inspect the Shipping Crates 34
Transport the New Cabinets to the Designated Location 34
Unpack the CRAY T3E AC Cabinets 36
Unpacking a Crate that Contains Two or Three Cabinets 44
Connect the Cabinets 51
Position the New Cabinets Temporarily 53
Remove Doors 54
Remove the Blower Exhaust Shields 56
Remove Wire-duct Covers 58
Remove the Right Side Panel from the Existing System 60
Attach Cable Troughs 62
Bolt the Cabinets Together 63
Open the Cable Ducts 66
Ground the Cabinets 68
Prepare the Rails for Wire Insertion 69
Remove Slot Plugs 72
Remove Rail Connectors 73
Remove Connector Pin Locks 76
Complete the Internal Wiring 77
Complete the Clock Connections 79
Complete the Boundary Scan Connections 86

Connect the Point-to-point Wires – When You Add a Fourth Cabinet 87
Connect the 4-pin Edge-to-Pigtail Cables – P/N 15237701 89
Connect the Daisy Chain 93
Reconnect Cable 15237601 (TDOF[0] < TDOM) 95
Connect Cabinet 3 to the Scan Master 98
Reconnect the Jumper Wire (REPEATI < TDOM) 101
Reinstall the Connectors in the Top Clock Rail 104
Rewire the Torus 106

Adding Cabinets – Part 2: After Internal Wiring 111

Close the Cable Ducts, Install the Modules and Side Panel 113
Close the Cable Ducts 113
Install the Side Trim 116
Verify the CRAY T3E AC Hardware 118
Verify the Voltage Selector Switch 119
Connect the Optional Customer Alarm 120
Verify the Control System Hardware 123
Verify Additional Power Hardware 125
Verify that the Modules Are Seated and Cammed 126
Complete the System Cabling 127
Cable Labels 128
Connect the WACS 129
Connect the GigaRing Cables 130
Connect Input Power to the Cabinets 134
Verify Cabinet Operation 135
Verify Operation of the Blower 136
Verify Operation of the Thermistors 136
Verify Cabinet Power Switch and Shunt Trip Operation 136
Verify Remote Alarm Operation (Optional) 137
Power Up the Modules 137
Verify Remote Power On/Off 138
Update the Configuration, Run Boundary Scan, and Run Diagnostics 139

Install the Panels and Doors 147
Install the Doors 148
Conclusion (Operating System Changes) 149

Adding PEMs 151

Overview 153
Upgrade Materials 154
Tools Required 155
Estimated Time to Complete the Mechanical Upgrade 155
Insert Clock Wires in the New PEM Rails 156
Prepare the System for the Upgrade 162
Remove Power from the CRAY T3E Cabinets 163
Remove the Rear Door(s) 164
Remove Access Panels 165
Open the Cable Ducts 167
Remove Clock and Logic Modules 169
Prepare the Top Clock Rail for Wire Insertion 172
Remove the Slot Plugs 172
Remove Clock Connectors zae – zah 173
Remove the Slot Covers 176
Install the Rails 177
Install the Top PEM Rails 179
Install the Bottom PEM Rails 182
Cable the System 183
Connect the Clock Wires 184
Connect the Boundary Scan Wires 190
Overview 190
Connect the 4-pin Edge-to-Pigtail Cables – P/N 15237701 191
Reconnect Cable 15237601 (TDOF[0] < TDOM) 194
Reconnect the Jumper Wire (REPEATI < TDOM) 196
Connect New PEMs to the Daisy Chain (TDOM/TDIM) 198
Reinstall the Connectors in the Top Clock Rail 200

Connect the PEM-to-WACS Cables 202
Rewire the Torus 203
Connect the PEM-to-bulkhead GigaRing Cables 208
Connect the External GigaRing Cables 209
Close the Cable Ducts 209
Install the Modules and Power Supplies 210
Check System Function 213
Check Module Power and Control 213
Update the Configuration, Run Boundary Scan, and Run Diagnostics 214
Install Panels and Doors 222
Install the Doors 223
Conclusion (Operating System Changes) 224

Appendixes 225

Appendix A – Wire Removal 225
Appendix B – Removing Original Cabinets 228
Removing a 1-, 2-, or 3-cabinet System as a Single Unit 228
Disconnecting One or More Cabinets from Other CRAY T3E Cabinets 230
Appendix C – Example Upgrade Specification 232

Figures

Figure 1. CRAY T3E AC Cabinet Layout 26
Figure 2. Cabinet Floor Plan 26
Figure 3. Power Plugs and Receptacles 29
Figure 4. Single-cabinet Shipping Configuration 31
Figure 5. Two-cabinet Shipping Configuration 32
Figure 6. Three-cabinet Shipping Configuration 33
Figure 7. Cabinet Shipping Crate 37
Figure 8. Retaining Block and Screws 38
Figure 9. Installing the Ramp 39
Figure 10. Cardboard Shipping Container 40
Figure 11. Removing the Inside Retaining Bar 41

Figure 12. Shipping Bolts 42
Figure 13. Remove the Four Blocks 45
Figure 14. Remove the Bumpers 45
Figure 15. Place the Blocks beneath the Corner Levelers 46
Figure 16. Lower the Cabinets onto the Blocks and Remove the Lifts . . 46
Figure 17. Remove the Straps 47
Figure 18. Remove the Cardboard Lid and Panels 47
Figure 19. Remove the Four Shipping Bolts 48
Figure 20. Remove the Pallet 48
Figure 21. Remove the Blocks 49
Figure 22. Lower the Cabinets to the Floor 49
Figure 23. Front Door 51
Figure 24. Temporary Cabinet Positions – Example 53
Figure 25. Access Panel Locations 57
Figure 26. Frame-bolt Holes and Wire-duct Locations 59
Figure 27. Remove the Right Side Panel 60
Figure 28. Cable Troughs 62
Figure 29. Six-cabinet System 63
Figure 30. Frame-joiner Bolt Locations 64
Figure 31. Frame-joiner Bolts 65
Figure 32. Intercabinet Cable Ducts 67
Figure 33. Chassis Ground Connections (Rear View of Cabinet) 68
Figure 34. Module Camming 70
Figure 35. Module Setscrew Locations (Rear View of Cabinet) 71
Figure 36. Removing Plugs from the Top Clock Rail 72
Figure 37. Loosening the Wires 73
Figure 38. Clock Connector Locations 74
Figure 39. Removing Clock Rail Connectors 75
Figure 40. Connector Locations – Bottom Clock Rail 75
Figure 41. Removing a Connector Spring 76
Figure 42. Removing a Connector Pin Lock 76

Figure 43. Example – Clock Wire Labels 80
Figure 44. Clock Connections 81
Figure 45. System and GigaRing Clock Wire Connections to Clock Rail 81
Figure 46. Pin Locations 83
Figure 47. 2-pin Connector Position 84
Figure 48. Wire Insertion 84
Figure 49. Wire Insertion with Wire Rod 85
Figure 50. Edge-to-edge Connection – P/N 15223701 87
Figure 51. Edge-to-edge Connection – P/N 15224009 87
Figure 52. Direct Boundary Scan Connections 88
Figure 53. Connecting the 4-pin Edge-to-Pigtail Cable 89
Figure 54. 4-pin Edge-to-pigtail Connections 90
Figure 55. 4-pin Edge-to-Pigtail Cable – P/N 15237701 91
Figure 56. TDOM > TDIM Daisy Chain Connection – Between Cabinets 93
Figure 57. Reconnecting Cable 15237601 – Upgrade to Three Cabinets . 96
Figure 58. 2-position Socket, Edge-to-Pigtail Cable – P/N 15237601 . . . 97
Figure 59. Boundary Scan Connections to Cabinet 3, Slot 1 98
Figure 60. 2-position Pin, Edge-to-Pigtail Cable – P/N 15237801 99
Figure 61. 2-position Socket, Edge-to-Pigtail Cable – P/N 15237601 . . . 100
Figure 62. Reconnecting the Jumper Wire to Cabinet 5 or 6 101
Figure 63. Scan Jumper/Intermediate Connection – P/N 15223802 102
Figure 64. Inserting and Seating a Plastic Connector Pin Lock 104
Figure 65. Installing Clock Rail Connectors 105
Figure 66. Example of Torus Connections 106
Figure 67. Connectors P2 and P3 – Torus Cable Assembly 107
Figure 68. Example Upgrade Specification (PE8 to PE12) – Y-side Only 108
Figure 69. Intercabinet Cable Ducts 113
Figure 70. Module Camming 115
Figure 71. Installing the Side Panel 117
Figure 72. CRAY T3E Cabinet Components -- Front View 118
Figure 73. Voltage Selector Switch (SW1) 119

Figure 74. Power-cord Cover and Power-box Cover (Removed) 120
Figure 75. Filter Bracket 121
Figure 76. Remote Alarm Contacts - Locations 122
Figure 77. WACS Front Panel 123
Figure 78. WACS with Front Panel Open 124
Figure 79. Power Supply Rack 125
Figure 80. Module Setscrew Locations (Rear View of Cabinet) 126
Figure 81. Typical System - Block Diagram 127
Figure 82. WACS Connector Location on I/O Bulkhead 129
Figure 83. I/O Bulkhead – Connector Locations 130
Figure 84. Example GigaRing Connections 131
Figure 85. GigaRing Connectors on PC-10 (Rear View) 132
Figure 86. NSR-1 GigaRing Connectors 133
Figure 87. MPN-1 GigaRing Connectors 133
Figure 88. WACS Summary Screen – Standby Mode 135
Figure 89. Power Supply Circuit Breakers and LEDs 138
Figure 90. T3EMS Main Window 140
Figure 91. System Configuration Window 141
Figure 92. PE Configuration Window 142
Figure 93. T3EMS Scan Tool Options Window 143
Figure 94. Load Program Window 144
Figure 95. Access Panel Locations 147
Figure 96. Example – Clock Wire Labels 156
Figure 97. Removing the Slot Plug 157
Figure 98. Removing a Connector Pin Lock 157
Figure 99. Clock Connections to PEM Rail 158
Figure 100. Inserting and Seating a Plastic Connector Pin Lock 159
Figure 101. Wire Insertion 160
Figure 102. Wire Insertion with Wire Rod 161
Figure 103. Access Panel Locations 166
Figure 104. Intercabinet Cable Duct Locations 167

Figure 105. Duct Seals (viewed from inside cabinet) 168
Figure 106. Module Camming 171
Figure 107. Module Setscrew Locations (Rear View of Cabinet) 171
Figure 108. Removing Plugs from the Top Clock Rail 172
Figure 109. Inserting Wires through Slot Plug 172
Figure 110. Loosening the Wires 173
Figure 111. Clock Connector Locations 174
Figure 112. Removing Clock Rail Connectors 174
Figure 113. Removing a Connector Spring 175
Figure 114. Removing a Connector Pin Lock 175
Figure 115. Slot Covers – Cutaway View of Card Cage 176
Figure 116. Power Supply Rails – Shoulder Screw Locations 177
Figure 117. PEM Rails – Cutaway View of Card Cage 179
Figure 118. Installing a Top PEM Rail – Side View 181
Figure 119. Example – Clock Wire Labels 184
Figure 120. Clock Connections 185
Figure 121. System and GigaRing Clock Wire Connections 186
Figure 122. Pin Locations 187
Figure 123. 2-pin Connector Position 187
Figure 124. Wire Insertion 188
Figure 125. Wire Insertion with Wire Rod 189
Figure 126. Connecting the 4-pin Edge-to-Pigtail Cable 191
Figure 127. 4-pin Edge-to-pigtail Connections 192
Figure 128. 4-pin Edge-to-Pigtail Cable – P/N 15237701 193
Figure 129. Reconnecting Cable 15237601 – Systems with 1, 2, or 3 Cabinets 194
Figure 130. 2-position Socket, Edge-to-Pigtail Cable – P/N 15237601 . . . 195
Figure 131. Reconnecting the Jumper Wire – Systems with 4 or More Cabinets 196
Figure 132. Scan Jumper/Intermediate Connection – P/N 15223802 197
Figure 133. TDOM > TDIM Daisy Chain Connections 198
Figure 134. Inserting and Seating a Plastic Connector Pin Lock 200

Figure 135. PEM-to-WACS Connections 202
Figure 136. Sample Torus Connections 203
Figure 137. Connectors P2 and P3 – Torus Cable Assembly 204
Figure 138. Example Upgrade Specification (PE8 to PE12) – Y-side Only 205
Figure 139. I/O Bulkhead – Connector Locations 208
Figure 140. Module Camming 212
Figure 141. T3EMS Main Window 215
Figure 142. System Configuration Window 216
Figure 143. PE Configuration Window 217
Figure 144. T3EMS Scan Tool Options Window 218
Figure 145. Load Program Window 219
Figure 146. Access Panel Locations 222
Figure 147. Connector Removal with Mechanical Pencil 226

Tables

Table 1. CRAY T3E AC Reference Documents 16
Table 2. Estimated Time to Complete the Upgrade 24
Table 3. Required Power Receptacle Test Readings 28
Table 4. Facility Power Requirements for each CRAY T3E AC Cabinet 28
Table 5. CRAY T3E AC Cabinet Shipping Specifications 35
Table 6. Wiring Overview 78
Table 7. Remote Alarm Contacts - Descriptions 122
Table 8. Bottom Scanner DIP Switch Functions 124
Table 9. Cable Labels 128
Table 10. Example Cable Label 128
Table 11. CRAY T3E AC I/O Bulkhead GigaRing Connections 130
Table 12. Offline Diagnostic Tests 146
Table 13. Slot Upgrade Materials 154
Table 14. Estimated Time to Complete the Upgrade 155
Table 15. Internal Wiring Overview 183
Table 16. PEM-to-Bulkhead GigaRing Connections 209
Table 17. Offline Diagnostic Tests 221

Record of Revision

December 1996

Original printing.

Introduction

“MAIN TABLE OF CONTENTS”

Contents: Introduction

Training Requirements 14
Before You Start 15
Part Numbers 15
Related Documents 16
Terminology 16
Safety Information 17
ESD Precautions 17
ESD Smock 17
Wrist Strap 18
Safety Precautions 18

These procedures are intended for Cray Research engineers to assist them with the mechanical upgrade of a CRAY T3E air-cooled (AC) system. Use this document in conjunction with the Engineering upgrade documentation that you receive with your upgrade materials.

This document is divided into four main sections: “Introduction,” “Adding Cabinets,” “Adding PEMs,” and “Appendixes.” This “Introduction” includes information on preliminary activities, related documentation, and safety.

“Adding Cabinets” provides procedures for adding new CRAY T3E AC cabinets to an existing system.

“Adding PEMs” provides procedures for adding additional processing element modules (PEMs) to an existing CRAY T3E AC cabinet.

The Appendixes contain a wire-removal procedure, a procedure for removing an old cabinet, and a sample Engineering upgrade specification.

Troubleshooting procedures are not within the scope of this document.

This document provides efficient sequences for the upgrades. You may deviate from the sequences as required; however, when possible, perform the procedures in the order shown.

The upgrade coordinator is responsible for CRUISE (Cray Research Unified System Enterprise) registration and for submitting reports on the upgrade.

NOTE: If you plan to install new PEMs in an existing cabinet plus install one or more *new* cabinets, complete all of the applicable procedures for adding PEMs and for adding cabinets and disregard redundant procedures.

Training Requirements

Cray Research personnel who perform these upgrades must have completed the T3EM training course. They should also have CRAY T3E wiring experience.

Before You Start

Do not start the upgrade until you do the following things:

- Read this upgrade guide, the Engineering upgrade specification, and any other upgrade-specific Engineering documentation.
- Ensure that the applicable personnel have reviewed the *UNICOS/mk Configuration Reference Manual*, SG-2603, and understand the software-related portions of the upgrade.
- Ensure that the site meets all applicable site planning requirements.
- Ensure that you have the required tools.
- Ensure that you have the correct ESD protective equipment.
- Ensure that you have all of the required upgrade parts and modules.
- Label the new wires and cables (you may also label the wires and cables during the upgrade).
- Ensure that each new module is free of cracks and debris. If a module has any defects, send it to central repair.
- Schedule sufficient time to perform the upgrade.

You should also consider the following things:

- If you install modules with a different memory capacity, you may need to reposition other modules that are already installed. You should know this configuration before you begin the upgrade.
- If you install modules with a different PE option speed, you may need to reposition other modules that are already installed. You should know this configuration before you begin the upgrade.

Part Numbers

Where possible, this document includes part numbers. The part numbers are subject to change without notice; refer to the packing lists if necessary to identify parts. In addition, be aware that hardware designs may also change, causing some portions of this document to be out-dated temporarily.

Related Documents

You should receive the *UNICOS/mk Configuration Reference Manual*, SG-2603, and an Engineering upgrade specification with your upgrade materials. The *UNICOS/mk Configuration Reference Manual* contains the operating system procedures that personnel must complete after you upgrade the hardware. The Engineering upgrade specification contains lists of the wires that you must disconnect and connect when you upgrade the hardware. Use the upgrade specification in combination with this document when you perform the upgrade.

The upgrade specifications are currently titled *T3E Air Cooled Module and Wire Reconfiguration.* The title also includes the size of the old system and of the upgraded system; for example, *AC6 (8PEs) -> AC16 (20 PEs*). Appendix C contains a copy of the *AC16 (20PEs) -> AC24 (28 PEs*) upgrade specification.

Engineering creates upgrade specifications as needed; therefore, most specification numbers had not been assigned when this document was published.

In addition to the documents noted above, the reference documents listed in Table 1 should be available on site.

Table 1. CRAY T3E AC Reference Documents

Document Number	Description
800502	Wire List, Interconnect Network, T3E Air Cooled
800513	Wire List, Boundary Scan, T3E Air Cooled
800514	Wire List, GigaRing AC
800569	Wire List, Clock, T3E Air Cooled
HMM-158	Introduction to Offline Diagnostics
HMM-166	AC System Cabling (CRAY T3E Air-cooled System)
HMM-168	AC Repair and Adjustment (CRAY T3E Air-cooled System)
HMM-360	Clock and Boundary Scan

Terminology

This document uses the following terms, which you should know:

pre-upgrade – Refers to the configuration that existed prior to the upgrade.

old – Refers to cabinets and/or PEMs in the pre-upgrade system.

new – Refers to cabinets and/or PEMs that you add to the system during the upgrade.

Safety Information

The following subsections contain important safety information that you must read and understand before you begin the upgrade.

Hazard Statements

When you read the upgrade procedures, be alert for hazard advisory statements. The following list describes the hazard statement signal words:

- **Danger** indicates an imminently hazardous situation that, if not avoided, will result in death or serious injury.
- **Warning** indicates a potentially hazardous situation that, if not avoided, could result in death or serious injury.
- **Caution** indicates a potentially hazardous situation that, if not avoided, may result in minor or moderate injury. This signal word is also used to alert personnel against unsafe practices that can result in equipment damage and/or data corruption.

ESD Precautions

Observe electrostatic discharge (ESD) precautions during the entire upgrade process. Required apparel includes an ESD smock, shoes, and wrist strap.

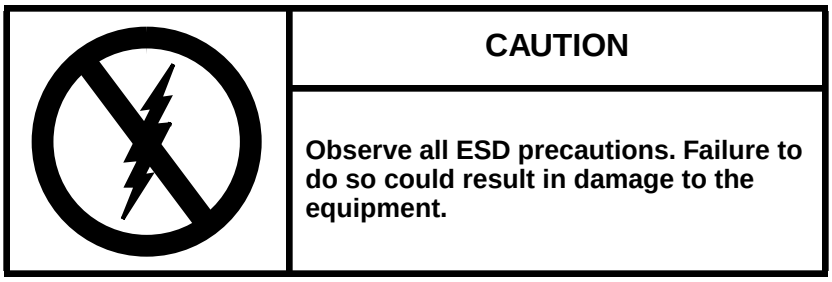

ESD Smock

Wear a Cray Research-approved static-dissipative smock when servicing or handling an ESD-sensitive device. Completely button the smock and wear it as the outermost layer of clothing. You must have a portion of the smock’s sleeves in direct contact with the skin of your arms. Skin contact is essential for a dissipative path-to-earth ground through your wrist strap. Tuck hair that exceeds shoulder length inside the back of the smock.

Wrist Strap

Wear a Cray Research-approved wrist strap when servicing or handling an ESD-sensitive device to eliminate possible ESD damage to equipment. Connect the wrist strap cord directly to earth ground.

NOTE: The CRAY T3E AC cabinet contains two sets of jacks (front and rear) for a mating ESD ground strap.

Safety Precautions

Before you perform the procedures in this document, take a few minutes to review the *Safety and ESD Guidelines*, publication number HGM-016. In addition, observe the following safety measures when installing, repairing, or maintaining the system.

- Use caution when removing the cabinets from the ramps. Moving these cabinets can cause personal injury or property damage if the cabinets are not handled properly.
- Ensure that the cabinet crates are positioned close to their final positions before you unpack them.
- Do not move the cabinets while they are connected to power.
- Do not wear watches or jewelry when you work on a CRAY T3E system cabinet.

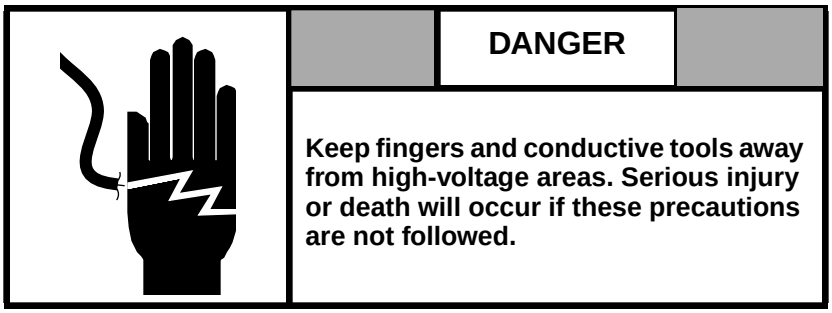

- Keep fingers and conductive tools away from high-voltage areas and from high-current areas.
- Ensure that a qualified electrician has properly installed the power receptacles.

- Set all circuit breakers to the OFF (0) position before you plug in the system power cord.
- Unplug, lock, and tag the cabinet power plug before you work on the power system components.

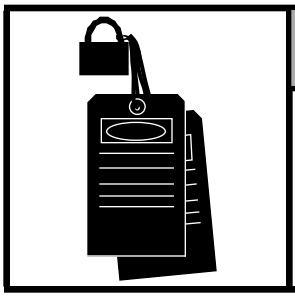

DANGER

Unplug, lock, and tag the AC cord. Failure to do so will result in damage to the equipment and serious injury or death to the maintenance person.

- Remove all tools from the system cabinets after you service them.
- Replace all covers and panels that you removed from the system during servicing.
- Power off the system only after the system software has been shut down in an orderly manner.

CAUTION

If you power off the system before you halt the operating system, you may lose system and customer files (data).

Adding Cabinets – Part1: Installation and Internal Wiring

Return to the “MAIN TABLE OF CONTENTS”

Contents: Adding Cabinets – Part 1

Overview 23

Tools Required 23

Estimated Time to Complete the Mechanical Upgrade 24

Preinstallation Activities 25

Check the Power Cord Receptacles 27

Power Wiring for High-leakage Current 29

Unload the Computer Equipment 30

Inspect the Shipping Crates 34

Transport the New Cabinets to the Designated Location 34

Unpack the CRAY T3E AC Cabinets 36

Unpacking a Crate that Contains Two or Three Cabinets 44

Connect the Cabinets 51

Position the New Cabinets Temporarily 53

Remove Doors 54

Remove the Blower Exhaust Shields 56

Remove Wire-duct Covers 58

Remove the Right Side Panel from the Existing System 60

Attach Cable Troughs 62

Bolt the Cabinets Together 63

Open the Cable Ducts 66

Ground the Cabinets 68

Prepare the Rails for Wire Insertion 69

Remove Slot Plugs 72
Remove Rail Connectors 73
Remove Connector Pin Locks 76
Complete the Internal Wiring 77
Complete the Clock Connections 79
Complete the Boundary Scan Connections 86
Connect the Point-to-point Wires – When You Add a Fourth Cabinet 87
Connect the 4-pin Edge-to-Pigtail Cables – P/N 15237701 89
Connect the Daisy Chain 93
Reconnect Cable 15237601 (TDOF[0] < TDOM) 95
Connect Cabinet 3 to the Scan Master 98
Reconnect the Jumper Wire (REPEATI < TDOM) 101
Reinstall the Connectors in the Top Clock Rail 104
Rewire the Torus 106

Overview

A cabinet upgrade consists of adding one or more CRAY T3E AC cabinets to an existing system. A cabinet upgrade includes the following tasks:

- Uncrating the new cabinet(s)
- Positioning the new cabinet(s)
- Preparing the cabinets
  - Removing doors and panels
  - Removing modules (for access)
  - Removing connectors from the clock rail(s)
  - Removing connectors from PEM rails, if applicable
- Connecting wires and cables
- Powering on the system initially
- Booting the system
- Checking system function (with boundary scan, diagnostics, etc.)

For efficiency, perform the procedures in the order that they are presented.

Tools Required

Ensure that you have the following tools, which are necessary to complete the hardware installation. These tools are available from Cray Research's Customer Service Logistics department or from any hand-tool vendor. (The Logistics part number for the CRAY T3E tool kit is 57247800.)

- Multimeter
- Cutters
- 11-mm, 15-mm, and 17-mm wrenches
- Adjustable wrench
- 0.5-in., 3-mm, and 4-mm hex (allen) wrenches with driver
- #1 and #2 Phillips screwdrivers
- Small and medium flatblade screwdrivers
- Flashlight
- Heat gun (optional)
- Wiring tools:
  - 0.3-mm mechanical pencil, with no lead (or a wire removal tool)
  - Dental pick
  - Hemostats, tweezers, or wire insertion tool (all optional)
- Camming tool

Estimated Time to Complete the Mechanical Upgrade

Table 2 divides the upgrade process into separate procedures. Use this table to estimate how much system time you should request to complete the upgrade. The times are estimates only; the time required for your upgrade will depend on several things, including your experience and the number of individuals who perform the upgrade.

Table 2. Estimated Time to Complete the Upgrade

Upgrade Task	Estimated Time Required
Unpacking and positioning new cabinets	0.5 hours per new cabinet
Bolting new cabinets to the old system	0.5 hours per new cabinet
Preparing the system for wiring	2 to 3 hours
Connecting the clock and boundary scan wiring	1 to 2 hours per new module
Rewiring the torus	2 to 6 hours
Updating the hardware information in T3EMS and testing the hardware	2 hours (under normal circumstances)
Installing access panels, doors, and trim	1 hour
Completing OS-related software tasks	Refer to the *UNICOS/mk Configuration Reference Manual*, SG-2603

Preinstallation Activities

Before you upgrade your system, read the following subsections and verify that your site meets all site requirements.

Check Site Planning Requirements

Before you add another cabinet to your CRAY T3E system, ensure that your site meets all of the site planning requirements included in *Preparing for a CRAY T3E Air-cooled System Installation*, Cray Research publication number HR-04118. For example, take some time to verify the following things:

- Verify that the site has appropriate means (pallet jacks, etc.) for unloading and transporting the system components.
- Verify that the route to the computer room is free of obstacles.
- Verify that the computer room floor is prepared according to the floor layout diagram for the system.
- Verify that floor cutouts are complete, correct, and free of sharp edges and burrs.
- Verify that all electrical services meet site planning specifications.
- Verify that the air-conditioning equipment meets site planning specifications.
- Verify that the ground clamps (for grounding the cabinets to the floor grid) are in the correct locations, near the floor cutouts for I/O cables.

Figure 1. CRAY T3E AC Cabinet Layout

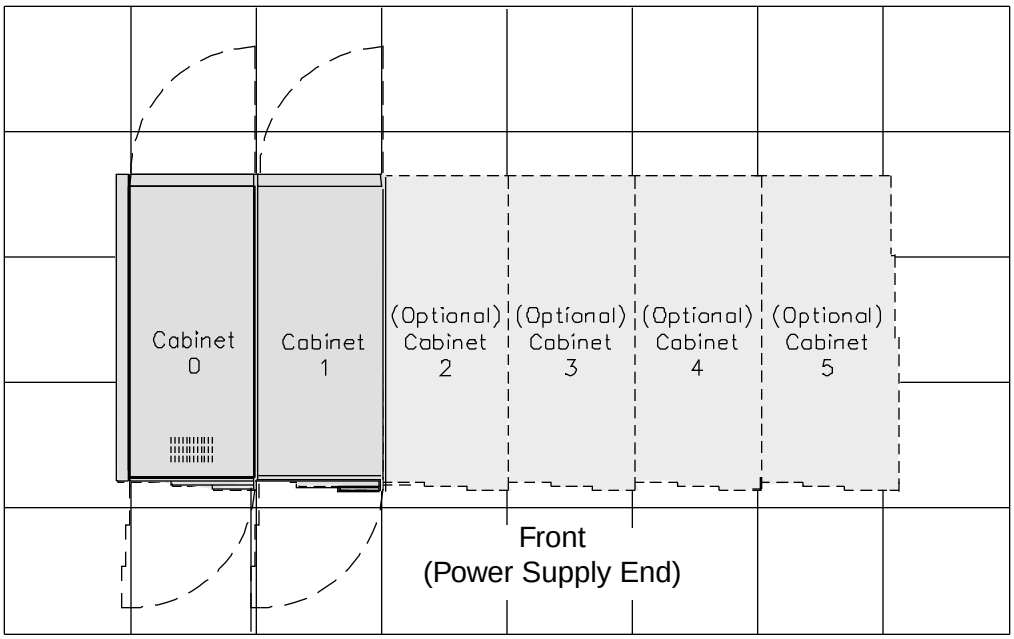

NOTE: The grids represent 24 in. X 24 in. (61 cm X 61 cm) floor tiles.

Figure 2. Cabinet Floor Plan

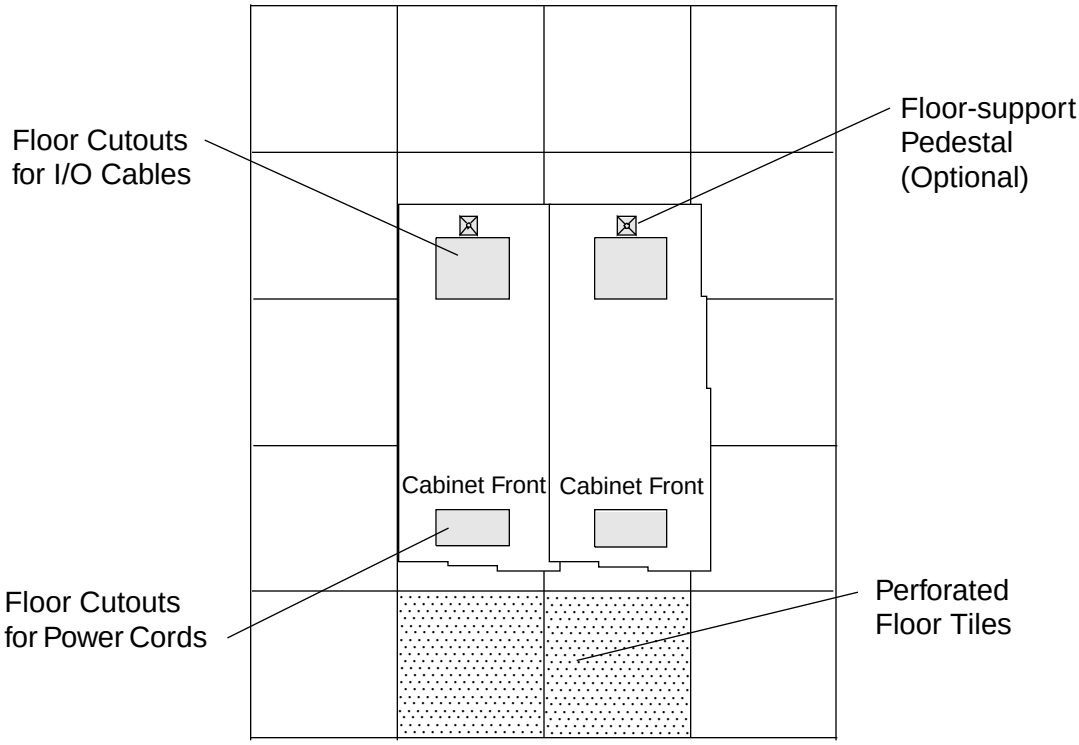

Check the Power Cord Receptacles

If you plan to add one or more cabinets to your CRAY T3E system, ensure that a qualified electrician installed the correct power receptacles according to site planning specifications. Cray Research-trained personnel should use the following procedure to ensure that the power receptacles are properly wired. Refer to Figure 3 for drawings of the 3-phase power plugs and receptacles that are available for CRAY T3E AC cabinets.

Perform the following procedure for each power cord receptacle that will support a CRAY T3E AC cabinet:

1. Turn off, lock, and tag the customer's circuit breaker(s) that control power for the CRAY T3E AC cabinet power receptacle before you perform Step 2 and Step 3.

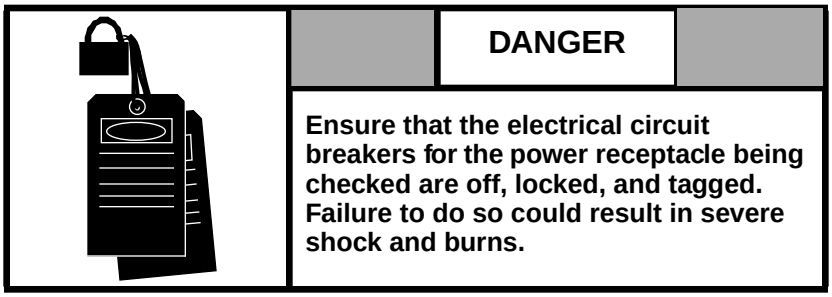

2. Set the multimeter to a low-resistance setting.

3. Measure between the power receptacle ground-post hole and an appropriate earth-ground location and ensure that resistance is less than 1 ohm. Figure 3 shows the post hole locations. (Appropriate earth-ground locations could include the floor grid, a metal case receptacle, and a circuit breaker shell.)

4. Remove the lock and tag and restore power through the customer's circuit breaker(s).

5. Set the multimeter to a high AC-voltage range.

6. Measure between the ground-post hole and an appropriate earth-ground location. **If you detect voltage on the ground-post hole, contact a site-approved electrician. Do not proceed with the installation.**

   NOTE: The ground wire may act as an antenna and, through impedance, generate a low voltage (usually less than 1 Vac). This is normal.

7. Perform voltage checks between the post holes listed in Table 3. Refer again to Figure 3, which shows the post hole locations.

Table 3. Required Power Receptacle Test Readings

Receptacle	From Post Hole	To Post Hole	Meter Reading
Hubbell #460C9W or equivalent ‡ – 200 to 240 Vac, 60 amp (4-pole [delta] receptacle used commonly in North America and Japan)	L1	G	Not to exceed 146 Vac
	L2	G	Not to exceed 146 Vac
	L3	G	Not to exceed 146 Vac
	L1	L2	Between 180 and 254 Vac
	L2	L3	Between 180 and 254 Vac
	L1	L3	Between 180 and 254 Vac
Hubbell #532C6W or equivalent ‡ – 400 Vac, 32 amp (5-pole [wye] receptacle used commonly in Europe)	L1	N	Not to exceed 254 Vac
	L2	N	Not to exceed 254 Vac
	L3	N	Not to exceed 254 Vac
	L1	L2	Between 360 and 440 Vac
	L2	L3	Between 360 and 440 Vac
	L1	L3	Between 360 and 440 Vac

For general reference, Table 4 lists the power requirements for each cabinet.

Table 4. Facility Power Requirements for each CRAY T3E AC Cabinet

Electrical Service	Specification
Voltage	200 to 240 Vac +6% to -10%, 3 phase or 400 Vac +10% to -10%, 3 phase
Frequency	50 or 60 Hz ±5%
Circuit breaker	200 to 240 Vac, 40 amp or 400 Vac, 20 amp
Maximum power consumption	5.00 kVA (4.75 kW) †
Hold-up time	60 milliseconds at full load
Total harmonic distortion (THD)	Less then 15% at full load
Power cable	4-ft. (1.2-m) pluggable drop cord
Receptacle: North America and Japan	200 to 240 Vac, Hubbell #460C9W, 60 amp ‡
Receptacle: International	400 Vac, Hubbell #532C6W, 32 amp ‡

† Refer to a machine unit specification (MUS) for the actual power consumption. You can obtain an MUS from your site planning representative.

‡ The Hubbell connectors listed for these applications require an adapter to accept conduit. If you use conduit, you may substitute the following Hubbell connectors with back boxes: substitute Hubbell #460R9W for Hubbell #460C9W, and Hubbell #532R6W for Hubbell #532C6W.

Figure 3. Power Plugs and Receptacles

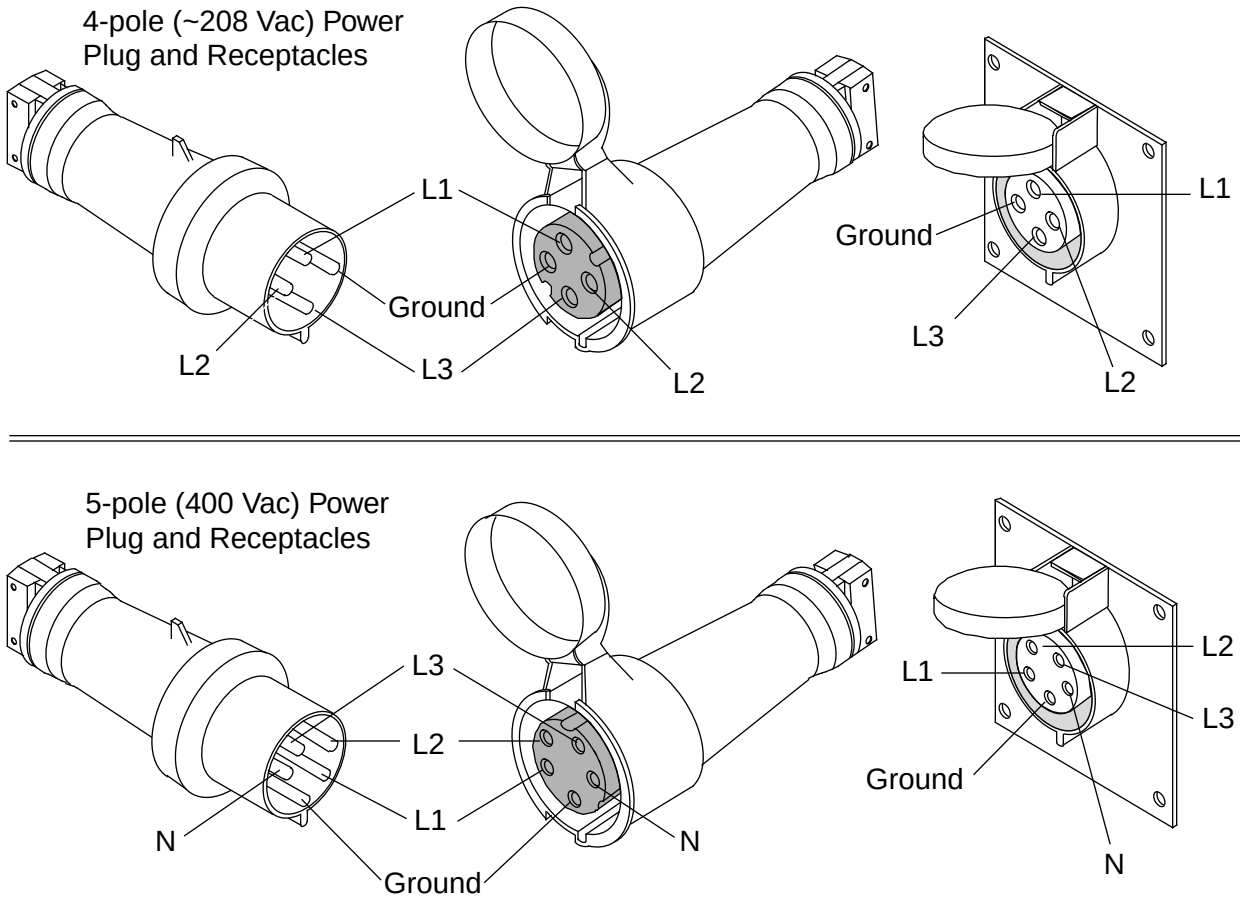

Power Wiring for High-leakage Current

Please note the following statement by Underwriters Laboratories, Inc.

> An insulated earthing conductor that is identical in size, insulation material, and thickness to the earthed and unearthed branch-circuit supply conductors except that it is green with or without one or more yellow stripes is to be installed as part of the branch circuit that supplies the unit or system. The earthing conductor described is to be connected to earth at the service equipment or, if supplied by a separately derived system, at the supply transformer or motor-generator (UL 60 95).

Unload the Computer Equipment

Cray Research ships CRAY T3E AC cabinets in three shipping configurations: 1 cabinet per shipping crate, 2 cabinets per crate, and 3 cabinets per crate. The number of new cabinets you receive and site access restrictions determine how your upgrade ships.

Figure 4 shows the CRAY T3E AC single-cabinet shipping configuration, with lift openings and dimensions. Figure 5 shows the CRAY T3E AC 2-cabinet shipping configuration, and Figure 6 shows the CRAY T3E AC 3-cabinet shipping configuration. Table 5 on page 35 lists the dimensions and weights.

In most cases, if your loading dock is the same height as the transportation vehicle, you may use ROL-A-LIFTs or pallet jacks to unload the system from the transportation vehicle. Specifically, you may use a pallet jack to unload a shipping crate that contains only 1 cabinet, and you must use Cray Research-provided ROL-A-LIFTs to unload shipping crates that contain 2 or 3 cabinets.

When you use ROL-A-LIFTs, position the ROL-A-LIFTs on the ends of the shipping crate as shown in Figure 6. Ensure that you place a board between each ROL-A-LIFT and the side of the shipping crate as shown in Figure 6; position the board 35 to 40 in. (889 to 1,016 mm) from the top of the shipping crate. (Two 2 in. x 4 in. boards are supplied with each crate that contains 2 or 3 cabinets; the boards are strapped to the outside of the crate.)

NOTE: You will also use the ROL-A-LIFTs when you *unpack* crates that contain 2 or 3 cabinets.

If the loading dock is not level with the vehicle, you must provide a forklift or another approved method to unload the system. A platform or ramp may be used to obtain the desired level as long as the ramp does not exceed a ratio of 1 unit vertical to 6 units horizontal. Refer to *Preparing for a CRAY T3E Air-cooled System Installation*, publication HR-04118, for more information on site requirements. If you have concerns about your site access route, contact a site planning representative by telephone at +1 715 726 2820 or by e-mail at *site@cray.com.*

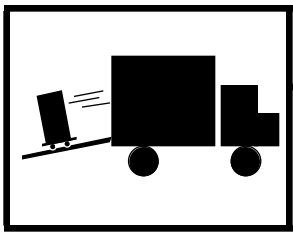

CAUTION

Prevent computer equipment from rolling off the transportation vehicle. Failure to do so could result in serious damage to the computer equipment.

If the computer site does not have a loading dock, arrange for a forklift to remove the computer from the transportation vehicle.

Ensure that at least two people are available to help move the mainframe cabinets. (We recommend that four or more people help move crates that contain 2 or 3 cabinets.) Perform all movement of the cabinets slowly and carefully. Follow any instructions that are printed on the packing crates.

Figure 4. Single-cabinet Shipping Configuration

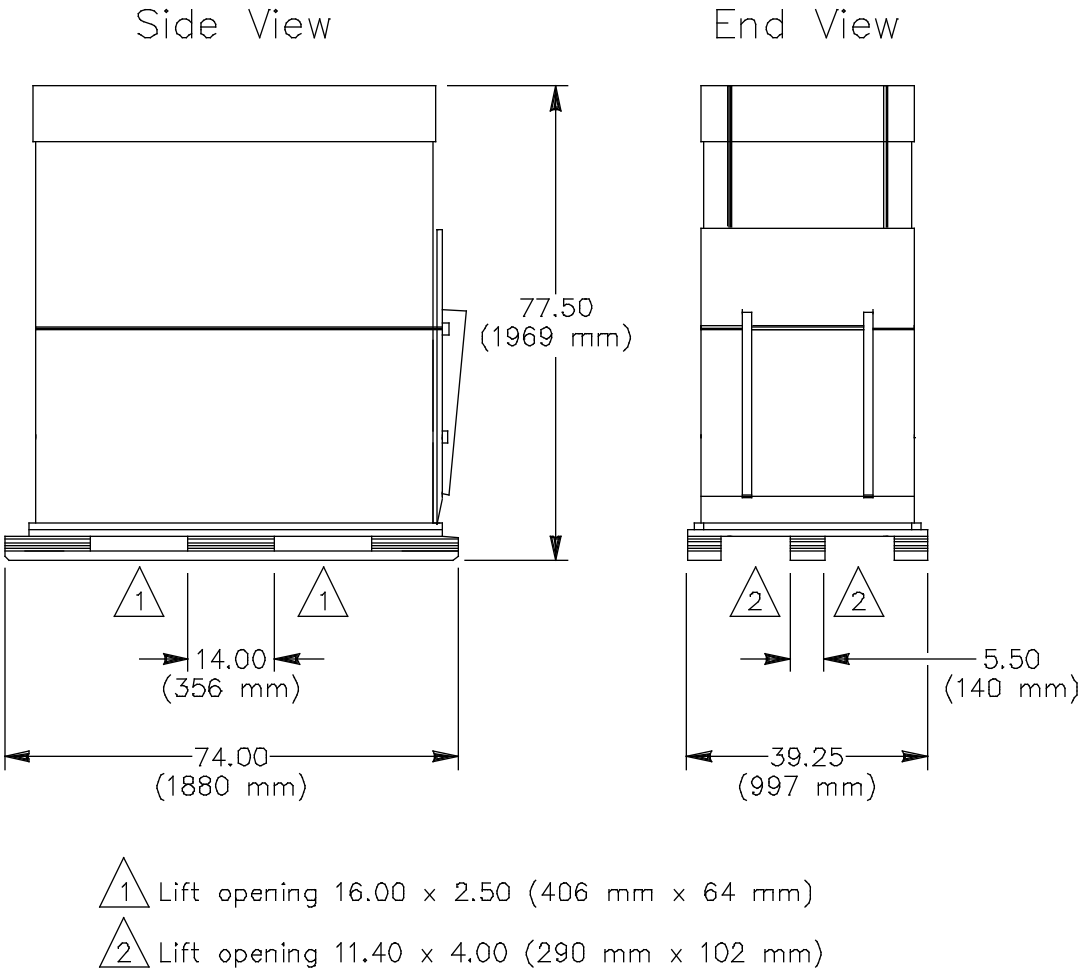

Figure 5. Two-cabinet Shipping Configuration

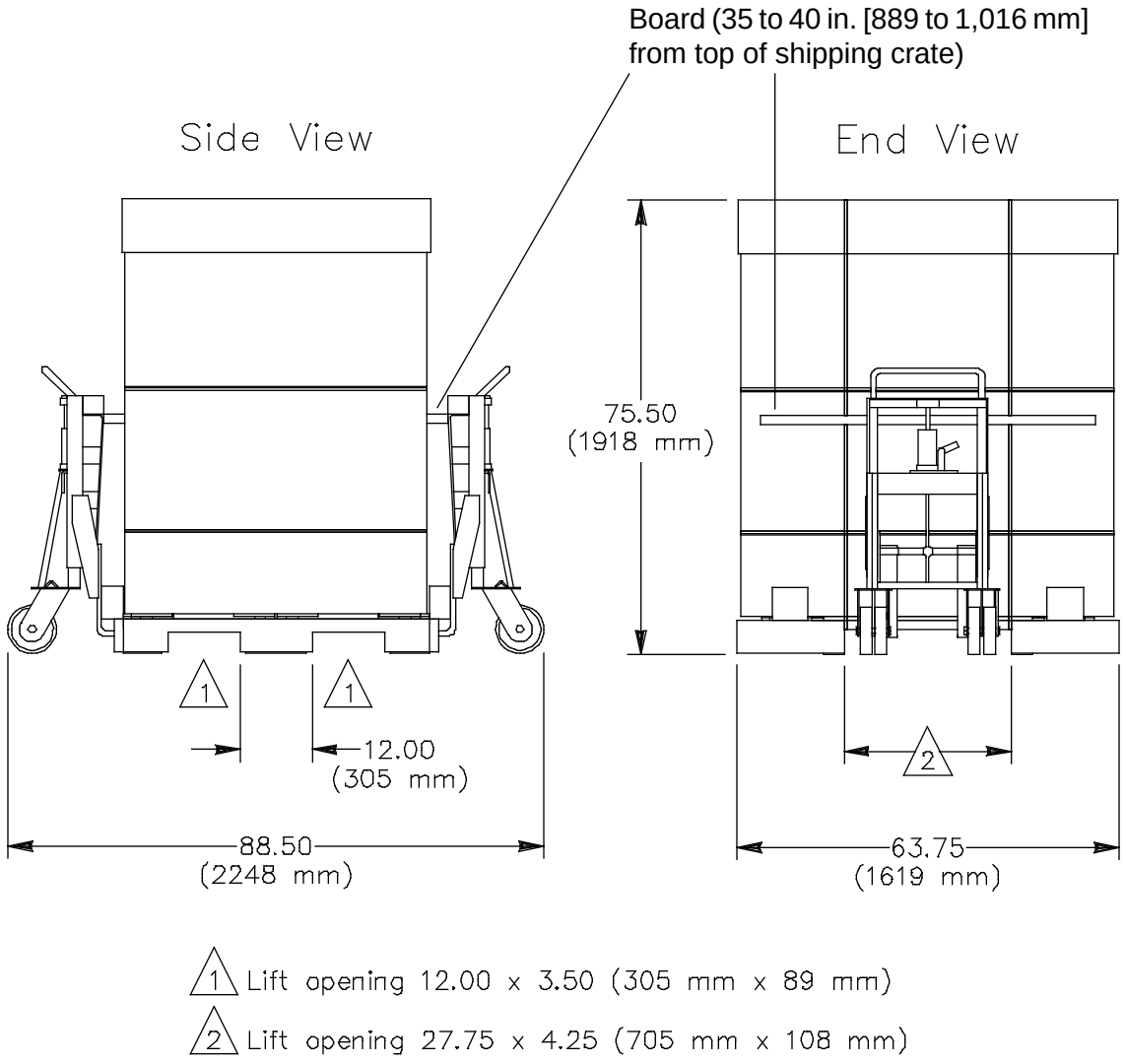

Figure 6. Three-cabinet Shipping Configuration

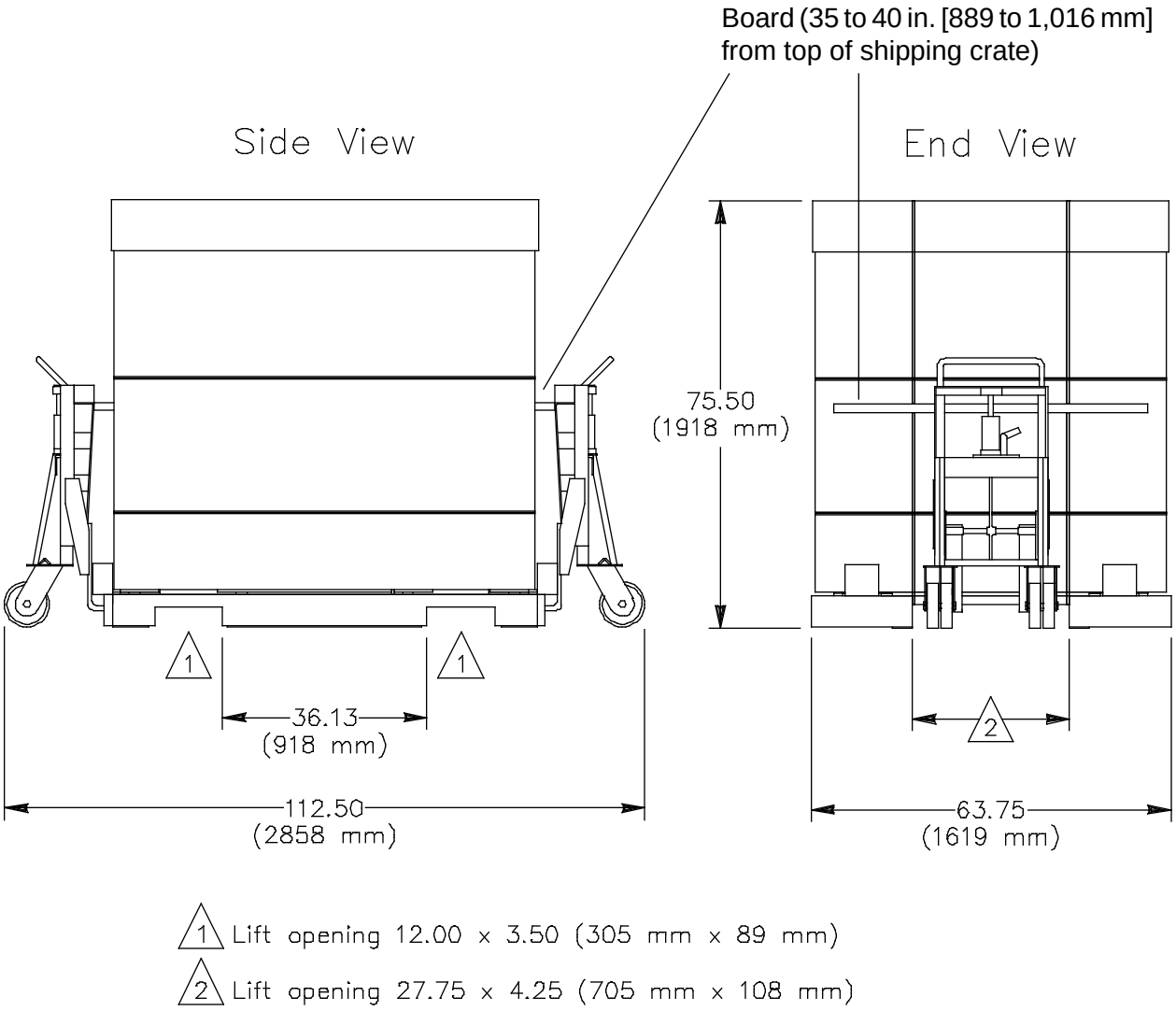

Inspect the Shipping Crates

After the system is unloaded from the truck, perform the following steps before you transport and unpack it.

1. Ensure that the shipping containers arrived unopened. If any containers are open, identify and record the opened containers through the CRUISE system.

2. Inspect the shipping containers for signs of external damage such as dents, holes, crushed corners, and water marks. Record any signs of external damage as an installation defect through the CRUISE system.

Later, when you unpack the system, check the contents of each shipping container against the packing list, which is attached to the outside of the container.

Transport the New Cabinets to the Designated Location

The method you use to move the CRAY T3E AC cabinets depends on the shipping configuration. This section provides general guidelines. In addition, follow any instructions that are printed on the packing crates.

You may use the following methods to transport each shipping crate that contains 1 CRAY T3E cabinet:

- One pallet jack on the *side* of the crate
- One long pallet jack (approximately 60 in. [152 cm]) on the *end* of the crate
- Two pallet jacks (one at each *end* of the crate) – short distances only

You may use the following methods to transport each shipping crate that contains 2 CRAY T3E cabinets:

- ROL-A-LIFTs at each *end* of the crate (refer again to Figure 6)
- One pallet jack on the *side* of the crate – short distances only

For each pallet that contains 3 CRAY T3E cabinets, you must use ROL-A-LIFTs (positioned on the ends of the crate) to transport the cabinets.

Cray Research recommends that you leave each system cabinet in its shipping crate until it reaches its final location. If the crate does not fit through the planned access route, you may partially disassemble the crate.

Table 5 contains the CRAY T3E AC cabinet shipping specifications:

Table 5. CRAY T3E AC Cabinet Shipping Specifications

Number of AC Cabinets	Height	Width	Depth	Weight
One	77.50 in. (1,969 mm) †	39.25 in. (997 mm)	74.00 in. (1,880 mm)	1,640 lbs (744 kg)
Two	75.50 in. (1,918 mm) †	63.75 in. (1,619 mm) ‡	54.50 in. (1,384 mm) ††	3,000 lbs (1,361 kg) ††
Three	75.50 in. (1,918 mm) †	63.75 in. (1,619 mm) ‡	78.50 in. (1,994 mm) ††	4,400 lbs (1,996 kg) ††

† Add 1.00 in. (25 mm) for rolling height.

‡ If the front and rear doors and the lower protective board (bumper/skirt) are removed, the width is reduced to 58.25 in. (1,480 mm).

†† Add 34.00 in. (864 mm) and 500 lbs (227 kg) if ROL-A-LIFTs are attached to the shipping pallet.

Refer to the appropriate installation documents for details on other equipment.

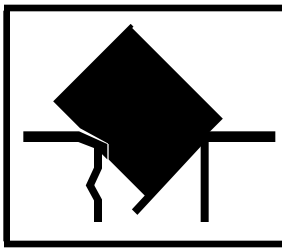

CAUTION

Do not apply floor plating over open floor tiles. Unsupported floor plating could collapse under heavy equipment and result in damage to the equipment.

Unpack the CRAY T3E AC Cabinets

This section contains unpacking instructions for shipping pallets that contain 1 cabinet and for shipping pallets that contain 2 or 3 cabinets.

If the system shipping or storage environment is significantly different than the environment in which it is to be installed [40 °F (22 °C) or greater disparity], leave the system cabinets in their shipping crates for at least 24 hours at room temperature before you start the installation. This acclimation prevents damage to the equipment that could result from thermal shock and condensation.

Unpacking a Crate that Contains a Single Cabinet

After you move the shipping crates to the designated location, use the following procedure to unpack each crate that contains 1 cabinet.

CAUTION

Steps 1 through Step 11 require two or more people to ensure personal safety and to protect the equipment. Failure to use two or more people could result in injury to personnel or damage to the equipment.

1. Locate the front of the shipping crate; it is marked FRONT. The ramp is attached to the front of the crate. Refer to Figure 7.

2. Cut the vertical straps that hold the cardboard shipping panels in place. These straps are tight and may snap when you cut them.

CAUTION

The restraining straps are tight and may hit you or someone nearby when you cut them. Wear eye protection and protect your body and face when you cut the straps. Ensure that other personnel either stand clear or protect themselves. Failure to do so may result in injury.

3. While someone holds the ramp, cut the horizontal strap. Set the ramp aside temporarily.

CAUTION
Someone must hold the ramp when you cut the strap. Failure to do so may cause the ramp to fall and result in injury to personnel.

Figure 7. Cabinet Shipping Crate

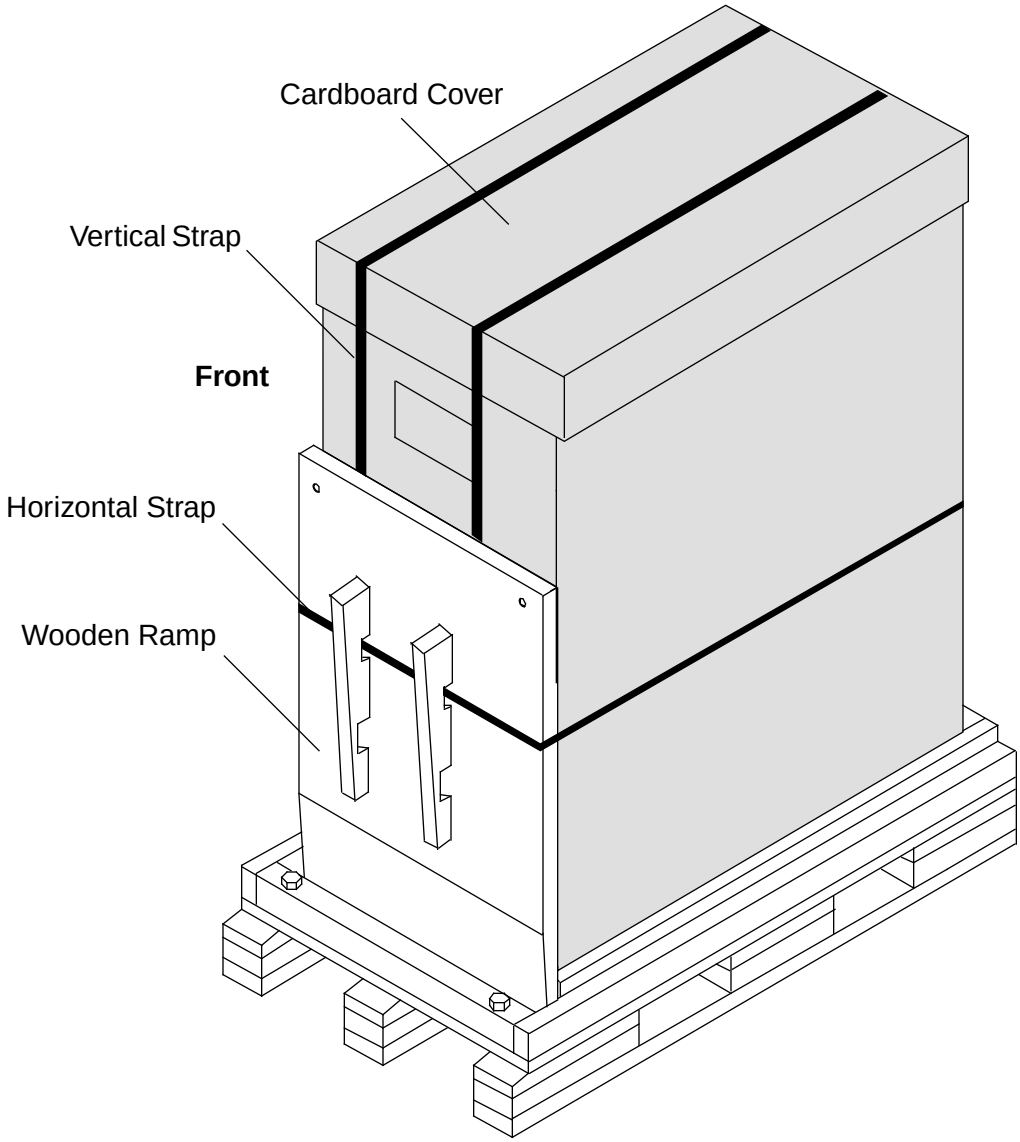

4. With an 11-mm wrench, remove the 2 retaining screws that secure the retaining block to the shipping crate, then remove the block, as shown in Figure 8. Retain the screws for the next step.

Figure 8. Retaining Block and Screws

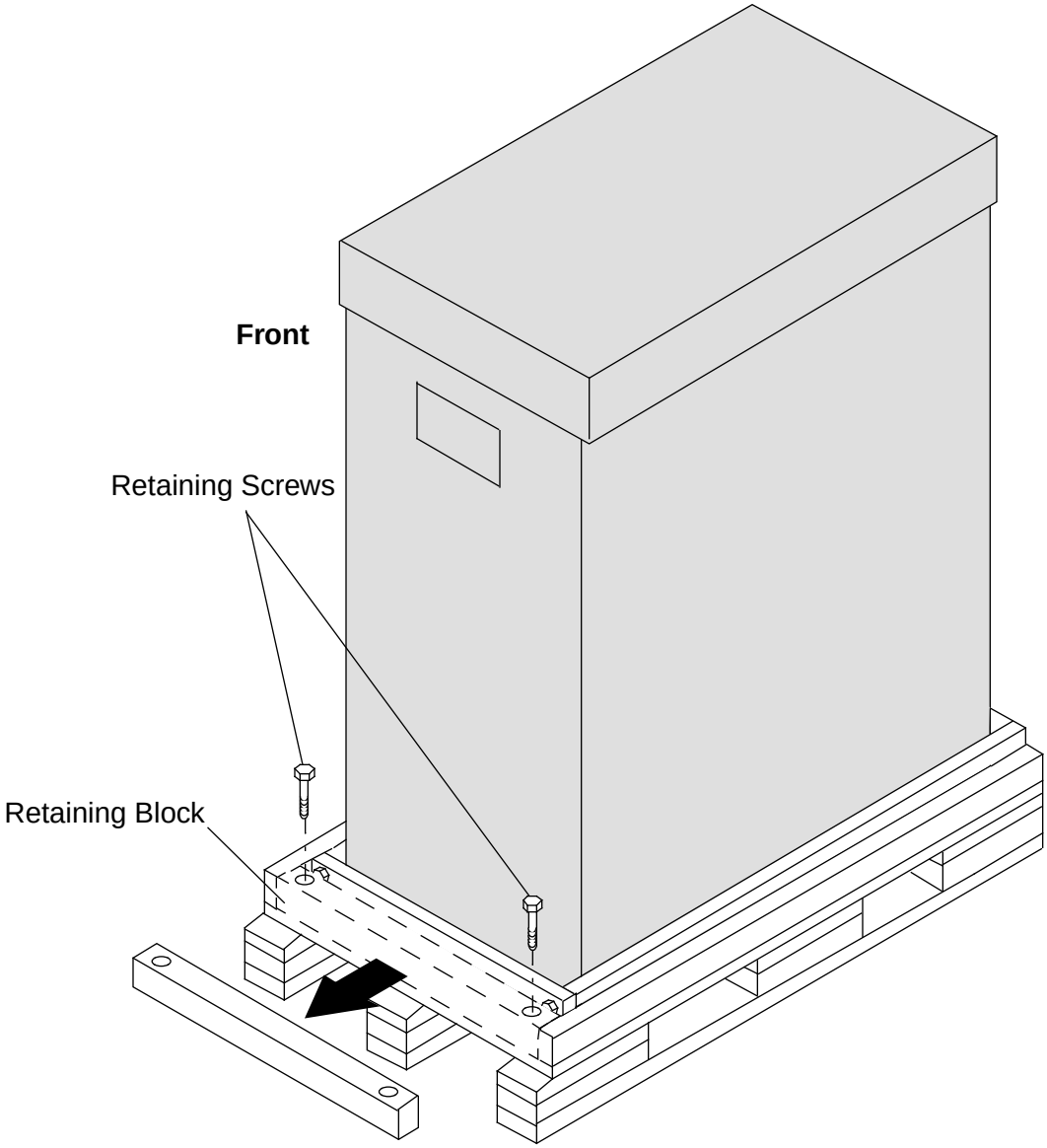

5. Install the wooden ramp:

   a. Position the ramp as shown in Figure 9, so that the screw holes on the ramp align with the holes on the pallet.

   b. Insert the screws that you removed in Step 4 through the holes.

Figure 9. Installing the Ramp

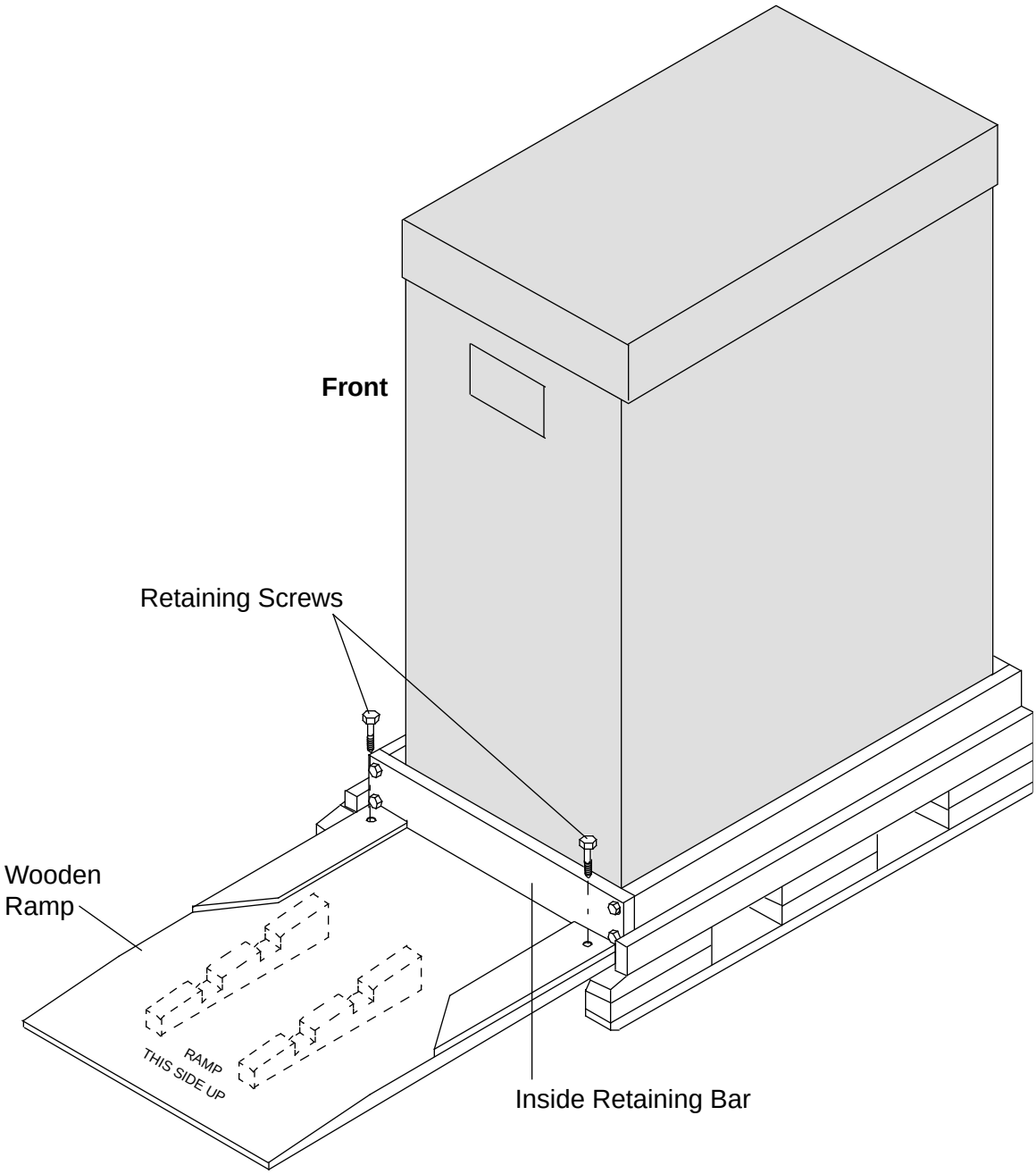

6. Remove the cardboard cover, the side panels, and the pad:

   a. Lift the cardboard cover from the top of the crate.

   b. Remove the two U-shaped side panels from the crate by lifting up and then out. Refer to Figure 10.

   c. Remov*e the foam pad from the top of the cabinet.

   d. If applicable, remove any additional pads or panels from the crate.

Figure 10. Cardboard Shipping Container

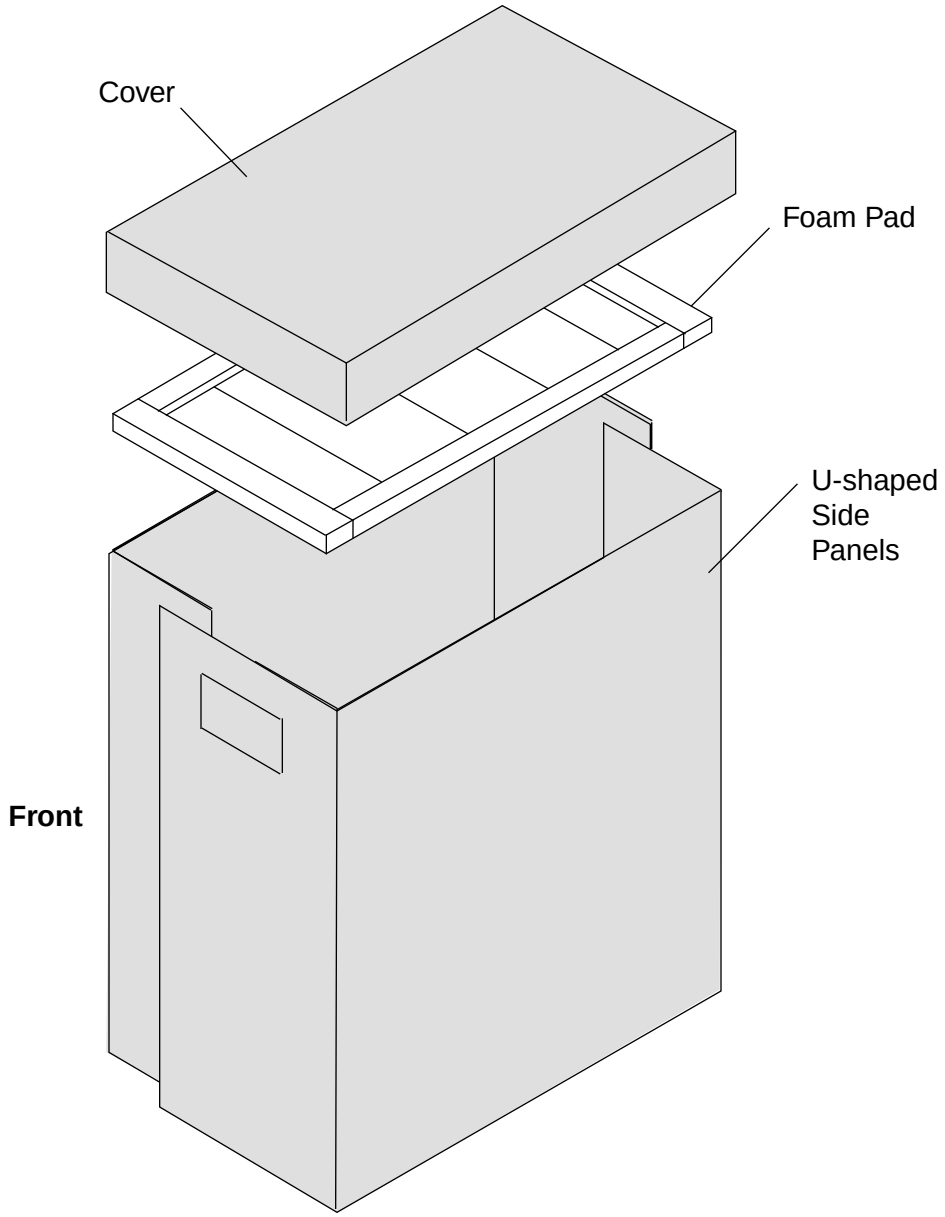

7. Use an 11-mm wrench to remove the inside retaining bar. Four screws secure the bar to the shipping crate as shown in Figure 11.

Figure 11. Removing the Inside Retaining Bar

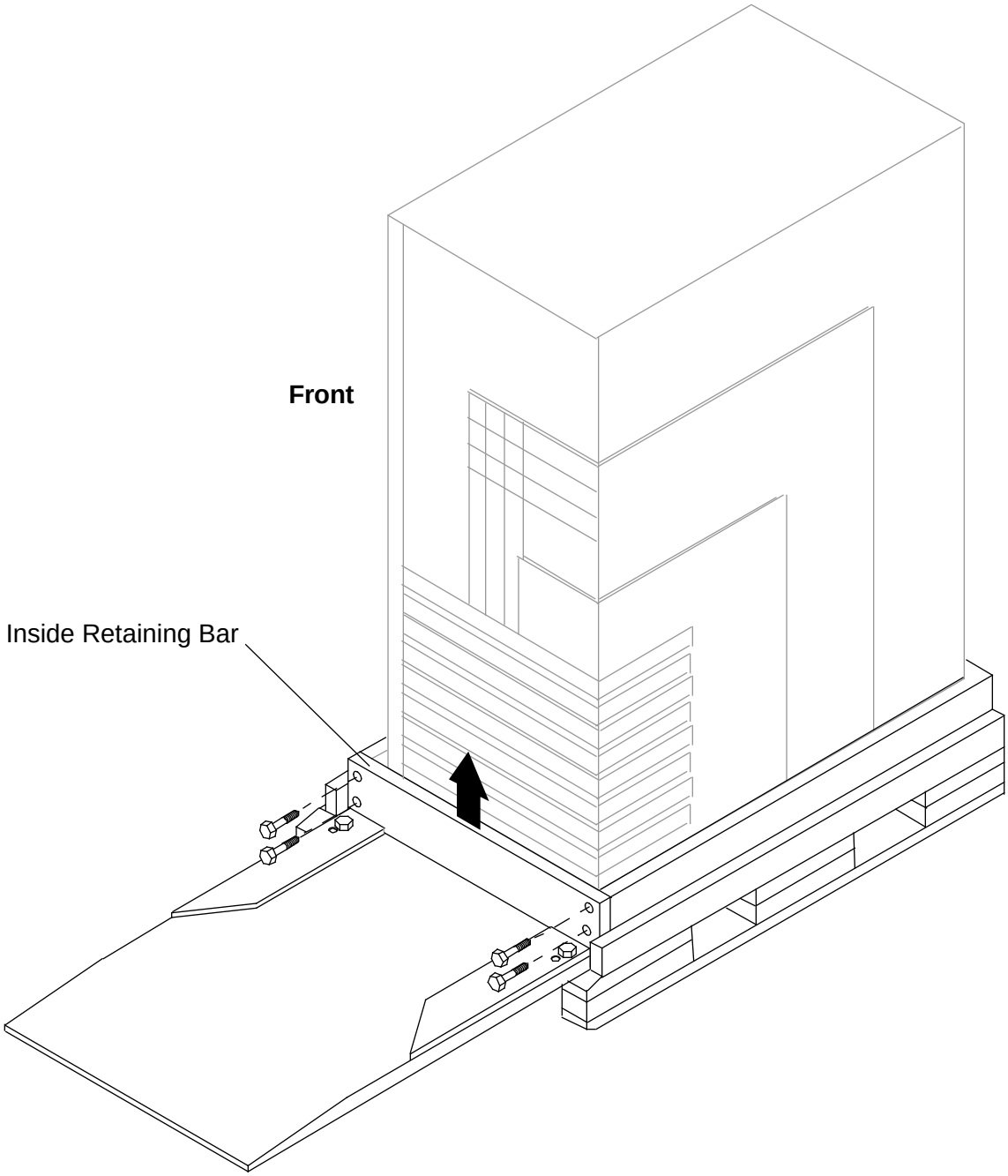

8. Use an adjustable wrench or a 17-mm wrench to remove the 4 shipping bolts that secure the cabinet to the pallet. To access them, reach under the shipping pallet between the floor pads. There are 2 bolts (with washers) on each side of the pallet. Refer to Figure 12.

9. Ensure that the cabinet levelers (legs) are raised completely and, if possible, ensure that the front casters (wheels) face the ramp.

Figure 12. Shipping Bolts

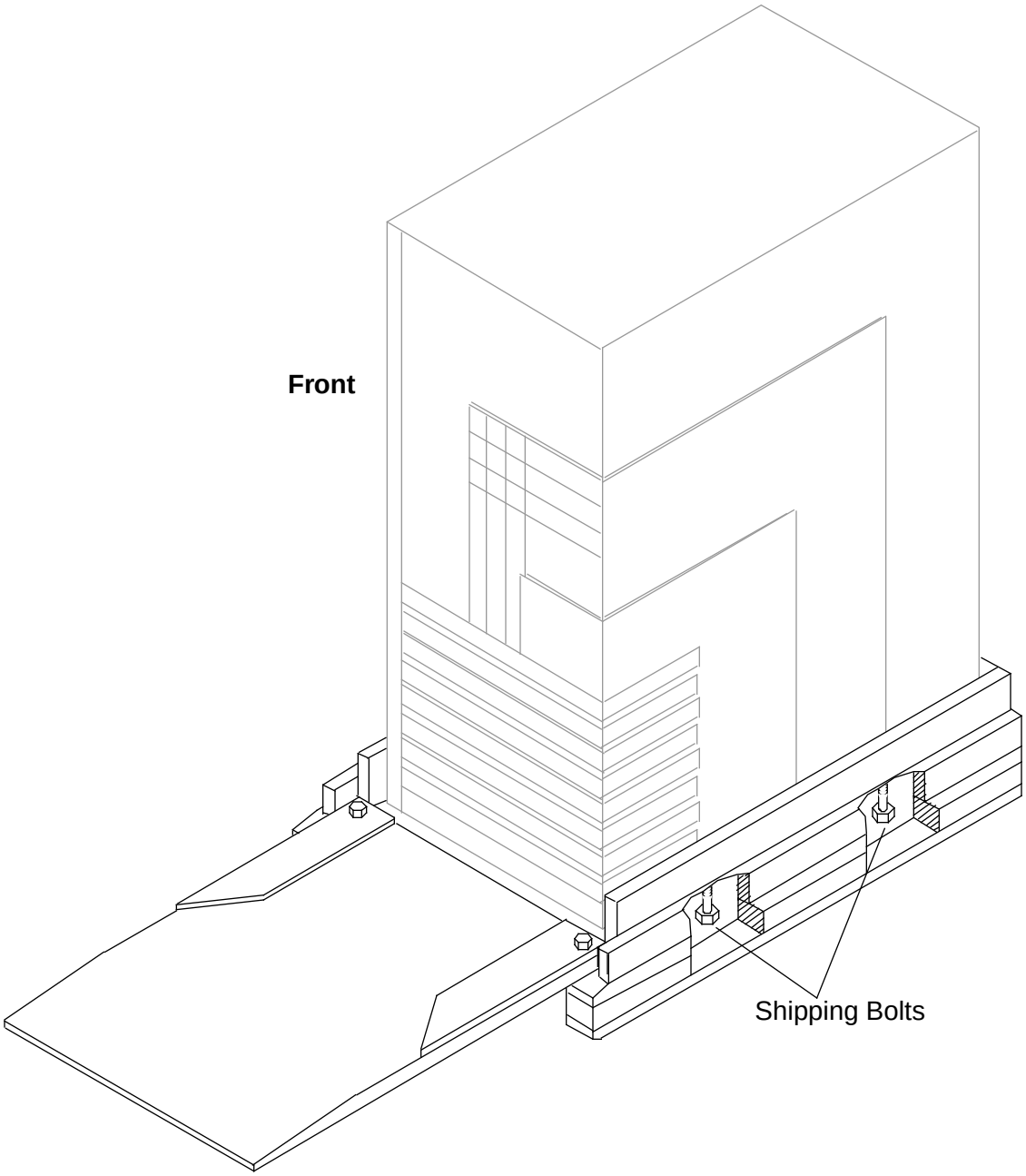

10. With one or more partners, carefully roll the cabinet down the ramp.

CAUTION
The system is heavy, and momentum may carry it down the ramp quickly. Ensure that the system does not roll off the pallet or the system may be damaged. Do not attempt to perform this step without help.

11. Move the cabinet close to the final location indicated on your site plan.

	CAUTION
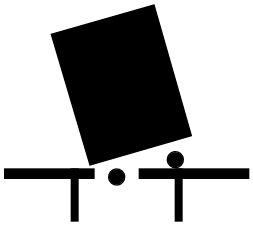	**Ensure that cabinet casters (wheels) do not fall into floor cutouts. Failure to do so could result in damage to the computer equipment and injury to personnel.**

12. Remove the protective plastic cover from the cabinet.

13. Remove the UL tag from the front air grill.

Unpacking a Crate that Contains Two or Three Cabinets

After you move the shipping crate(s) to the designated location, use the following procedure to remove the cabinets from each crate.

NOTE: The illustrations in this section show a 3-cabinet shipping configuration. The 2-cabinet shipping configuration is smaller, but functionally identical.

CAUTION
Step 1 through Step 13 require two or more people to ensure personal safety and to protect the equipment (four people are recommended). Failure to use two or more people could result in injury to personnel or damage to the equipment.

CAUTION
Do not lift the shipping crate via the wooden bumper (or skirt), which is on the perimeter of the shipping pallet. Lift the shipping crate via the pallet.

CAUTION
Never position your hand or any other part of your body beneath the pallet where it could be injured if the pallet drops to the floor.

1. Position the shipping pallet close to the final position indicated on the site floor plan. Leave the pallet on the ROL-A-LIFTs.

2. Remove the four wooden blocks from the shipping pallet. The blocks may be secured to the pallet by tie wraps (refer to Figure 13). Set the blocks aside for use in Step 5.

Figure 13. Remove the Four Blocks

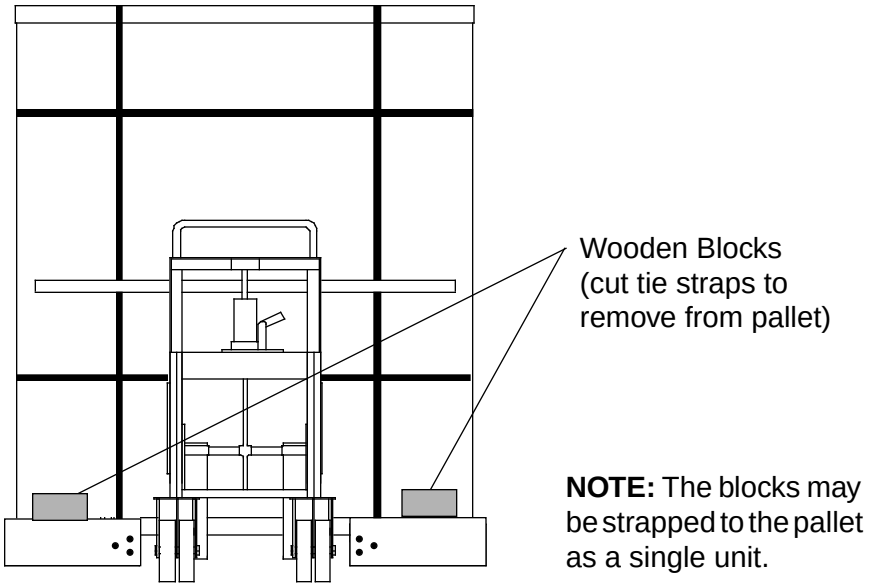

3. Remove the two wooden bumpers from the shipping pallet, using an 11-mm wrench. Six lag bolts secure each bumper to the shipping pallet. Figure 14 shows the lag bolts on one end of the shipping pallet.

Figure 14. Remove the Bumpers

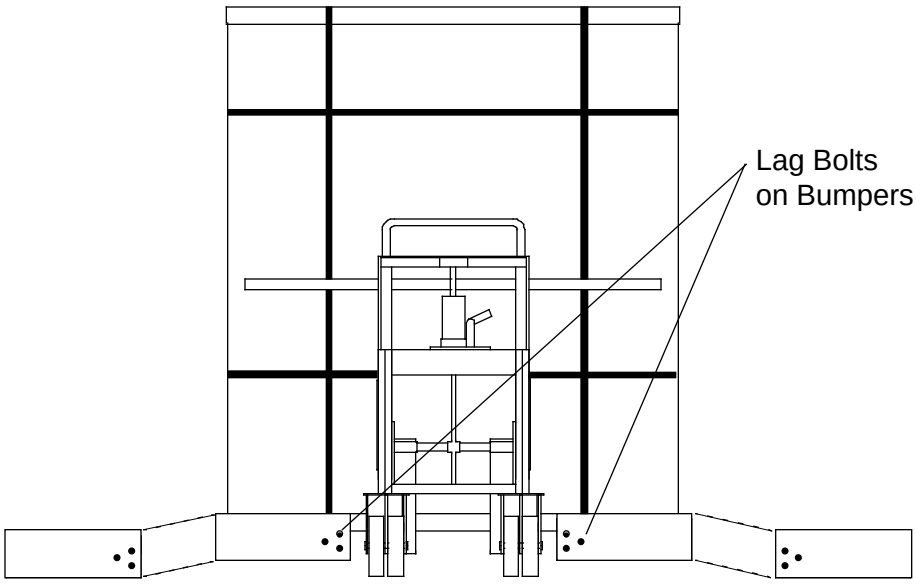

4. Ensure that the cabinet levelers are even with one another and raised slightly above the bottom of the casters (wheels). Then ensure that the casters and levelers are not positioned above any floor cutouts.

5. Raise the system and place a block beneath the cabinet leveler (leg) at each corner of the system. Refer to Figure 15.

Figure 15. Place the Blocks beneath the Corner Levelers

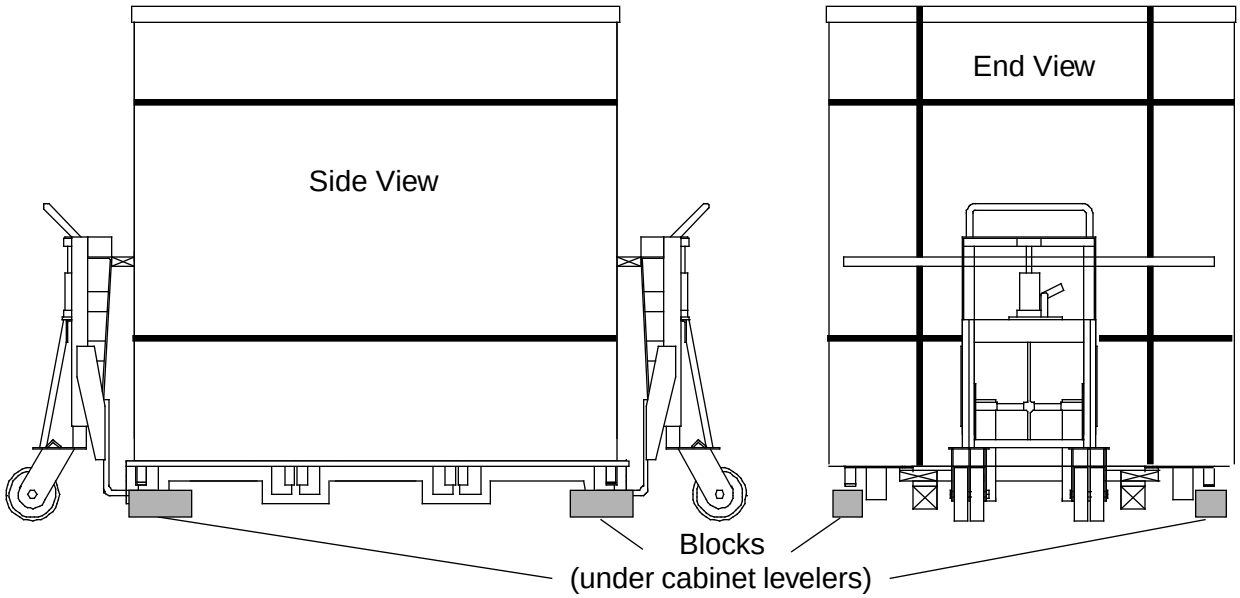

6. Carefully, lower the pallet until the cabinet levelers rest on the blocks. Ensure that the blocks hold the cabinets safely, then remove the lifts.

Figure 16. Lower the Cabinets onto the Blocks and Remove the Lifts

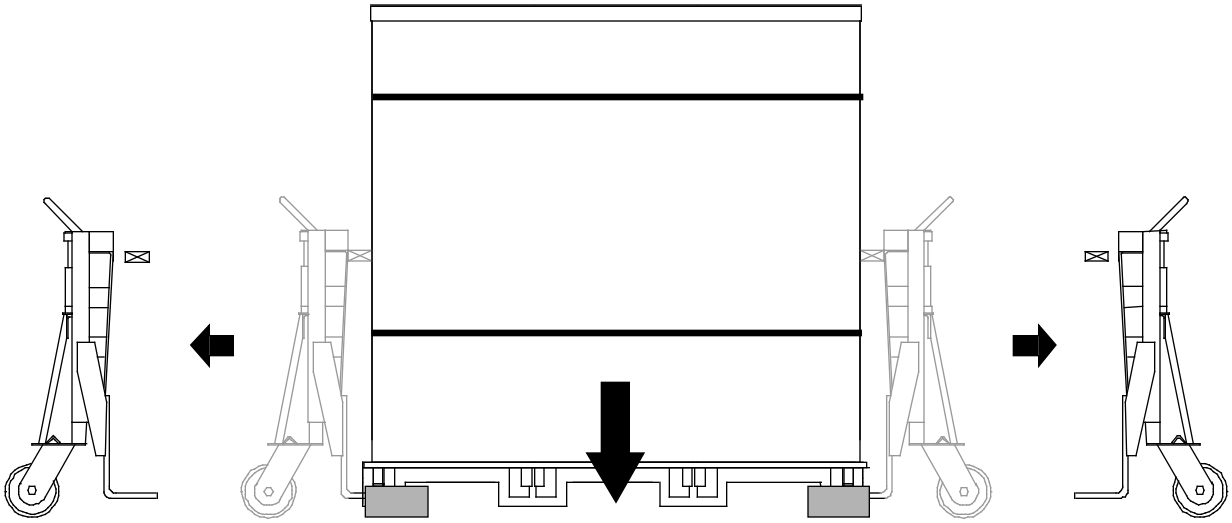

7. Cut the horizontal and vertical straps (bands).

CAUTION
The straps are tight and may hit you or someone nearby when you cut them. Wear eye protection and protect your body and face when you cut the straps. Failure to do so may result in injury.

Figure 17. Remove the Straps

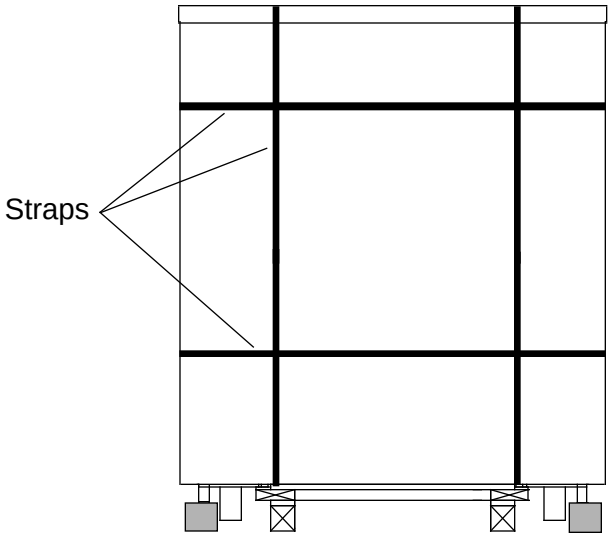

8. Remove the cardboard lid, then remove the two cardboard side panels.

Figure 18. Remove the Cardboard Lid and Panels

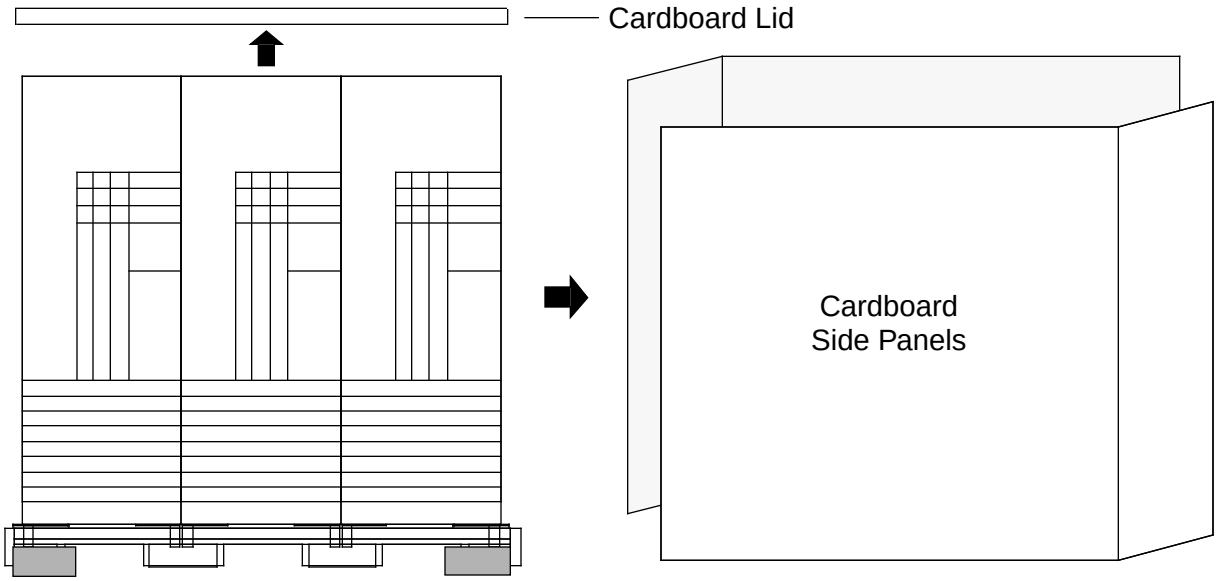

9. Remove the 4 shipping bolts that secure the cabinets to the pallet, using an adjustable wrench or a 17-mm wrench. There are 2 bolts on each side of the pallet. The bolts are located behind the 4 cabinet casters (wheels) at the corners of the system, as shown in Figure 19. Access the bolts from the front and rear ends of the pallet (i.e. the *door ends*).

CAUTION
The pallet is heavy and will drop to the floor as you remove the shipping bolts. Take all steps necessary to prevent injury to yourself and others.

Figure 19. Remove the Four Shipping Bolts

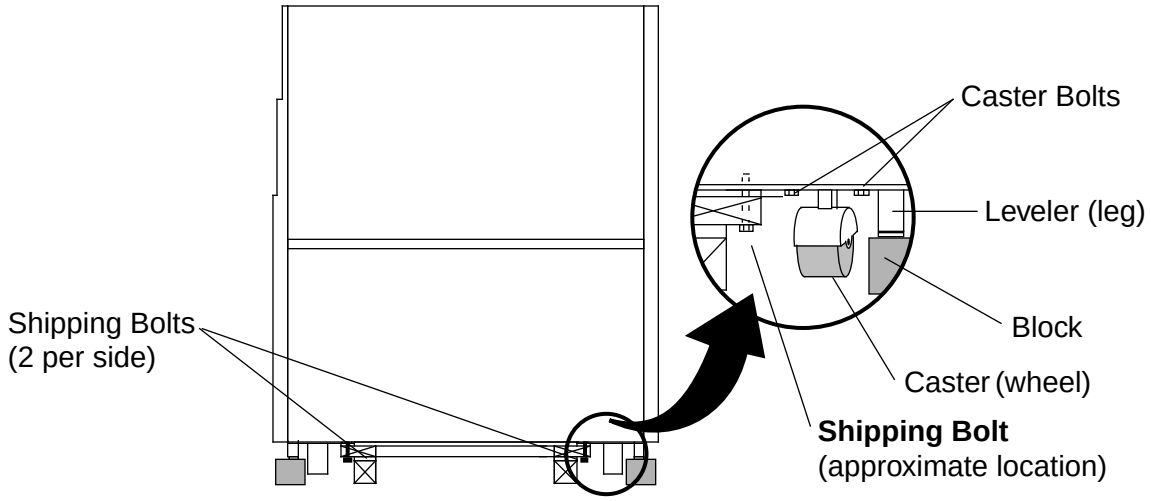

10. Remove the pallet from beneath the cabinets.

Figure 20. Remove the Pallet

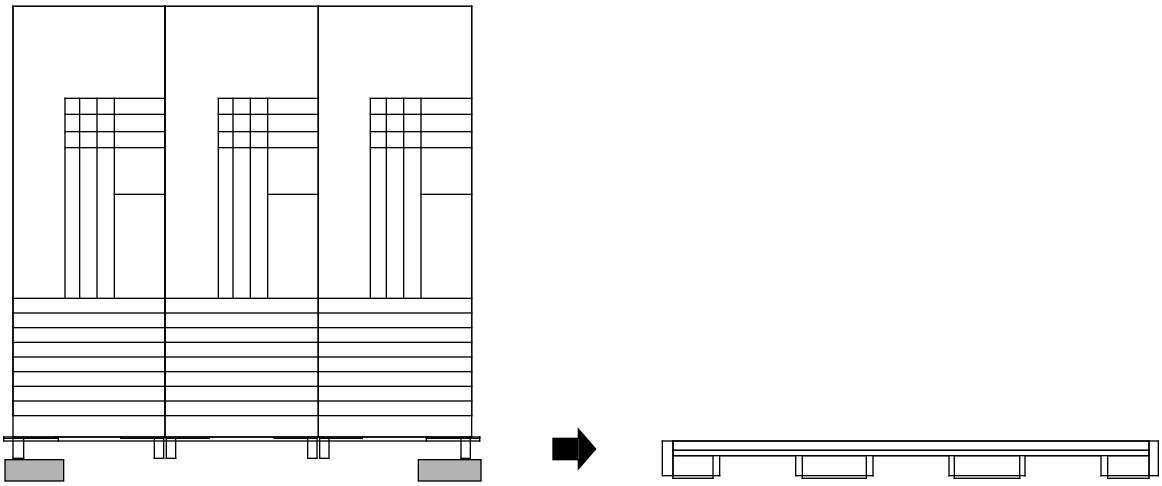

11. Raise the cabinets with the ROL-A-LIFTs and remove the blocks. (To do this, reposition the ROL-A-LIFTs on the sides of the cabinets. Ensure that you position the 2 x 4 boards between the ROL-A-LIFTs and the cross braces on the cabinets.)

Figure 21. Remove the Blocks

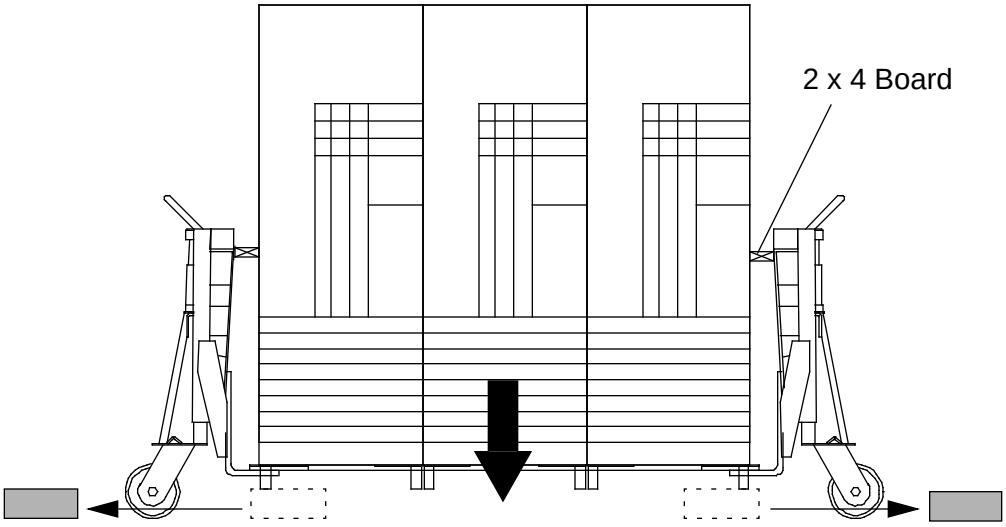

12. Again, ensure that the cabinet casters (wheels) and levelers are not positioned above any floor cutouts. Then carefully, lower the cabinets to the floor, and remove the ROL-A-LIFTs.

Figure 22. Lower the Cabinets to the Floor

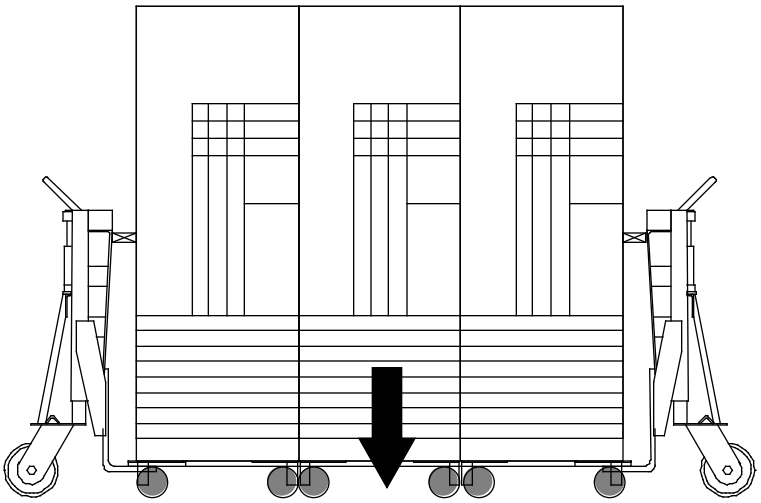

13. If necessary, roll the cabinets into the final location indicated on your site plan. This requires two or more personnel.

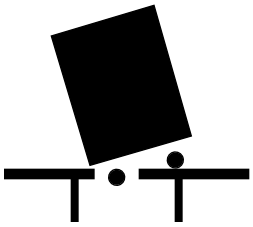

CAUTION

Ensure that cabinet casters (wheels) do not fall into floor cutouts. Failure to do so could result in damage to the computer equipment and injury to personnel.

14. Remove the protective plastic bag from the cabinets, and cut the tags from the air grills on the front cabinet doors.

Connect the Cabinets

This section contains procedures that you must perform to assemble the cabinets and prepare them for wiring.

Remove Power from the Existing System

1. Ensure that the operating system is down.
2. Open the front door of each cabinet in the existing system, using a 4-mm hex (allen) wrench.

Figure 23. Front Door

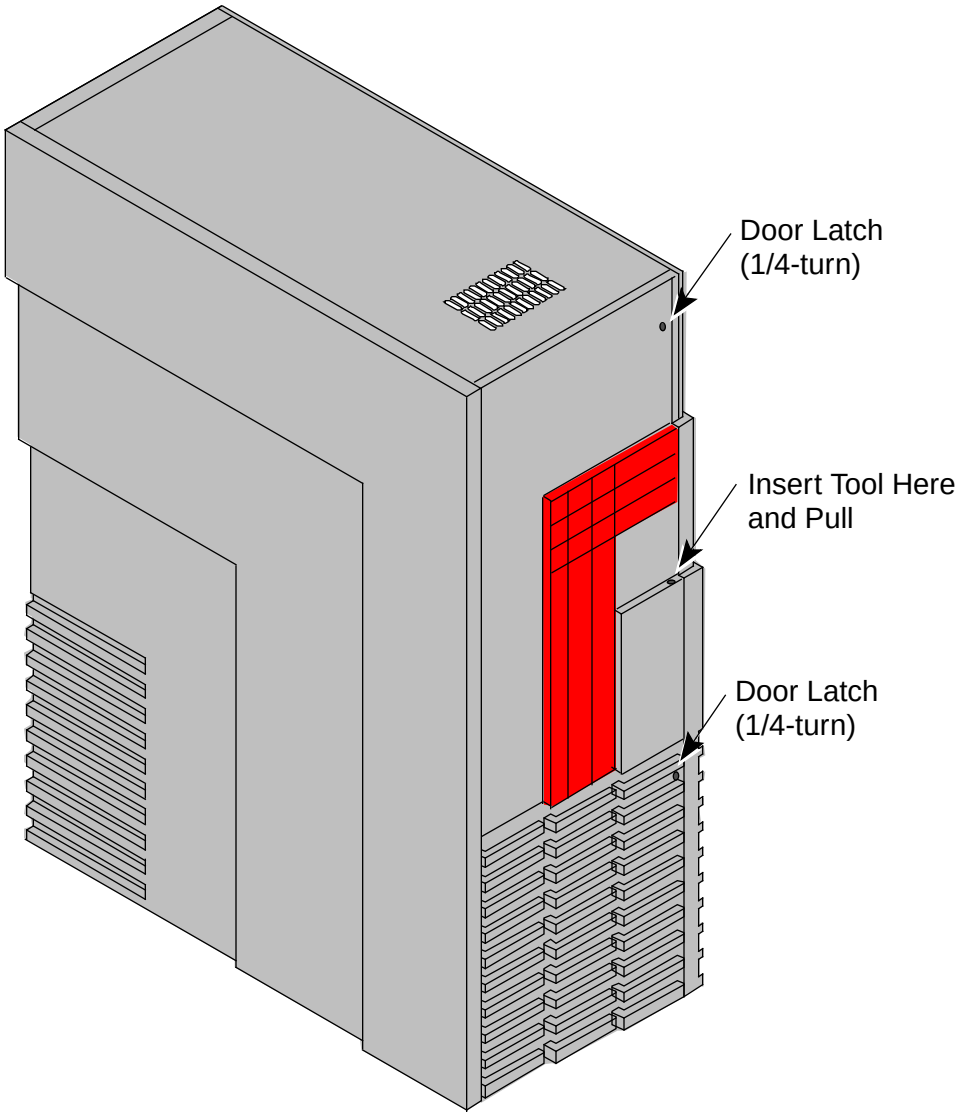

3. Open each cabinet's main disconnect circuit breaker (CB1) and open the customer's wall breaker(s). Then unplug each cabinet. Cover the plug with a lockout/tagout device and then lock and tag the device.

WARNING

Ensure that the plug(s) for the equipment being serviced are unplugged, locked, and tagged. Failure to do so could result in severe shock and burns.

NOTE: You may also lock and tag the customer breaker(s).

Position the New Cabinets Temporarily

1. Position the new cabinet(s) on the right side of the old cabinet(s), as you face the front of the cabinets. Leave approximately 24 in. (60 cm) between the existing cabinet(s) and the new cabinet(s) as shown in Figure 24.

   NOTE: The front of the cabinet is the end with the Cabinet Power switch, WACS display, and power supplies.

Figure 24. Temporary Cabinet Positions – Example

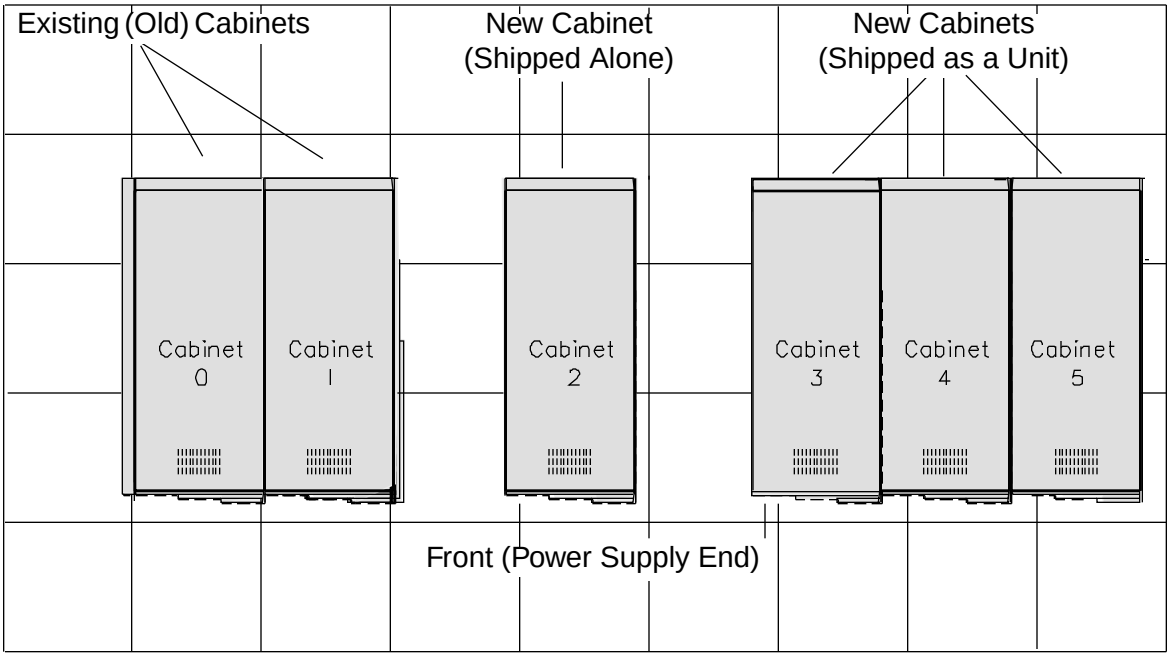

NOTE: The grids represent 24 in. X 24 in. (61 cm X 61 cm) floor tiles.

Determine Where You Will Connect Wires

Before you begin the following procedures, determine where you will connect internal cabinet wires. To do so, refer to the Engineering upgrade specification that you received with your upgrade materials. After you determine this, you will know which cabinets to remove access panels from.

For example: If you add cabinets to an old (pre-upgrade) system that contains 1 or 2 cabinets, then you must connect wires in every cabinet.

Remove Doors

Remove the following doors from the cabinets. A door removal procedure follows the list.

- Remove the rear (module end) door of every cabinet where you will connect wires, except for the *last* new cabinet in the system.
- Wherever you will join cabinets, remove the front door of the cabinet on the right side of the connection (as you look at the power supply end). This will improve access to the frame-joiner bolts.

CAUTION
Each door weighs approximately 40 lbs. (18 kg) and may be difficult to lift and hold. Be careful to avoid personal injury or equipment damage. Ensure that a second person is available to assist with the procedure.

1. Open each door:
   a. Each door has two latches: top and bottom. For each latch, insert a 4-mm ball-end hex (allen) wrench into the latch and turn the latch counterclockwise 1/4 turn.
   b. Grasp the door and swing it open. (The door contains a hole that aids in opening. You may insert a tool, such as a #2 Phillips screwdriver, in the hole to improve grip and serve as a door handle. The hole on the rear door is located near the middle right portion of the door, on the underside of a raised panel. **NOTE:** Be careful not to press the tool against the fiberglass trim. The fiberglass cracks and chips easily.)
2. Use a #2 Phillips screwdriver to disconnect one end of the ground wire that connects to the top of the door. (After you disconnect the wire, replace the screw and washer in the threaded hole.)
3. Disconnect the Cabinet Power switch connector (front doors only). The connection is near the top left corner of the front door. To release the connector, press the end of the locking lever while you pull up on the connector.
4. Carefully lift the door straight up about 1 in. (2.54 cm) until the door hardware clears the frame hinge, then remove the door.

5. Set the door in a protected location.

CAUTION
The edges of the fiberglass door panel are fragile. Be careful not to drop the door. When you set the door aside, ensure that the weight is supported by portions of the fiberglass that can bear the weight. In other words, lay the door flat or rest the door on the curved portion of the fiberglass rather than the edge.

Remove the Blower Exhaust Shields

Remove the blower exhaust shield from every cabinet where you will connect wires.

1. Disconnect the cable from the clock switch board, using a small flatblade screwdriver.

2. Remove the blower exhaust shield. Six #2 Phillips screws (with washers) hold the shield to the cabinet. The shield is supported by the screws, so you (or a partner) must hold the shield while you remove the last screws.

Remove Access Panels

Remove access panels from every cabinet where you will connect wires. Figure 25 shows the access panel locations.

1. Remove the module panel from each of the cabinets. Eight 1/4-turn captive screws secure each module panel.

2. Remove the upper plenum panel from each of the cabinets. Six #1 Phillips screws (with washers) hold each panel to the cabinet.

3. Remove the I/O panel from each of the cabinets. Six 1/4-turn captive screws secure each I/O panel.

4. Remove the lower plenum panel from each of the cabinets. Ten #1 Phillips screws (with washers) hold each panel to the cabinet: 4 screws across the bottom secure it to the I/O bulkhead, 3 screws on the left side secure it to the cabinet frame, and 3 screws on the right side secure it to the cabinet frame. Remove the bottom screws first.

Figure 25. Access Panel Locations

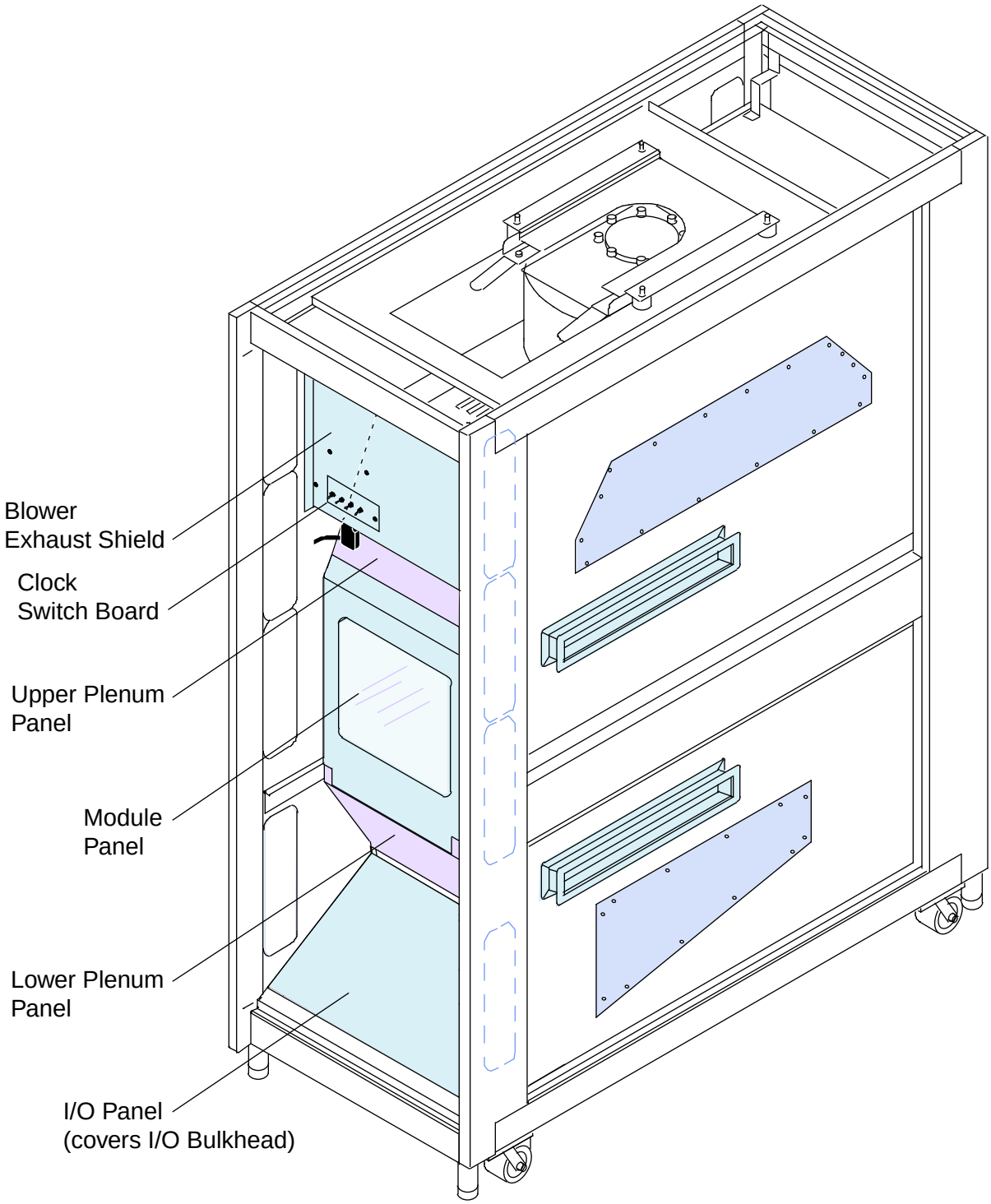

Remove Wire-duct Covers

The side trim bolts to the system through four frame-bolt holes in the side of the cabinet, one hole at each corner, as shown in Figure 26. These holes are also used to bolt cabinets together.

To bolt the cabinets together or to install the side panels, you must ensure that you can access these frame-bolt holes from the inside of the frame. You must remove wire-duct covers to access the holes.

1. Remove wire-duct covers from the right side of the last old CRAY T3E cabinet in your system so that you can remove the side trim panel. For example, you may need to remove the following wire-duct covers:

   - The lower-right wire-duct cover on the front side of the last cabinet
   - The lower-left and upper-left wire-duct covers on the back side of the last cabinet

   NOTE: The front of the cabinet is defined as the power supply end.

2. Remove wire-duct covers from the *new* cabinets so that you can bolt the cabinets together and install the side trim panel on the *new* last cabinet in the system. For example, you may need to remove the following wire-duct covers:

   - In all systems, you must remove the lower-left wire-duct cover from the front side of any cabinet that you bolt to the right side of another cabinet. (Refer again to Figure 26.)
   - In some systems, you must remove the lower-right wire-duct cover on the front side of any cabinet that you bolt to the left of another cabinet.
   - In some systems, you must remove the lower-right and upper-right wire-duct covers on the back side of any cabinet that you bolt to the left of another cabinet.
   - In some systems, you must remove the lower-left and upper-left wire-duct covers on the back side of any cabinet that you bolt to the right of another cabinet.

Eight #2 screws and washers secure each cover to the frame.

Figure 26. Frame-bolt Holes and Wire-duct Locations

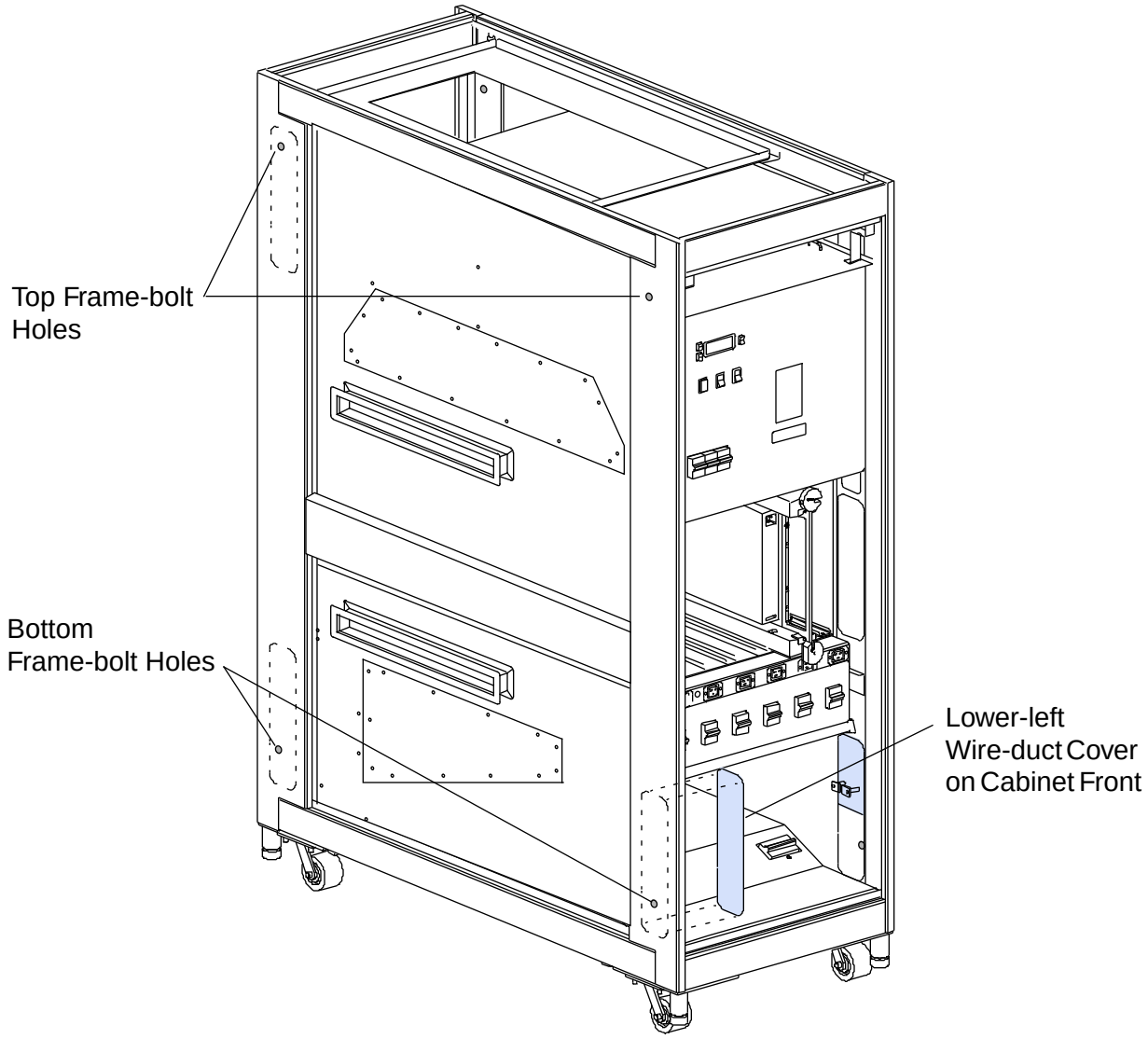

Remove the Right Side Panel from the Existing System

Use the following procedure to remove the trim from the right side of the existing CRAY T3E system (as you look at the power supply end of the system):

NOTE: This procedure requires two people.

1. Use a 10-mm socket to remove the nuts and washers from the bottom retaining studs. Refer to Figure 27. (Be careful not to drop any nuts or washers.)

2. While someone else holds the panel in place, remove the nuts and washers from the top retaining studs. (Again, be careful not to drop any nuts or washers.)

Figure 27. Remove the Right Side Panel

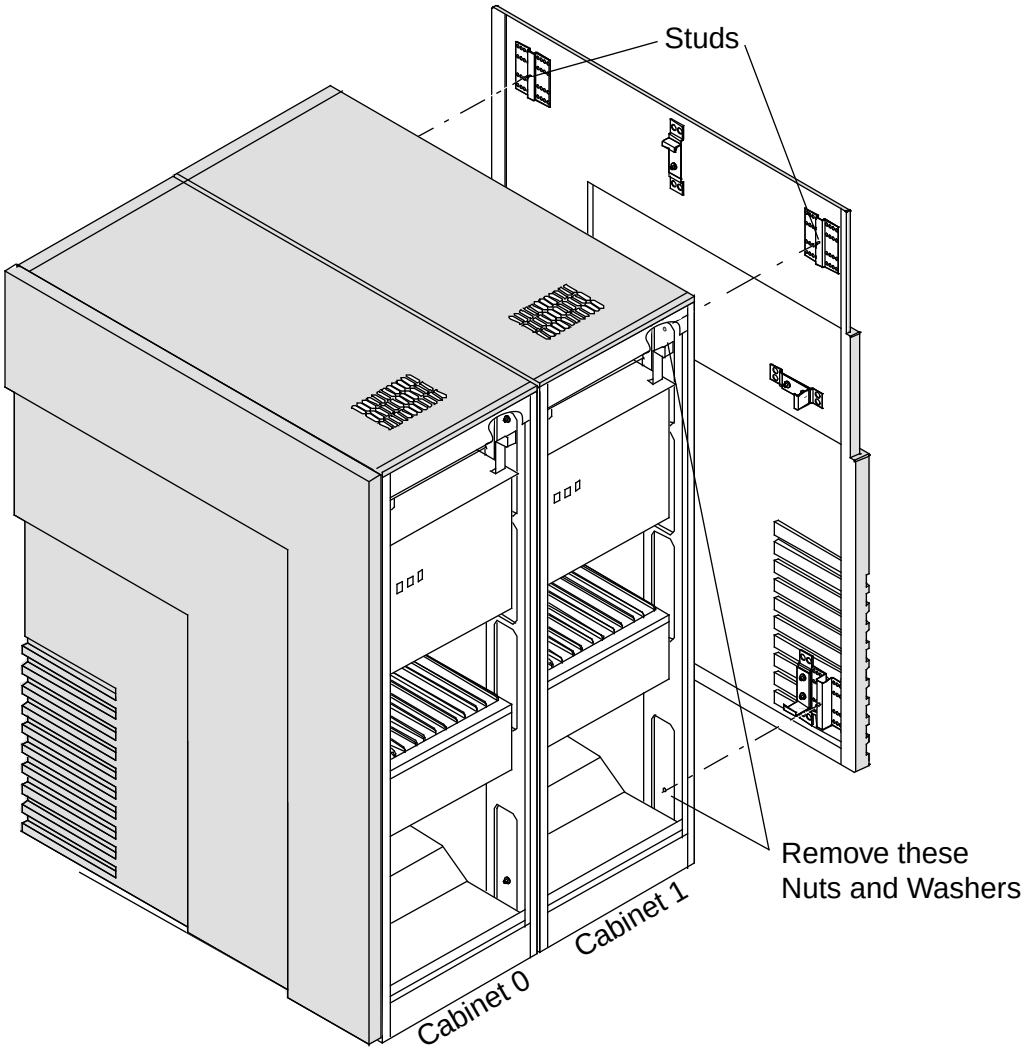

3. Remove the panel.

   a. With a partner, carefully lift the panel slightly then pull the panel straight out from the side of the cabinet. Keep the panel in a vertical position.

WARNING

Remove the panel carefully; the side panel may start tipping. The panel is heavy and will cause injury if it falls on someone.

   b. Set the panel in a protected location.

CAUTION

The edges of the fiberglass door panel are fragile. Be careful not to drop the door. When you set the door aside, ensure that the weight is supported by portions of the fiberglass that can bear the weight. In other words, lay the door flat or rest the door on the curved portion of the fiberglass rather than the edge.

Attach Cable Troughs

1. Check to see whether the cabinets arrived with the intercabinet cable troughs attached. (One set of cable troughs must be installed between each pair of cabinets.) Figure 28 shows a set of cable troughs.

2. If the cable troughs are not installed, install them on the right side of the last old cabinet and on the right side of each new cabinet (except the last cabinet).

   a. Position a cable trough (channel cable plenum assembly - P/N 57244200) over a cable duct (upper or lower).

   b. Use 8 M4 Phillips screws (P/N 13159003) with lock washers (P/N 13161503) to attach the cable trough to the cabinet. Start each screw by hand, then angle the screwdriver to access the screwheads. The screws are #2 Phillips, but a #1 Phillips screwdriver works better.

Figure 28. Cable Troughs

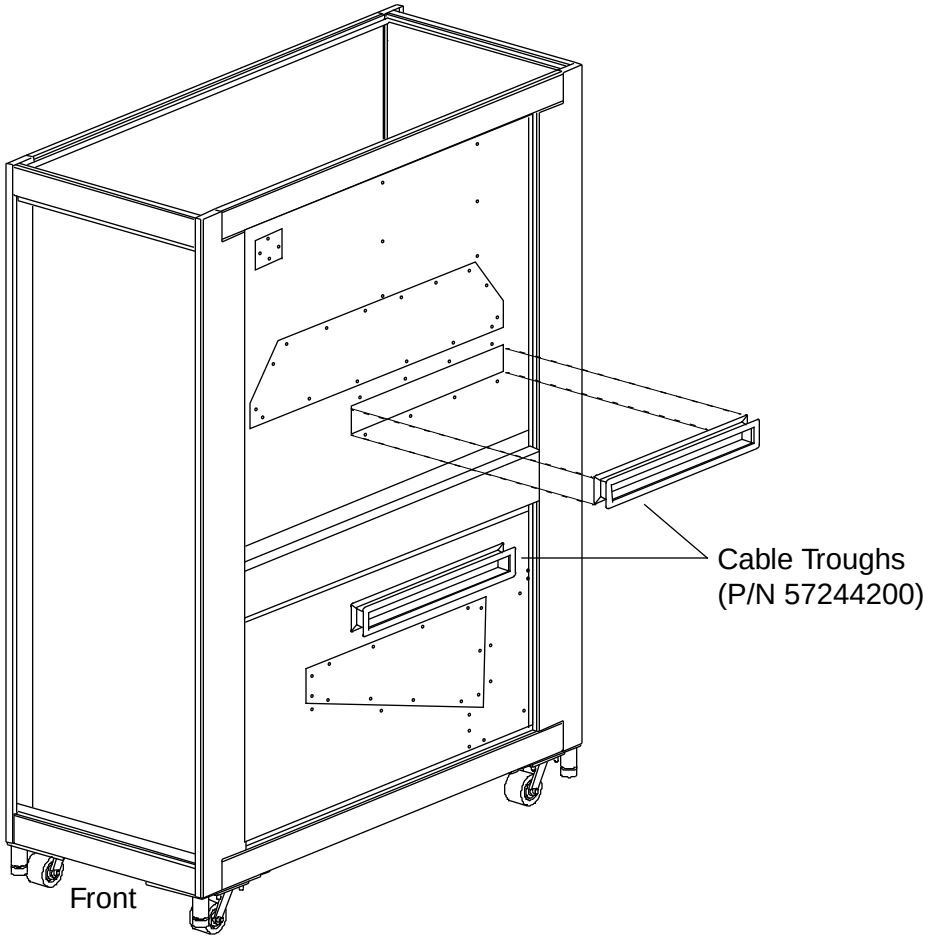

Bolt the Cabinets Together

We recommend that you join all of the cabinets before you begin the wiring process. For **each** new cabinet (or each set of prejoined cabinets) that you add, complete the following steps **-- one cabinet (or set) at a time**:

1. Position the new cabinet (or set) in the location indicated on your site plan. Ensure that the module end of each new cabinet is on the same side as the module end of the existing cabinet(s).

   Figure 29 shows the cabinet positions for a 6-cabinet system as you face the module end (rear) of the cabinets.

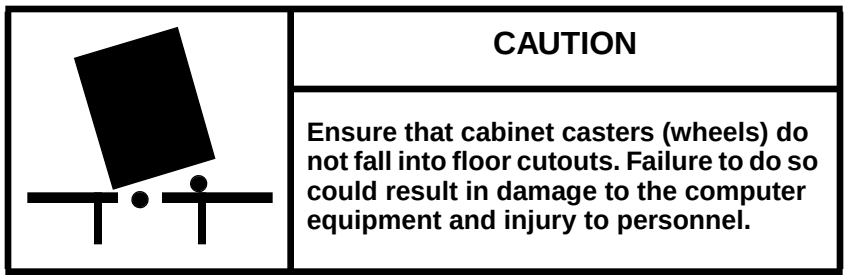

CAUTION

Ensure that cabinet casters (wheels) do not fall into floor cutouts. Failure to do so could result in damage to the computer equipment and injury to personnel.

Figure 29. Six-cabinet System

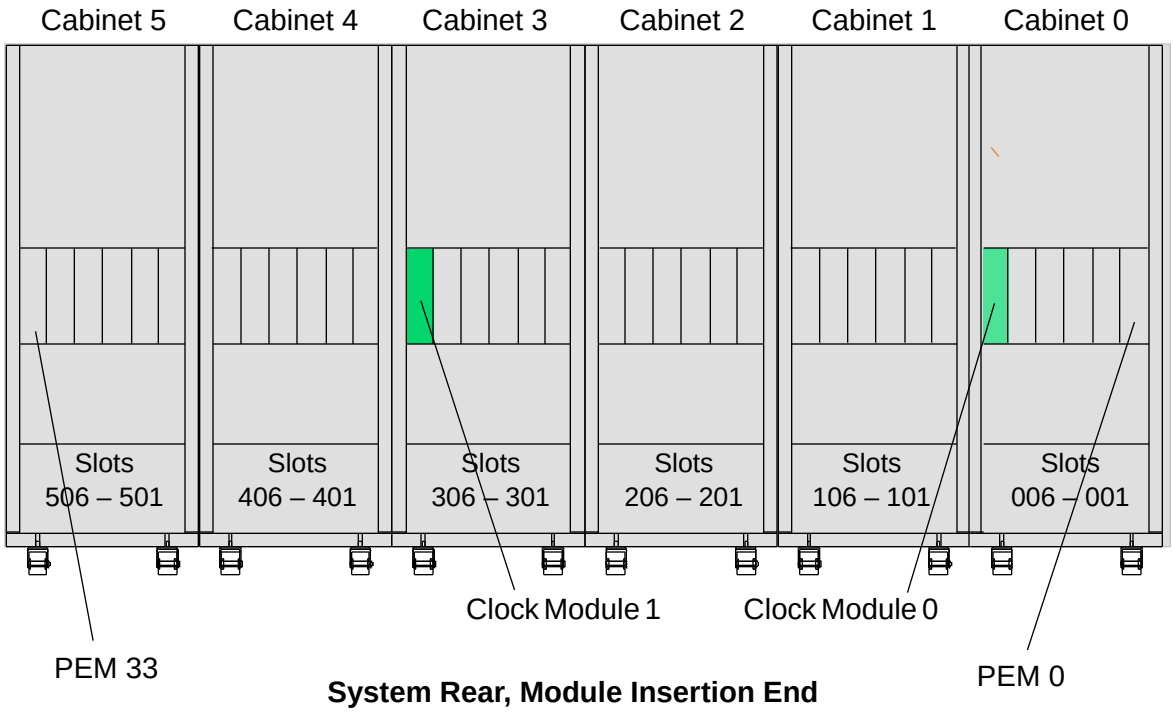

2. Align the new cabinet(s) with the old cabinets and ensure that the side of the new cabinet(s) contacts the side of the old cabinets.

   NOTE: The left-rear side of a cabinet is offset from the right-rear side of the cabinet to enable the door to swing. Therefore, you must align the cabinets by aligning the holes for the frame-joiner bolts. Refer to Figure 30.

Figure 30. Frame-joiner Bolt Locations

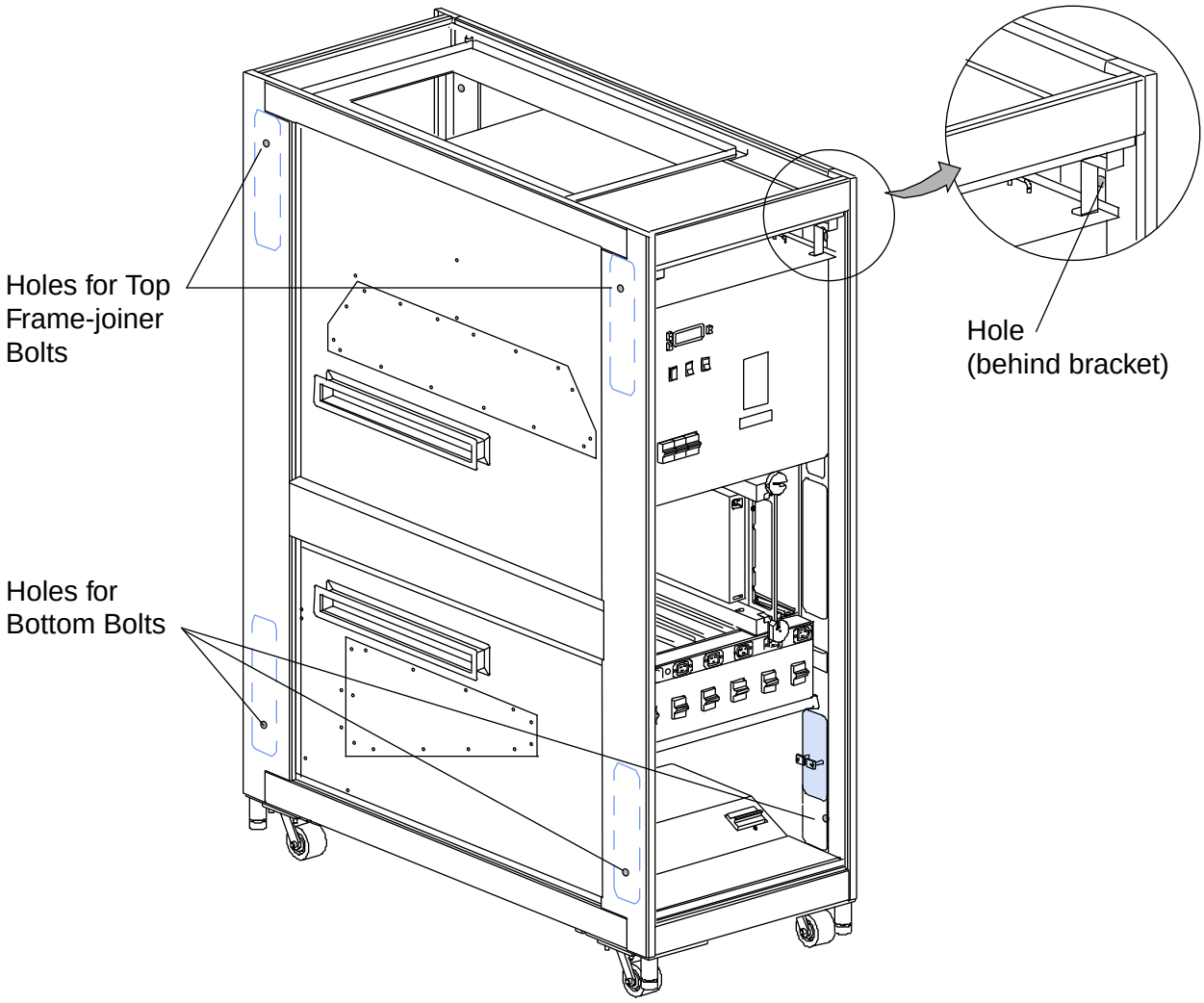

3. For each of the 4 frame bolt holes: insert a 4-mm hex (allen) bolt (P/N 13145305), with lock washer (P/N 13160905) and flat washer (P/N 57244500), through the hole so that it passes through the frames of both cabinets. Then add another flat washer, a lock washer, and a 10-mm nut (P/N 13161806) as shown in Figure 31.

   It does not matter which direction you install the screws from. Tighten the nuts only until finger tight. You will tighten them after you level the cabinet.

Figure 31. Frame-joiner Bolts

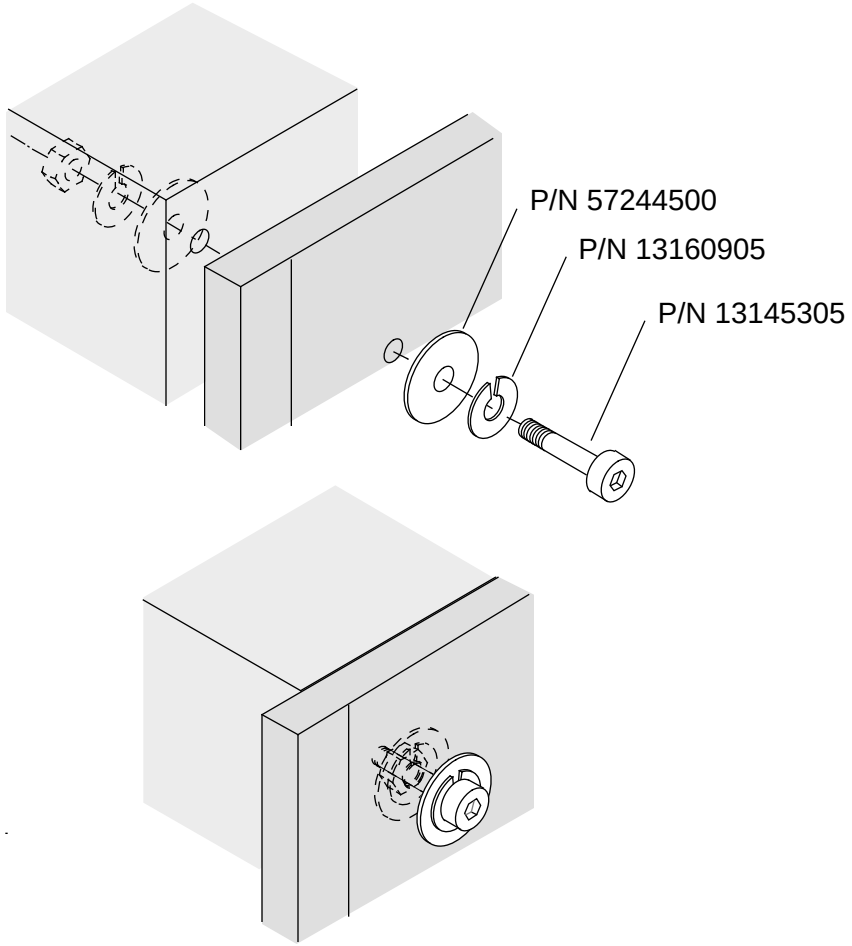

4. After you install the 4 frame-joiner bolts, use an adjustable wrench to lower the cabinet levelers (legs). Adjust the levelers so that the cabinets are level, align with the other cabinets, and do not roll when pushed.

5. Tighten the frame-joiner bolts and nuts until secure.

6. Repeat this procedure for each additional cabinet.

Open the Cable Ducts

In order to complete the intercabinet wiring, you must open the top and bottom cable ducts between any cabinets where you will connect wires.

1. Carefully loosen the 5 Phillips screws that secure each duct seal, using a #1 Phillips screwdriver. Then lift (or lower, in the case of the Y-side wiremat) the duct seals to provide room for the new wires and cables. Figure 32 shows the cable-duct seals.

   NOTE: The screws that are difficult to reach, may be loose already. Loosen the screws near you, then try to open the duct.

2. Secure the upper duct seals in the open position by tightening screws.

Figure 32. Intercabinet Cable Ducts

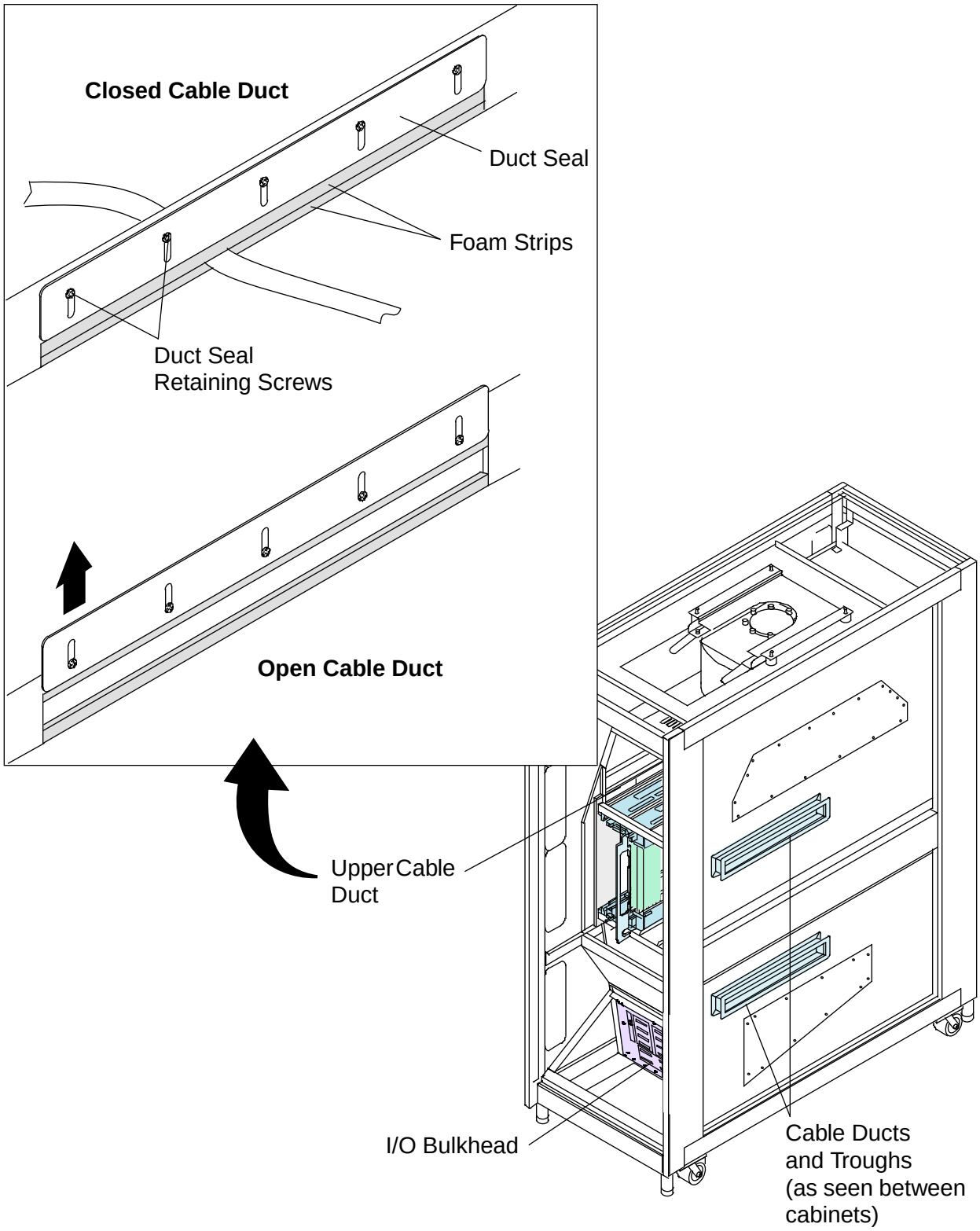

Ground the Cabinets

Use the following procedure to ground each new cabinet:

NOTE: Each chassis is grounded through the power cord; however, Cray Research recommends that you connect an additional chassis ground to each chassis. If your site chooses not to connect an additional ground for a chassis, you must remove the ground strap, which could act as an antenna.

1. Locate the grounding strap (near the I/O bulkhead), and uncoil it. Figure 33 shows two possible locations for the chassis ground connections; your cabinet will have a single ground strap.

2. Ground the cabinet. For example, connect the ground strap to the floor grid via a ground clamp.

Figure 33. Chassis Ground Connections (Rear View of Cabinet)

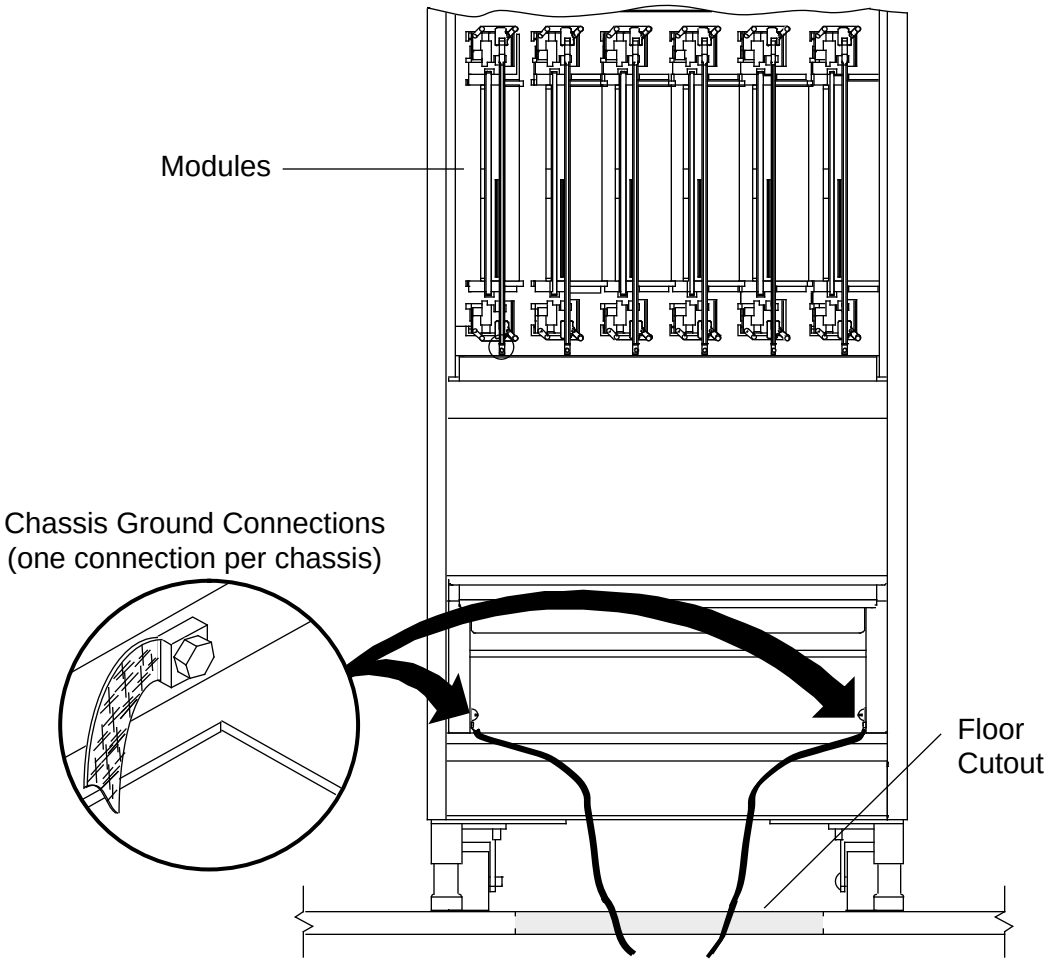

Prepare the Rails for Wire Insertion

For many people, the most efficient way to install the clock wires and other point-to-point wires is to unscrew the connectors from the module rails, pull the connectors into the card cage, and then complete the wiring. To do this, perform the following procedures:

NOTE: This document describes the procedures for completing the wiring while working in the card cage. You may also pull the connectors into the wiremat to complete the wiring. If you choose to pull the connectors into the wiremat, continue to use these procedures as a guide, but deviate from the procedures as necessary.

Remove Clock and Logic Modules

When you add one or more cabinets, you must connect clock wires to the clock rail connectors and, in some cases, to PEM rail connectors. To make these connections, you must remove the clock module(s). In addition, you must remove adjacent PEMs to provide access to the connectors via the card cage.

Use the following procedure when you remove modules:

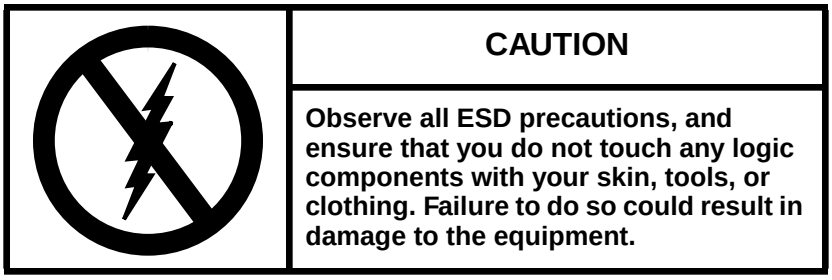

CAUTION

Observe all ESD precautions, and ensure that you do not touch any logic components with your skin, tools, or clothing. Failure to do so could result in damage to the equipment.

1. Prepare an ESD-safe surface (or surfaces) where you can set the modules.
2. Uncam the appropriate modules:
   - If your old system contained only 1, 2, or 3 CRAY T3E cabinets: Uncam clock module 0 and every PEM in cabinet 0. Figure 34 shows module camming.
   - If you add a fourth, fifth, and/or sixth cabinet to your old system: Uncam every module in cabinet 3 (clock module and PEMs).

   NOTE: Leave the cams in place when you remove (and insert) modules. This will prevent shuttles from slipping down and causing damage.

Figure 34. Module Camming

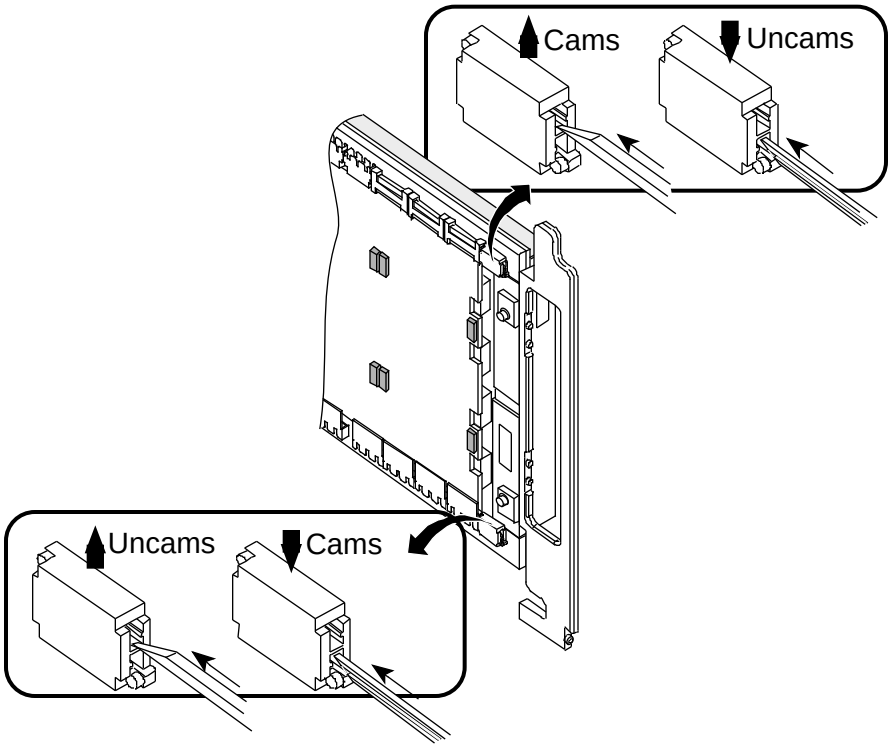

3. Remove each clock module and PEM that you uncammed:

   a. Use a 3-mm hex wrench to remove the module setscrew from the module handle. Refer to Figure 35.

   b. Grasp the module handle with both hands and pull with firm even pressure until the module is halfway out of the cabinet.

   c. When the module is halfway out of the cabinet, place one hand on the underside of the module assembly for support. For example, place your right hand (flat with palm up) beneath the module.

   d. With one hand on the module handle and the other hand supporting the bottom of the module, pull the module from the cabinet.

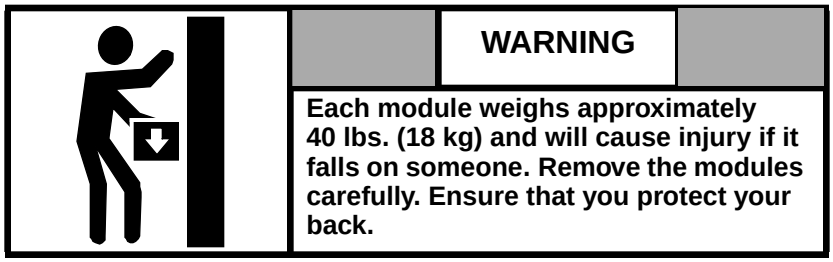

WARNING

Each module weighs approximately 40 lbs. (18 kg) and will cause injury if it falls on someone. Remove the modules carefully. Ensure that you protect your back.

4. Place each module on an ESD-safe surface. Ensure that the module rests upon the module heat sink.

   NOTE: If you must remove modules from two cabinets and you don't have enough room to store all of the modules, you may remove cabinet 0's modules first, complete the wiring to cabinet 0, then reinstall the modules. After this, you may remove modules from cabinet 3 and complete the wiring.

Figure 35. Module Setscrew Locations (Rear View of Cabinet)

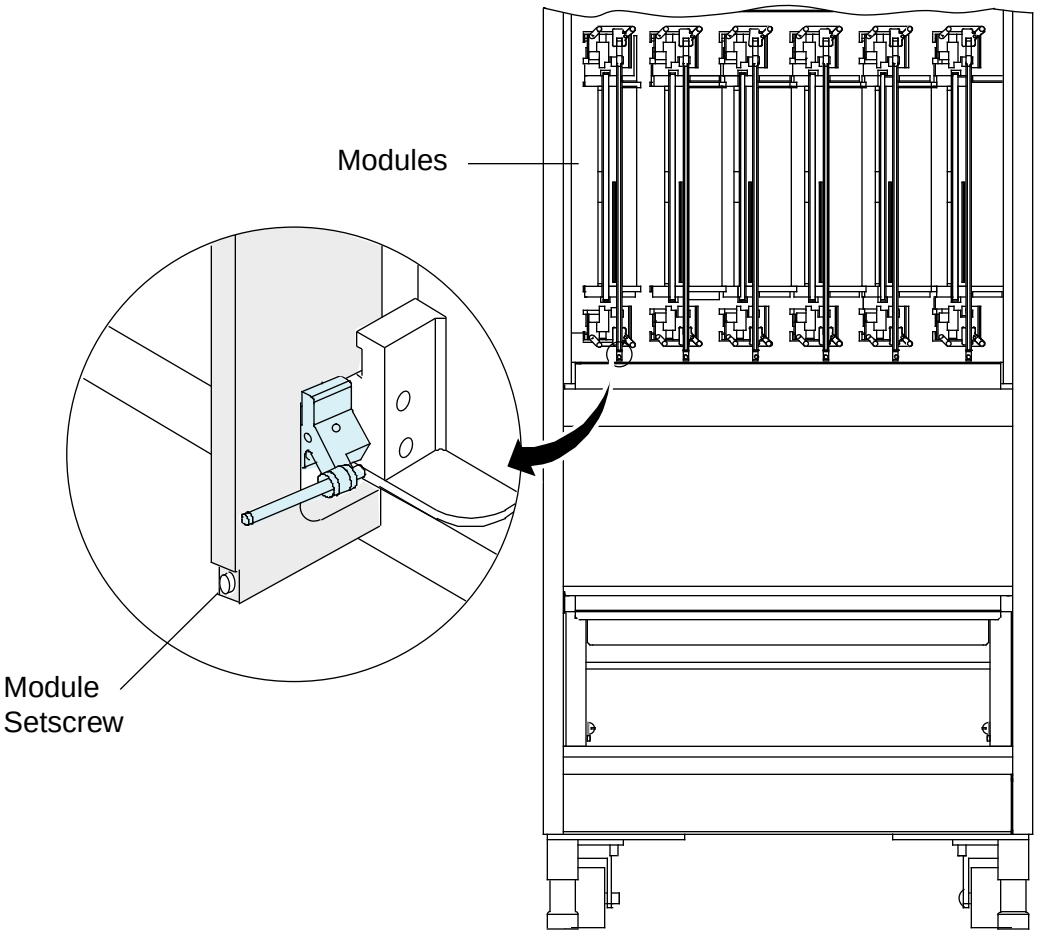

Remove Slot Plugs

You must remove foam slot plugs from various cabinet rails in order to connect some clock and boundary scan wires.

1. If your old system had only 1, 2, or 3 cabinets, remove the foam plugs that seal the three connector slots in the top clock rail in cabinet 0. Refer to Figure 36.

2. If your old system had 4 or 5 cabinets, remove the foam plugs that seal the three connector slots in the top clock rail in cabinet 3. Refer to Figure 36.

3. If you add a fourth cabinet (cabinet 3) to your old system, remove the following foam plugs:

   - Remove the plugs that seal the three connector slots in both top clock rails.

   - Remove the plugs that seal connectors zai and zah in slot 1 of cabinet 0 and slot 1 of cabinet 3. (In other words, remove the plug from the slot in the top rail that does not contain torus cables.)

   - Remove the plugs from the third connector slot in the *bottom* clock rails. (In other words, remove the plug from the slot that is closest to the power supplies so that you expose connector yah.)

Figure 36. Removing Plugs from the Top Clock Rail

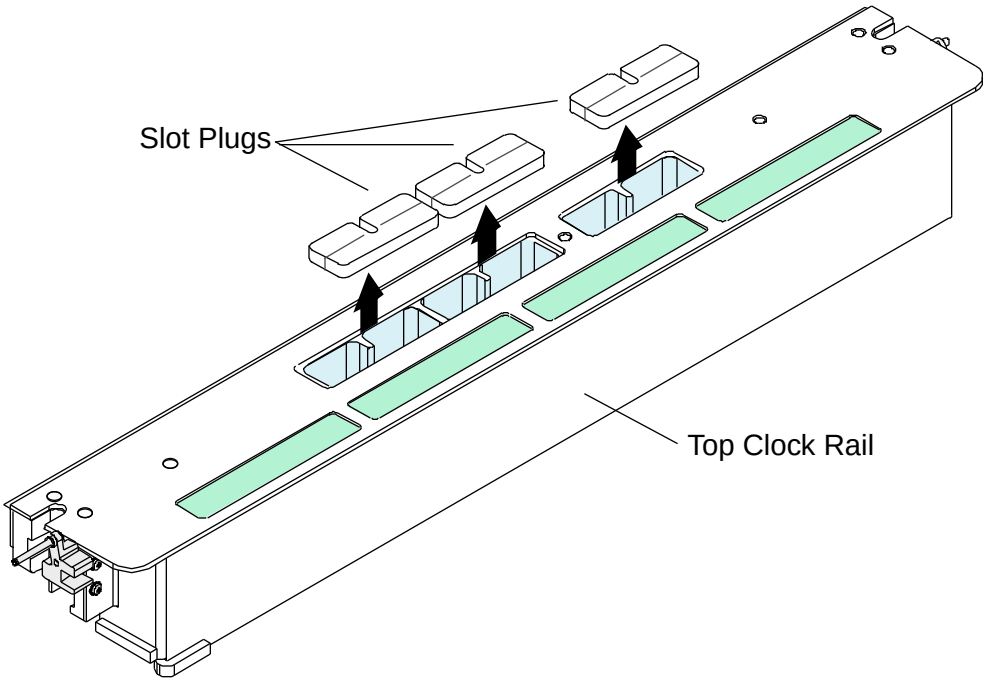

Remove Rail Connectors

Use the following procedure to loosen the connectors and pull them into the card cage, where you can access them easier:

NOTE: You may also pull the connectors into the wiremat and work there. If you do, deviate from this procedure as needed.

1. If your old system had only 1, 2, or 3 cabinets, remove rail connectors from the top clock rail in cabinet 0:

   a. *Loosen* the wires that connect to the clock rail by disconnecting the tie wraps that hold these wires to the wirerack. Refer to Figure 37. Most of the tie wraps are reusable; however, in some cases, you may need to use snippers to cut the tie wraps.

   NOTE: Be careful not to cut any wires or to let the wires uncoil.

Figure 37. Loosening the Wires

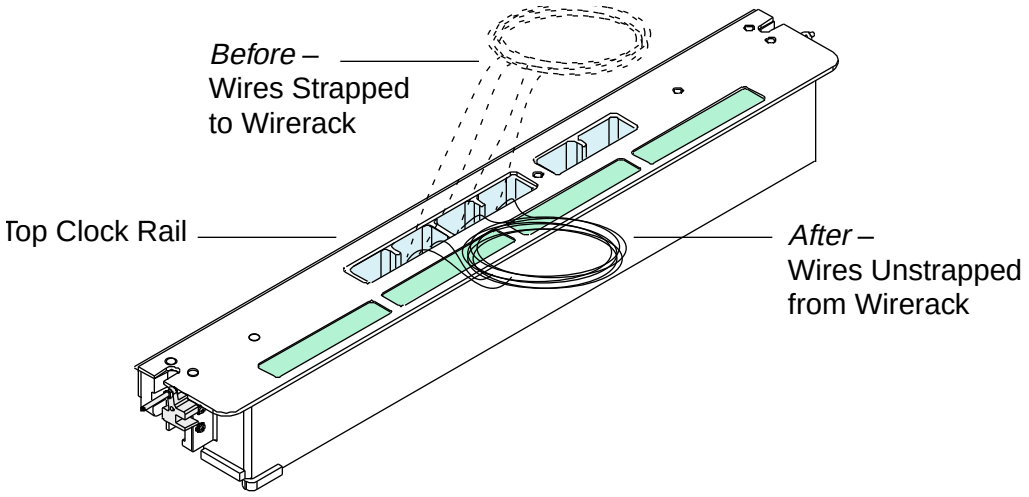

   b. Set a sheet of ESD-safe foam in the card cage to catch any screws, spacers, or tools that you might drop.

   c. From the inside of the card cage, use a 0.5-in. hex (allen) wrench to remove the hex screws and brass spacer from the rail connector (zae) that is closest to you. Refer to Figure 38 and Figure 39.

   NOTE: The first hex screw on connector zae has a brass spacer.

d. If your upgraded system will contain only 2 or 3 CRAY T3E cabinets:

Remove the hex screws from the next 3 connectors in the top rail: zaf, zag, and zah. Loosen but *do not* remove the last hex screw from connector zai. (In other words, leave connector zai secured by the hex screw that is closest to the power supplies.)

e. If your upgraded system will contain 4, 5, or 6 CRAY T3E cabinets:

Remove the hex screws from all of the other connectors in the top rail: zaf, zag, zah, and zai.

NOTE: The last hex screw on connector zai has a brass spacer.

f. Carefully slide the connector that is closest to you (zae) toward you and then down into the card cage. Repeat this step for the next 3 connectors (zaf, zag, zah) and for connector zai if applicable.

Figure 38. Clock Connector Locations

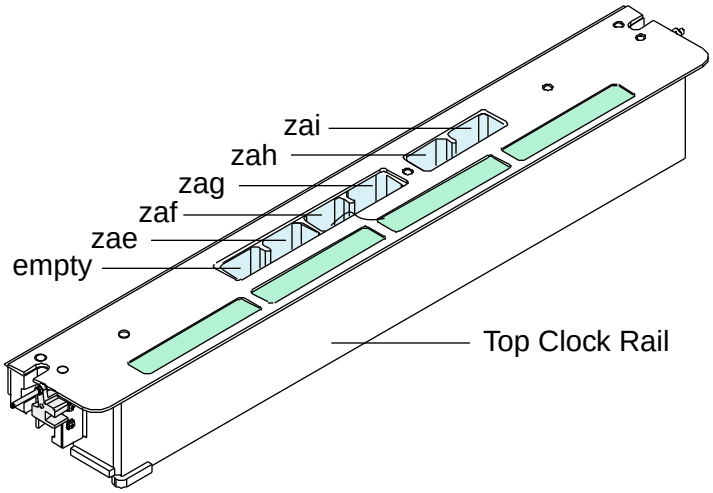

2. If your upgraded system will contain 4, 5, or 6 CRAY T3E cabinets:

Remove connectors from the top clock rail in cabinet 3 (the fourth cabinet). Use the method you used in Step 1; do not remove the last hex screw from connector zai.

3. If you add a fourth cabinet (cabinet 3) during the upgrade:

Remove rail connector yah from the *bottom* clock rail in both cabinet 0 and cabinet 3. Connector yah is the second closest connector to the power-supply end of the cabinet, as shown in Figure 40.

Figure 39. Removing Clock Rail Connectors

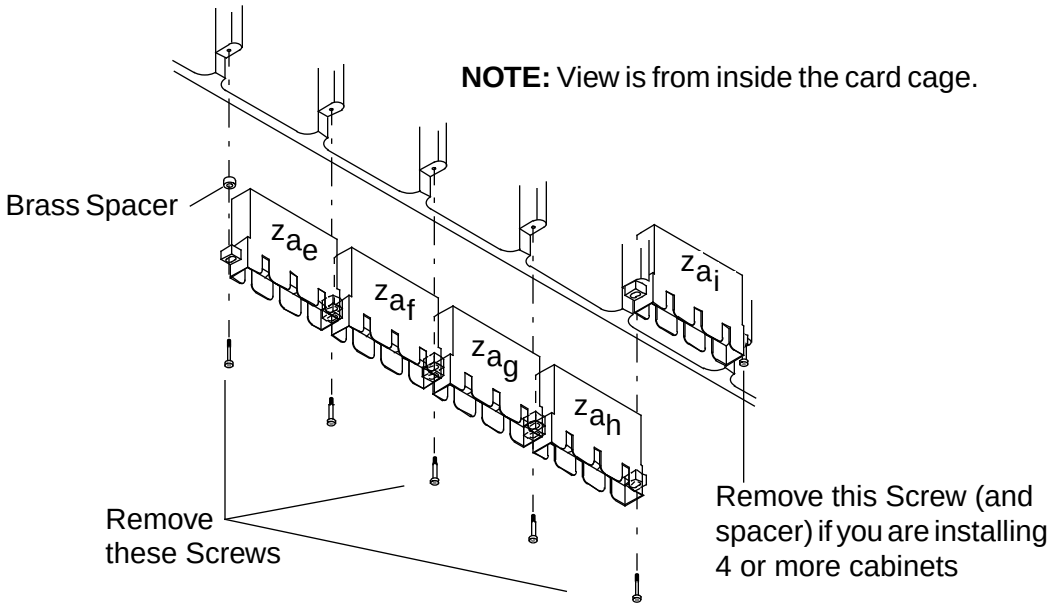

4. Optional: Remove the connector spring from any location where you removed a rail connector. (Remove them only if they come off easily.) To remove a spring, insert the tip of a pair of tweezers between the spring and the edge of the rail, then pry the spring loose as shown in Figure 41.

   NOTE: Removing the springs ensures that you do not accidently wrap a wire around the spring when you reinsert the connectors. If you guard against this, you may leave the springs on the rail.

5. Remove the springs, screws, and brass spacer(s) from the cabinet.

Figure 40. Connector Locations – Bottom Clock Rail

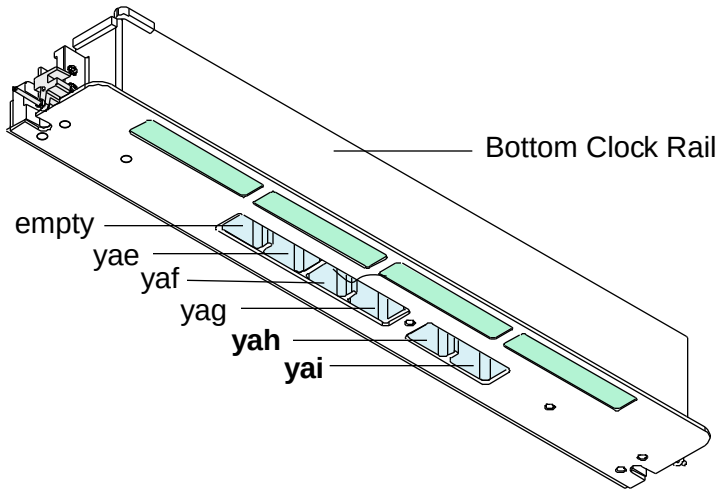

Figure 41. Removing a Connector Spring

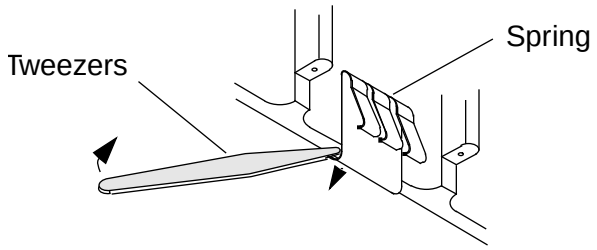

Remove Connector Pin Locks

Carefully remove the plastic pin lock (P/N 01775900) from the module side of each loose connector.

You may use a dental pick, or another sharp instrument, to pry the pin lock loose from the connector. At various locations around the pin lock, place the tip of the dental pick between the edge of the pin lock and the connector and pry the pin lock out of the connector as shown in Figure 42. Be careful not to damage any pins.

The pin locks tear easily; replace them as needed.

Figure 42. Removing a Connector Pin Lock

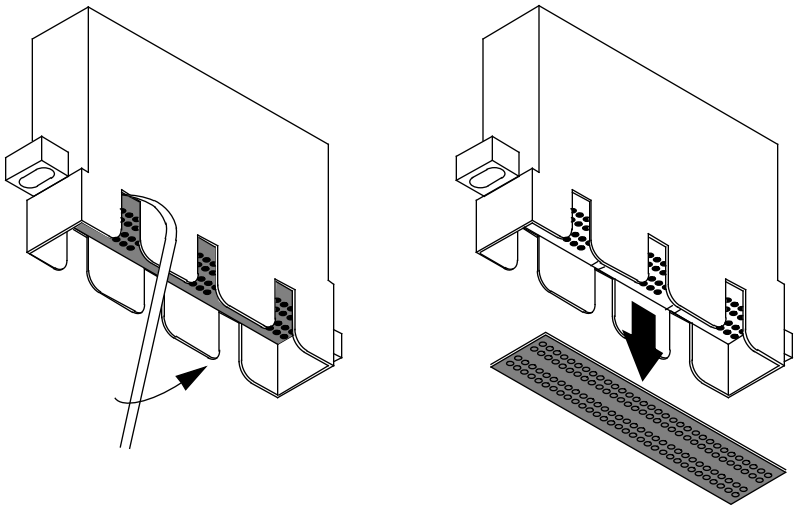

Complete the Internal Wiring

This section contains details on the intercabinet wiring that you must complete when you add one or more cabinets to an existing system.

You will make connections in the following order:

- Clock connections
- Boundary scan connections
- Torus connections

Table 6 on the following page provides an overview of the wires that you must connect when you add new CRAY T3E AC cabinets to your system. The following pages provide procedures that you must read before you attempt any of the connections.

Table 6. Wiring Overview

Connect the wires listed below?	Additional Cabinets			
	Cab 1; Cab 2; Cabs 1 & 2	Cabs 1, 2, & 3; Cabs 2 & 3 Cabs 2, 3, & 4	Cab 3; Cabs 3 & 4; 3, 4, & 5	Cab 4; Cab 5; Cabs 4 & 5
Clock wires from each new PEM to the clock	Yes; connect PEMs to clock module 0	Yes; connect PEMs in cabs 1 and/or 2 to clock module 0	No	Yes; connect PEMs to clock module 1
Clock sync wires between clock 0 and clock 1	No	Yes	Yes	No
Scan wires from clock 1 to clock 0 and scan master	No	Yes	Yes	No
Scan wire 15237701 from new PEMs to clock	Yes; connect PEMs to clock module 0	Yes; connect PEMs in cabs 1 and/or 2 to clock module 0	No	Yes; connect PEMs to clock module 1
Daisy chain wires	Yes; between cabs 0 and 1; between cabs 1 and 2	Yes; between cabs 0 and 1; between cabs 1 and 2	No	Yes; between cabs 3 and 4; between cabs 4 and 5
Cable 15237601 in Cabs 0, 1, and 2	Yes; reconnect to last PEM in cab 1 or 2	Yes; reconnect to last PEM in cab 2	No	Yes; reconnect to last PEM in system
Cab 3, slot 1 to cab 0, slot 1 (15237801 and 15237601)	No	Yes	Yes	No
Jumper (15223802) to end of chain 1	No	No	No	Yes; reconnect to last PEM in system
Torus (Rewire)	Yes	Yes	Yes	Yes

NOTE: The & symbol designates cabinets that are shipped as a unit, prejoined and prewired.

Example 1: If you have a 2-cabinet system that you must upgrade to 5 cabinets, and the 3 new cabinets ship separately (1 cabinet per shipping crate), then you must wire cabinet 2 (the third cabinet) as shown in the second column; you must wire cabinet 3 as shown in the fourth column; and you must wire cabinet 4 as shown in the fifth (last) column.

Example 2: If you have a 2-cabinet system that you must upgrade to 5 cabinets, and the 3 new cabinets ship as a prejoined unit (3 cabinets per shipping crate), then you must wire your system as shown in the third column, which lists connections for cabinets 2, 3, & 4.

Complete the Clock Connections

This section explains the clock connections that you must make when you add one or more cabinets. The procedure for connecting wires begins on page 82.

Background

The following list contains general information about the clock connections that you must make when you perform an upgrade:

- If you add a second and/or third cabinet:
  - You must make a direct *system* clock connection (P/N 15223701) from each PEM in the new cabinet(s) to the top rail of clock module 0, which is in slot 6 of cabinet 0.

    One end of each wire assembly is preinstalled in connector zah, pin 03, of each PEM rail. You will connect the other end to connector zag in the clock rail.
  - You must make a direct *GigaRing* clock connection (P/N 15224008) from each PEM in the new cabinet(s) to the top rail of clock module 0.

    One end of each wire assembly is preinstalled in connector zah, pin 07, of each PEM rail. You will connect the other end to connector zah in the clock rail.
- If you add a fifth and/or sixth cabinet:

  NOTE: If the fifth and sixth cabinets are bolted to the fourth cabinet (cabinet 3) during shipment, then you do not need to make the two connections listed below.
  - You must make a direct *system* clock connection (P/N 15223701) from each PEM in cabinet 4 and/or cabinet 5 to the top rail of clock module 1, which is in slot 6 of cabinet 3.

    One end of each wire assembly is preinstalled in connector zah, pin 03, of each PEM rail. You will connect the other end to connector zag in the clock rail.

- You must make a direct *GigaRing* clock connection (P/N 15224008) from each PEM in cabinet 4 and/or cabinet 5 to the top rail of clock module 1.

  One end of each wire assembly is preinstalled in connector zah, pin 07, of each PEM rail. You will connect the other end to connector zah in the clock rail.

- If you add a fourth cabinet (cabinet 3):

  - You must make a *master* system clock connection (P/N 15244601) between clock module 0 (connector zai, pin 07) and clock module 1 (connector zah, pin 03).

    One end of this wire assembly may be preinstalled in the top clock rail in cabinet 3.

  - You do not need to make clock connections between clock module 1 and the PEMs in cabinet 3. These wires are connected during shipment.

NOTE: The clock wires are labeled on each end with the slot, connector, and pin location as shown in Figure 43. If they are not labeled on both ends, then you must label them.

Figure 43. Example – Clock Wire Labels

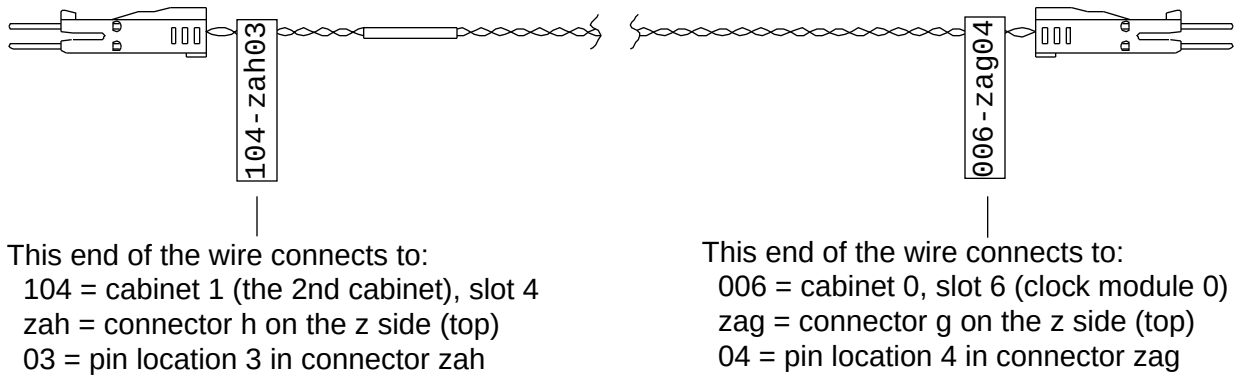

Figure 44 provides an overview of the clock connections in 6 fully-populated CRAY T3E AC cabinets. Figure 45 shows the clock connectors where the system clock and GigaRing clock wires connect.

Figure 44. Clock Connections

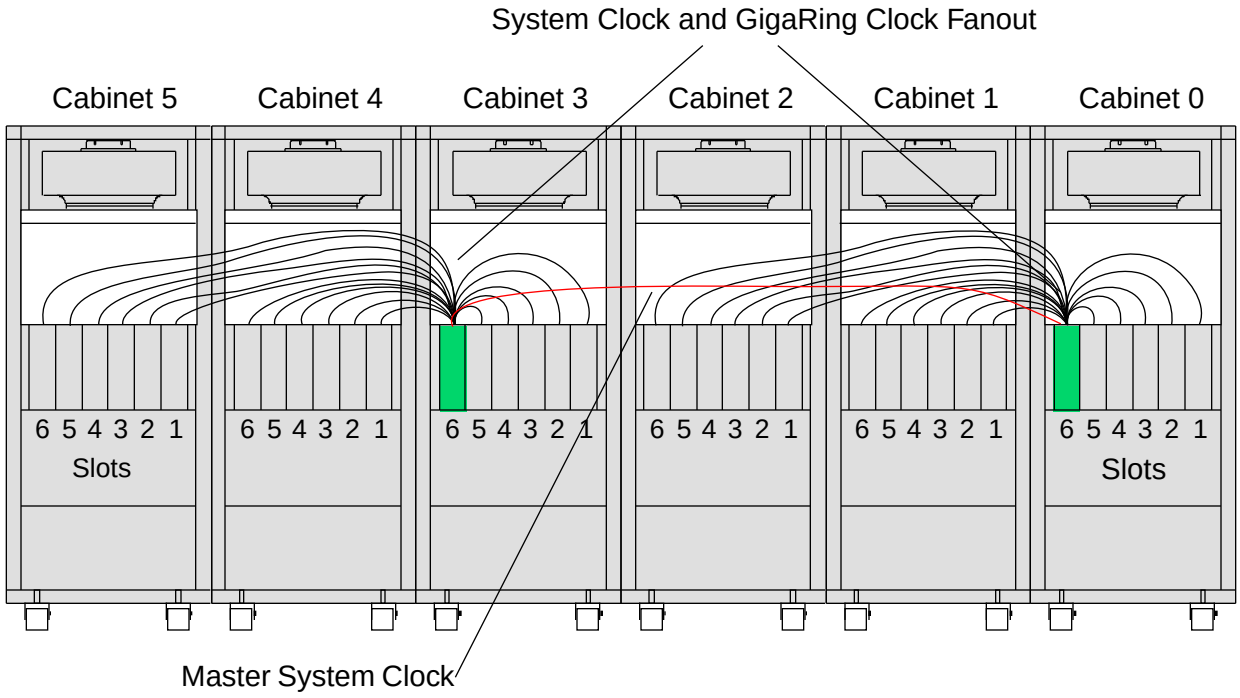

Figure 45. System and GigaRing Clock Wire Connections to Clock Rail

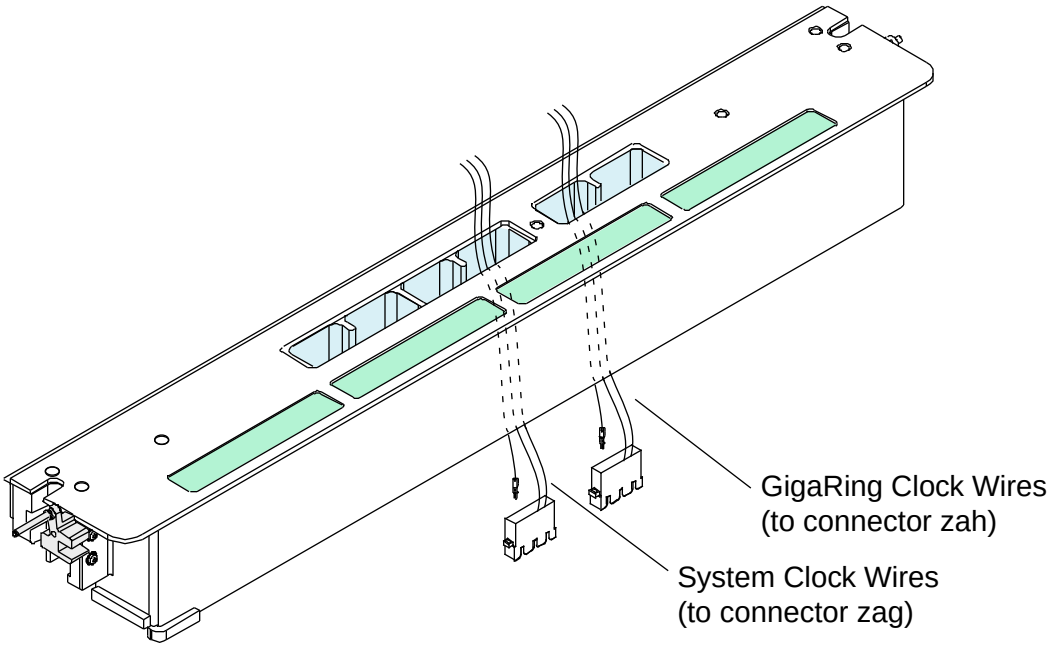

Procedure

1. Locate the disconnected clock wires and carefully route them from cabinet to cabinet. (You must route all cables that pass from cabinet to cabinet through the cable ducts above [or below] the modules.)

   To make individual clock wires easier to locate in the future, try to keep the clock wires from each cabinet separate. For example, do not bundle the clock wires from the PEMs in cabinet 2 with the clock wires from the PEMs in cabinet 1.

   Position the clock wires in relatively safe locations where they will be out of the way during the rest of the cabling procedure. Coil the wires, and use tie straps to secure the wires in the coil; trim the tie straps as appropriate. Do not secure the wires to the wireracks yet; instead, ensure that you leave some slack on the ends that connect to the clock rail. When you complete the wiring, you will remove slack and secure the wires to the wireracks.

   TIP: You may use one of the following techniques to help you pass wires between cabinets:

   1.) Place a piece of heat shrink (approximately 6-in. [15 cm] long) on the end of a thin metal rod (approximately 8-in. [20 cm] long). Insert the wire's 2-pin connector in the loose end of the heat shrink, then pass the rod through the cable trough. Next, go to the adjacent cabinet and pull the rod and wire into the cabinet.

   2.) Place the wire in a small, stiff plastic bag, then carefully pass the bag through the cable duct between cabinets.

   3.) Lay the laminated card, which shows connector locations, in the cable duct, and slide the wires across it.

2. Use the following steps to connect each clock wire:

   NOTE: Always double check the connections to ensure that the wires are in the proper locations and are not damaged. If you connect a 2-pin connector to the wrong rail connector location, refer to Appendix A for a removal procedure.

   a. Select a disconnected clock wire, and refer to its label to determine where you should connect it.

      You may also refer to the Engineering upgrade specification for source/destination information.

b. Route the wire to the appropriate rail connector. You will pass the wire through the rail and to the connector. Ensure that the wire passes through the same slot as the connector.

c. Working inside the card cage, determine the exact location (connector and pin slot) where you will connect the wire. (In most connectors, pin slot 1 is located in the corner that is marked with red, as shown in Figure 46.)

The rail connector contains two rows of pins: an even-numbered row and an odd-numbered row. Regardless of which row you insert the 2-pin connector in, ensure that you position the *curved* edge of the 2-pin connector toward the *outside* wall of the connector. You can only insert the 2-pin connector one way, as shown in Figure 47.

Figure 46. Pin Locations

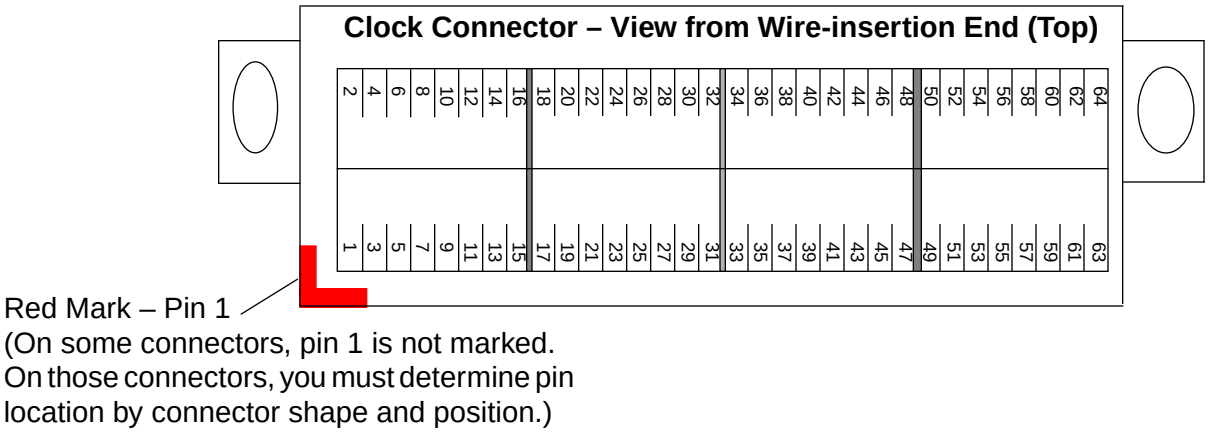

d. Use your fingers (or an appropriate tool such as hemostats) to gently push the 2-pin connector into the pin slot. Then carefully press the top of the 2-pin connector to fully insert it. Refer to Figure 48. (Figure 49 shows an alternate method of inserting a 2-pin connector.)

CAUTION

The clock wires are fragile. Ensure that you do not damage the wires when you insert them in the connector.

3. Check off each connection on the Engineering upgrade specification.

Figure 47. 2-pin Connector Position

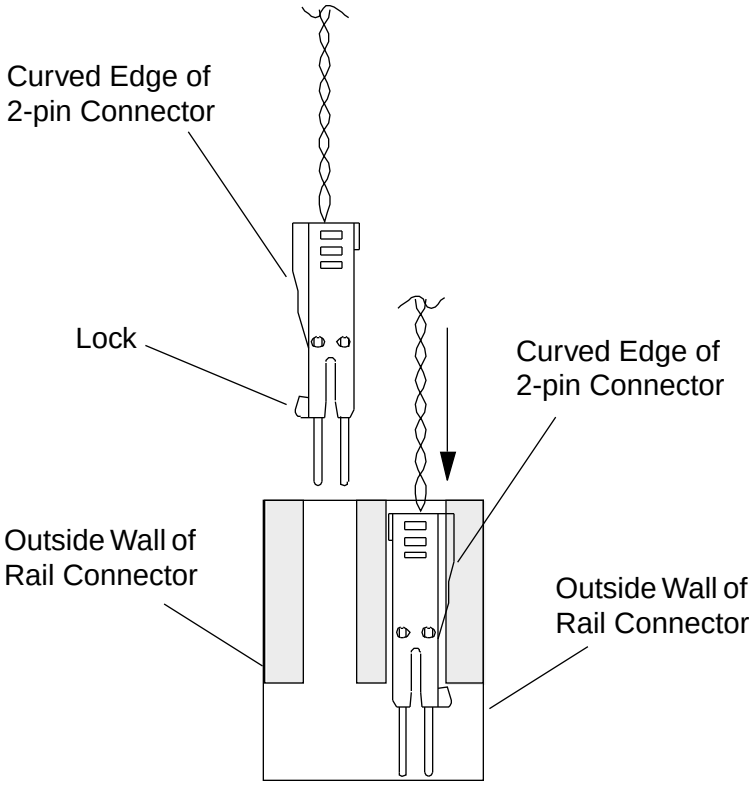

Figure 48. Wire Insertion

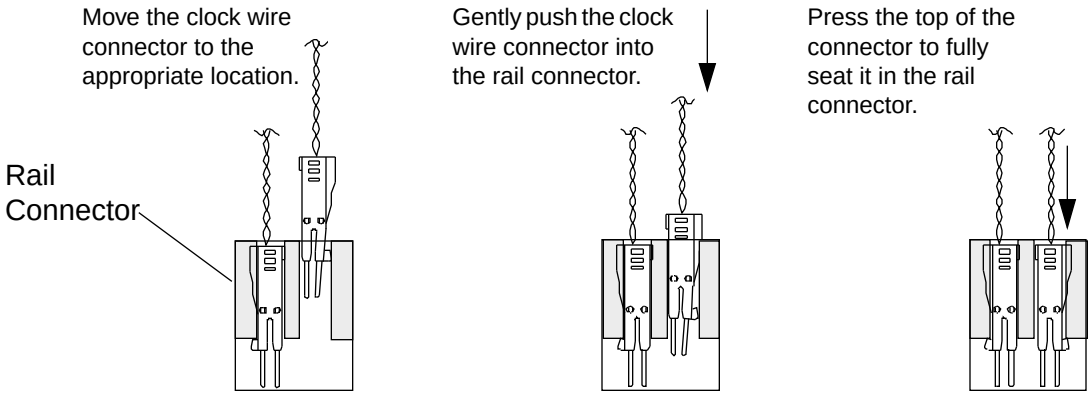

Figure 49. Wire Insertion with Wire Rod

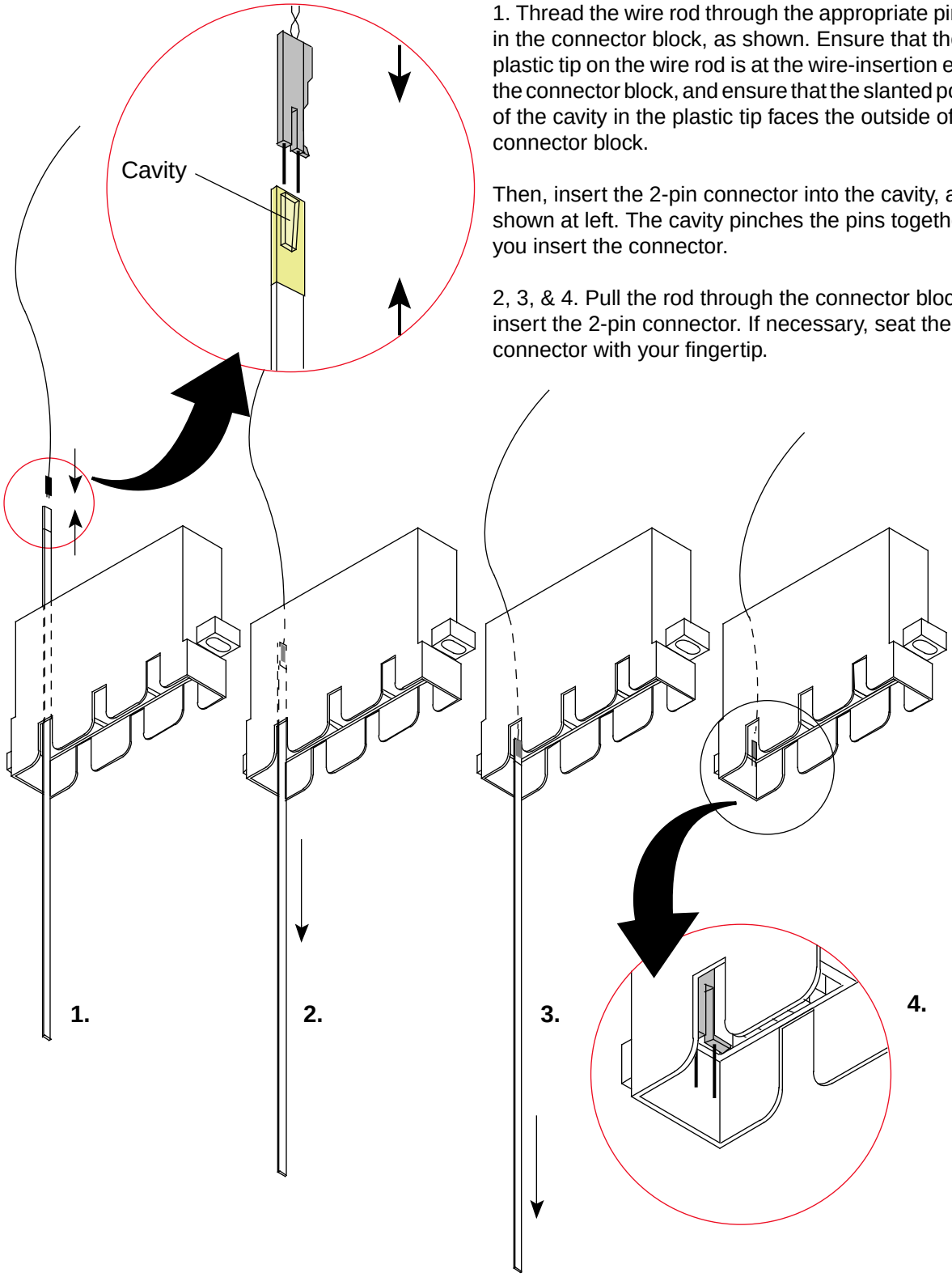

1. Thread the wire rod through the appropriate pin slot in the connector block, as shown. Ensure that the plastic tip on the wire rod is at the wire-insertion end of the connector block, and ensure that the slanted portion of the cavity in the plastic tip faces the outside of the connector block.

Then, insert the 2-pin connector into the cavity, as shown at left. The cavity pinches the pins together as you insert the connector.

2, 3, & 4. Pull the rod through the connector block to insert the 2-pin connector. If necessary, seat the connector with your fingertip.

Complete the Boundary Scan Connections

You must make some or all of the following boundary scan connections when you upgrade the system (the procedures for connecting wires begin on page 87):

- If you add a second and/or third cabinet:
  - Make two direct connections from each new PEM to clock module 0. (This connection carries the TCK/TMS fanout signals.)
  - Make a wiremat daisy chain connection between the last PEM (highest-numbered PEM) in each cabinet and the first PEM (lowest-numbered PEM) in the next cabinet. (TDOM > TDIM)

  NOTE: Do not make a daisy chain connection between the third and fourth cabinets (cabinet 2 and cabinet 3).

  - Make a wiremat connection between the scan master PEM and the last PEM in cabinet 1 or 2. In other words, link the scan master PEM to the last PEM in scan chain 0. (TDOF[0] < TDOM)
- If you add a fourth cabinet:
  - Make a direct connection between clock module 0 and clock module 1. (TCKC[1] > TCK FO)
  - Make a direct connection between the scan master PEM (PEM 0) and clock module 1. (TMSFb[1] > TMS FO)
  - Make two wiremat connections between the scan master PEM and PEM 17 (the PEM in slot 1 of cabinet 3). (TDIF[1] > TDIM and TDOF[1] < REPEATO)
- If you add a fifth and/or sixth cabinet:
  - Make two direct connections from each new PEM to clock module 1. (TCK/TMS fanout)
  - Make a wiremat daisy chain connection between the last PEM (highest-numbered PEM) in each cabinet and the first PEM (lowest-numbered PEM) in the next cabinet. (TDOM > TDIM)
  - Make a wiremat connection between PEM 17 (the PEM in slot 1 of cabinet 3) and the last PEM in cabinet 4 or 5. In other words, link PEM 17 to the last PEM in scan chain 1. (REPEATI < TDOM)

Connect the Point-to-point Wires – When You Add a Fourth Cabinet

1. Connect clock module 0 to clock module 1:

   a. Locate the edge-to-edge connection (P/N 15223701) that links clock module 0 to clock module 1. This wire carries the TCKC[1] > TCK fanout signal. It is probably connected to slot 6 in cabinet 3 (specifically, 306-zaf46). Figure 50 shows the wire. Figure 52 shows the location.

Figure 50. Edge-to-edge Connection – P/N 15223701

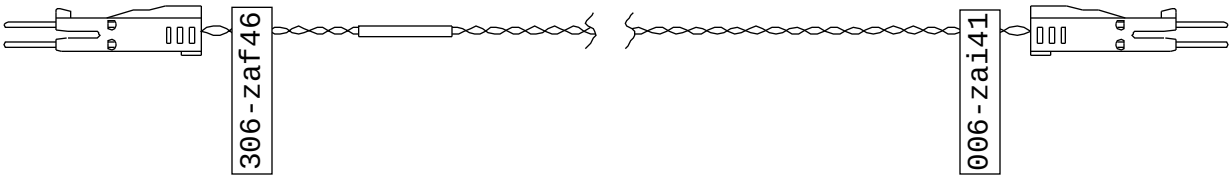

   b. Route the wire through the intercabinet cable troughs between cabinet 0 and cabinet 3.

   c. Connect the wire using the same technique that you used to connect clock wires.

2. Connect the scan master PEM to clock module 1:

   a. Locate the edge-to-edge connection (P/N 15224009) that links the scan master to clock module 1. This wire carries the TMSFb[1] > TMS fanout signal. It is probably connected to slot 6 in cabinet 3 (specifically, 306-zae61). Figure 51 shows the wire. Figure 52 shows the location.

Figure 51. Edge-to-edge Connection – P/N 15224009

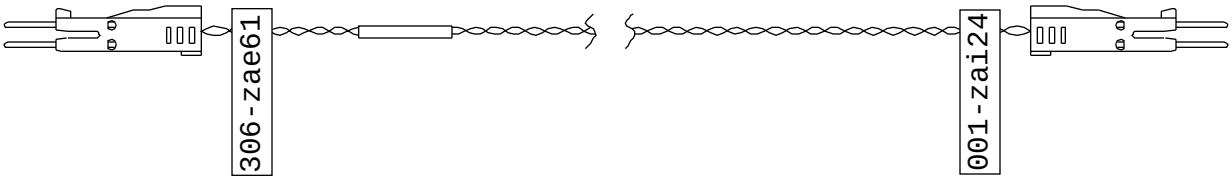

   b. Route the cable between cabinet 0 and cabinet 3.

   c. Connect the cable using the technique that you used to connect clock wires.

3. Check off the connections on the Engineering upgrade specification. The specification lists both direct connections, which look similar to this

006-zai41	15223701	306-zaf46	TCKC[1] > 1-68 TCK FO
001-zai24	15224009	306-zae61	TMSFb[1] > 1-34 TMS FO

Figure 52. Direct Boundary Scan Connections

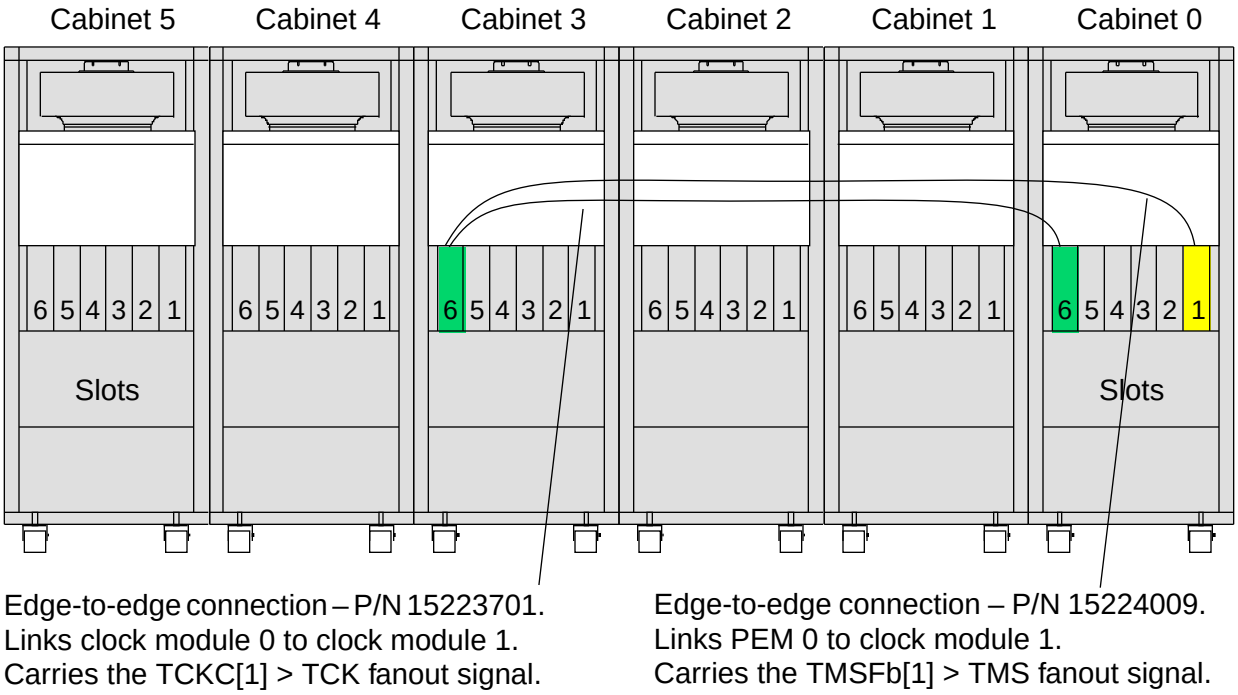

Connect the 4-pin Edge-to-Pigtail Cables – P/N 15237701

Complete this procedure when you add the following cabinets:

- A second and/or third cabinet
- A fifth and/or sixth cabinet

This procedure is *not required* when you add a fourth cabinet only, and it is not required when you add fourth and fifth cabinets (or fourth, fifth, and sixth cabinets) that are bolted together during shipment.

Background

Each top PEM rail comes with one edge-to-pigtail cable assembly (P/N 15237701). On one end of the cable, there are two 2-pin connectors, which connect to the associated clock module. On the other end, there is a 4-pin wiremat connector (refer to Figure 53), which connects to the PEM's pigtail in the wiremat.

Each cable carries TCK FO > TCKM and TMS FO > TMSMb signals from the clock module to the PEM. Clock module 0 supplies the signals to the PEMs in cabinets 0, 1, and 2. Clock module 1 supplies the signals to the PEMs in cabinets 3, 4, and 5, as shown in Figure 54. If your upgrade includes the addition of a fourth cabinet (cabinet 3), then any cables that connect to clock module 1 are probably prewired to clock module 1's top clock rail in cabinet 3.

Figure 53. Connecting the 4-pin Edge-to-Pigtail Cable

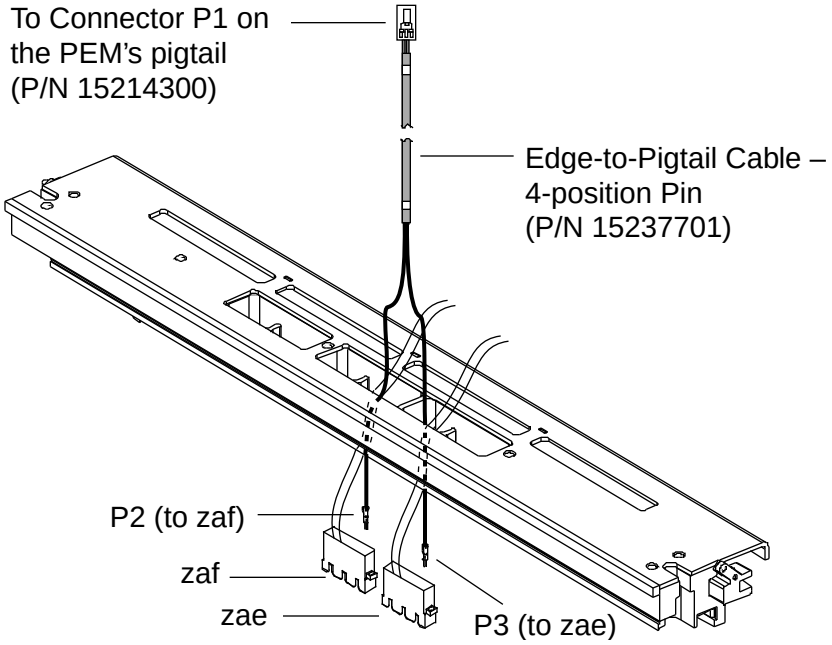

Figure 54. 4-pin Edge-to-pigtail Connections

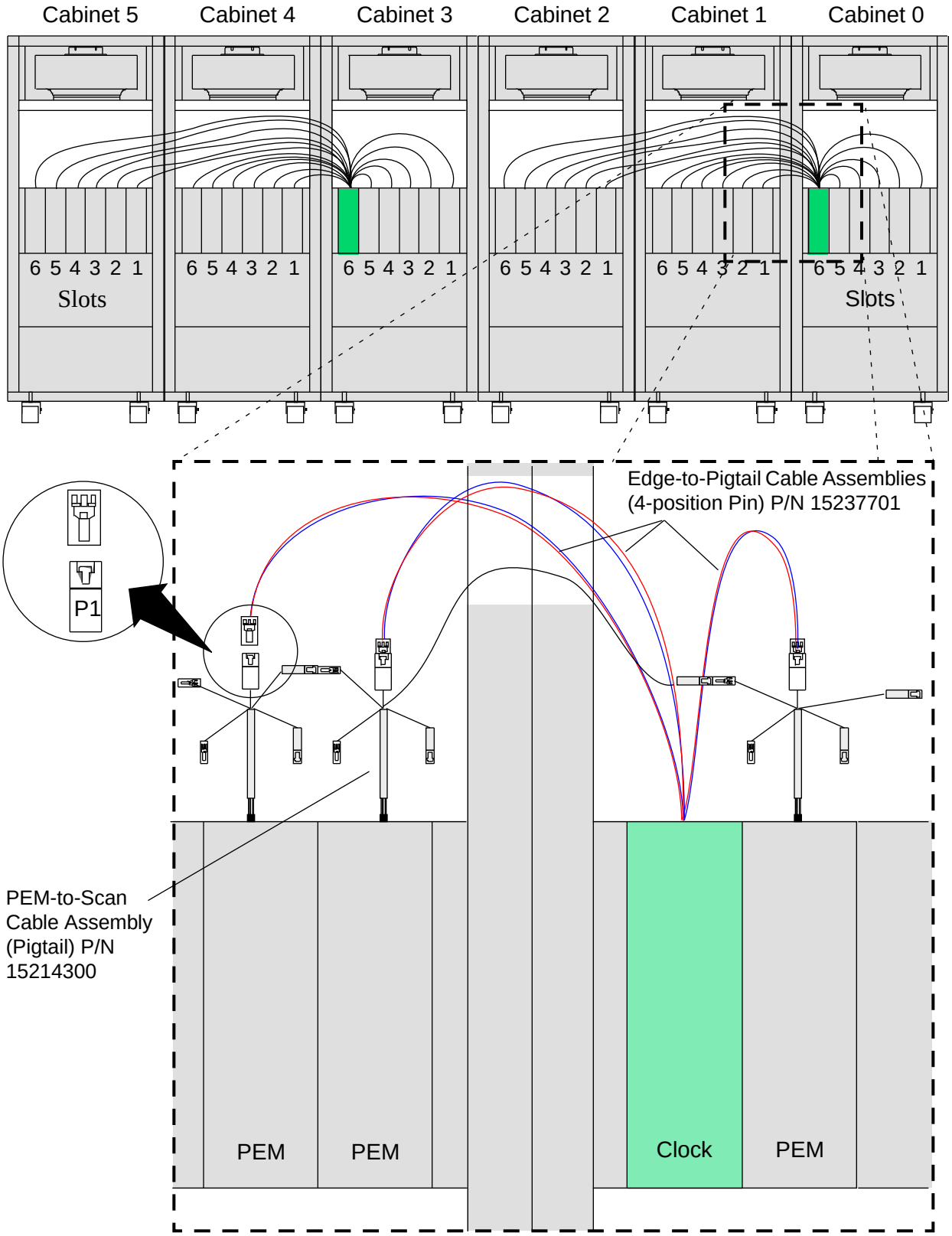

Procedure

1. Locate a disconnected cable (P/N 15237701). If you received cabinet 3, then the cables for cabinets 4 and 5 are probably connected to clock module 1's top rail. If you did not receive cabinet 3, then the cables are probably connected to the PEM's *pigtails* (PEM-to-scan cable assembly – P/N 15214300). The cables for cabinet 3 are completely installed.

2. Refer to the wire's labels to determine where you should connect it. (The wiremat connector may be marked with a pen.) If the cable is not labelled on both ends, refer to the upgrade specification for source and destination information, then label both ends of the cable. Label the 2-pin connectors with the cabinet, slot, and pin locations. Figure 55 shows the cable.

Figure 55. 4-pin Edge-to-Pigtail Cable – P/N 15237701

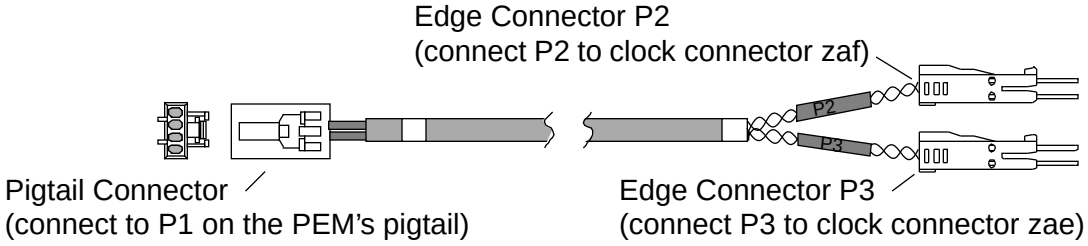

3. Route the cable between the top PEM rail and the top rail of the appropriate clock module.

4. Ensure that the cable is connected to connector P1 on the PEM's *pigtail* (P/N 15214300) as shown in Figure 54 on the previous page. Push the connectors together until they snap into place.

CAUTION
Handle the boundary scan wires carefully. They are fragile and can damage from excessive force or strain.

5. Using the technique you used to connect clock wires, connect the cable's 2-pin connectors to the top clock rail. Refer to the wire labels to determine where you should connect each 2-pin connector. (One 2-pin connector plugs into clock connector zaf, and the other 2-pin connector plugs into connector zae as shown in Figure 55.)

6. Check off the connection on the Engineering upgrade specification. The specification lists both direct connections, which look similar to this:

   006-zaf*42* 15237701, P2 *003*-zah52 15214300, red 1-68 TCK FO > TCKM
   006-zae*53* , P3 *003*-zah51 , blue 1-34 TMS FO > TBSMb

7. Repeat this procedure for each applicable PEM in the system.

Connect the Daisy Chain

Complete this procedure when you add the following cabinets:

- A second and/or third cabinet
- A fifth and/or sixth cabinet

This procedure is *not required* when you add a fourth cabinet only, and it is not required when you add fourth and fifth cabinets (or fourth, fifth, and sixth cabinets) that are bolted together during shipment.

Background

In a connected system, the PEMs in cabinets 0, 1, and 2 are daisy chained and the PEMs in cabinets 3, 4, and 5 are daisy chained, as shown in Figure 56. Therefore, you must complete these connections on site.

Figure 56. TDOM > TDIM Daisy Chain Connection – Between Cabinets

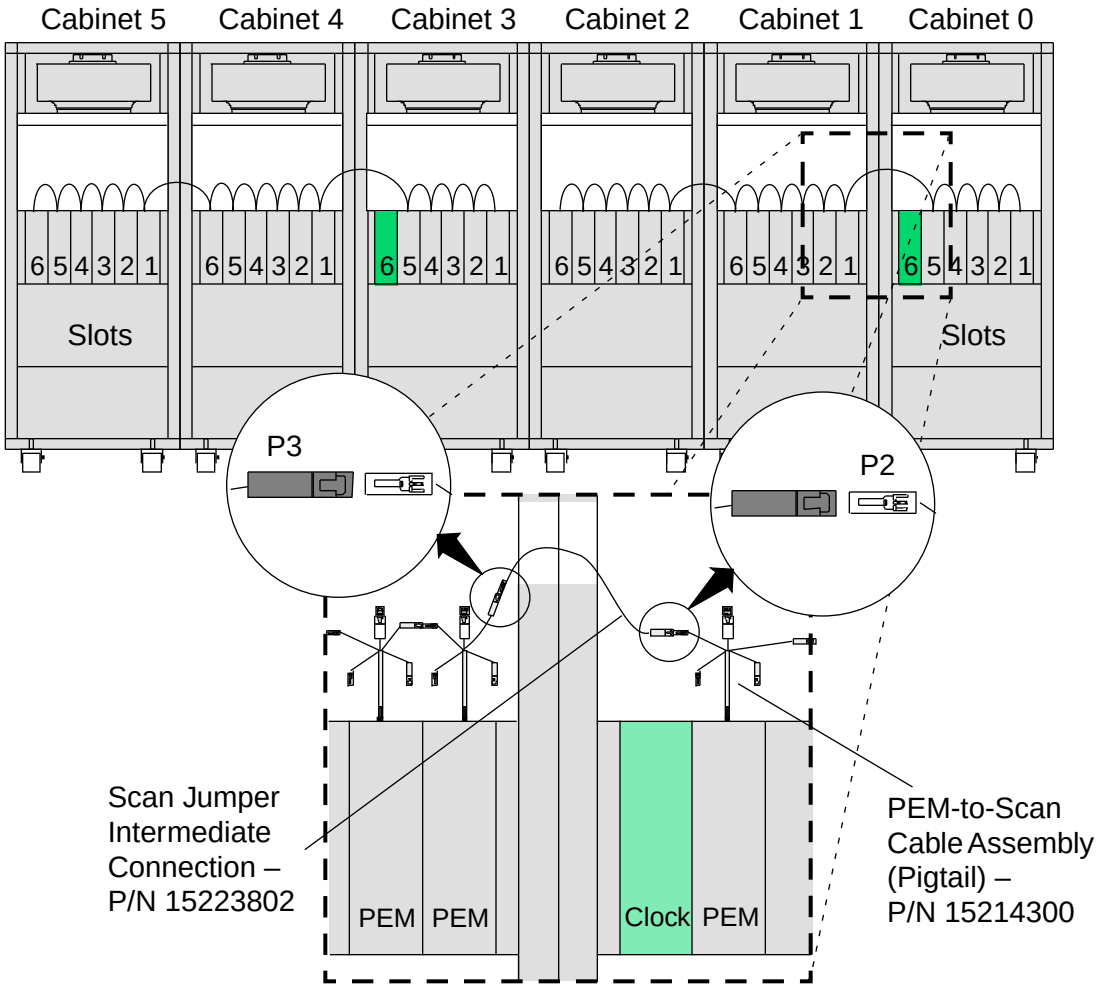

Procedure

Use the following procedure to connect the daisy chain between cabinets that you bolt together – except between cabinet 2 and cabinet 3 (the third and fourth cabinets):

1. Locate connector P2 (marked black) on the pigtail (P/N 15214300) of the last PEM in the lower-numbered cabinet (for example, the PEM in slot 6 of cabinet 1). Then locate connector P3 (marked white) on the pigtail of the first PEM in the next cabinet (for example, the PEM in slot 1 of cabinet 2).

   You will connect a scan jumper intermediate connection (P/N 15223802) between connector P2 and connector P3. This jumper wire may already be connected to P2 or P3.

2. If the lower-numbered cabinet was part of the old system (pre-upgrade), disconnect the wire that connects to P2 on the last PEM in the cabinet. (You will reconnect this wire during a later procedure. Position it where you can locate it easily.)

3. Carefully route the jumper wire (P/N 15223802) through the intercabinet cable trough and into the next cabinet.

4. Connect the jumper wire (P/N 15223802) to the appropriate connector (P2 or P3). Push the connectors together until they snap into place.

CAUTION
Handle the boundary scan wires carefully. They are fragile and can damage from excessive force or strain.

5. Check off the connections on the Engineering upgrade specification. On the specification, the connections look similar to this:

   ....
   ....
   005-zah54 15214300, black 15223802 *101*-zah53 , white TDOM > TDIM

6. Repeat this procedure between each pair of cabinets in the system, as needed – except between cabinet 2 and cabinet 3 (the third and fourth cabinets).

Reconnect Cable 15237601 (TDOF[0] < TDOM)

Complete this procedure if you add a second and/or third cabinet. The procedure for connecting the cables is on page 96.

Background

The PEMs in cabinets 0, 1, and 2 are all on a single daisy chain. The last PEM in this daisy chain connects back to the scan master PEM (in slot 1 of cabinet 0) via a 2-position socket, edge-to-pigtail cable assembly (P/N 15237601). Cable 15237601 carries TDOF[0] < TDOM signals. When you add another cabinet, you must reconnect cable 15237601 to the last PEM in the upgraded system.

Figure 57. Reconnecting Cable 15237601 – Upgrade to Three Cabinets

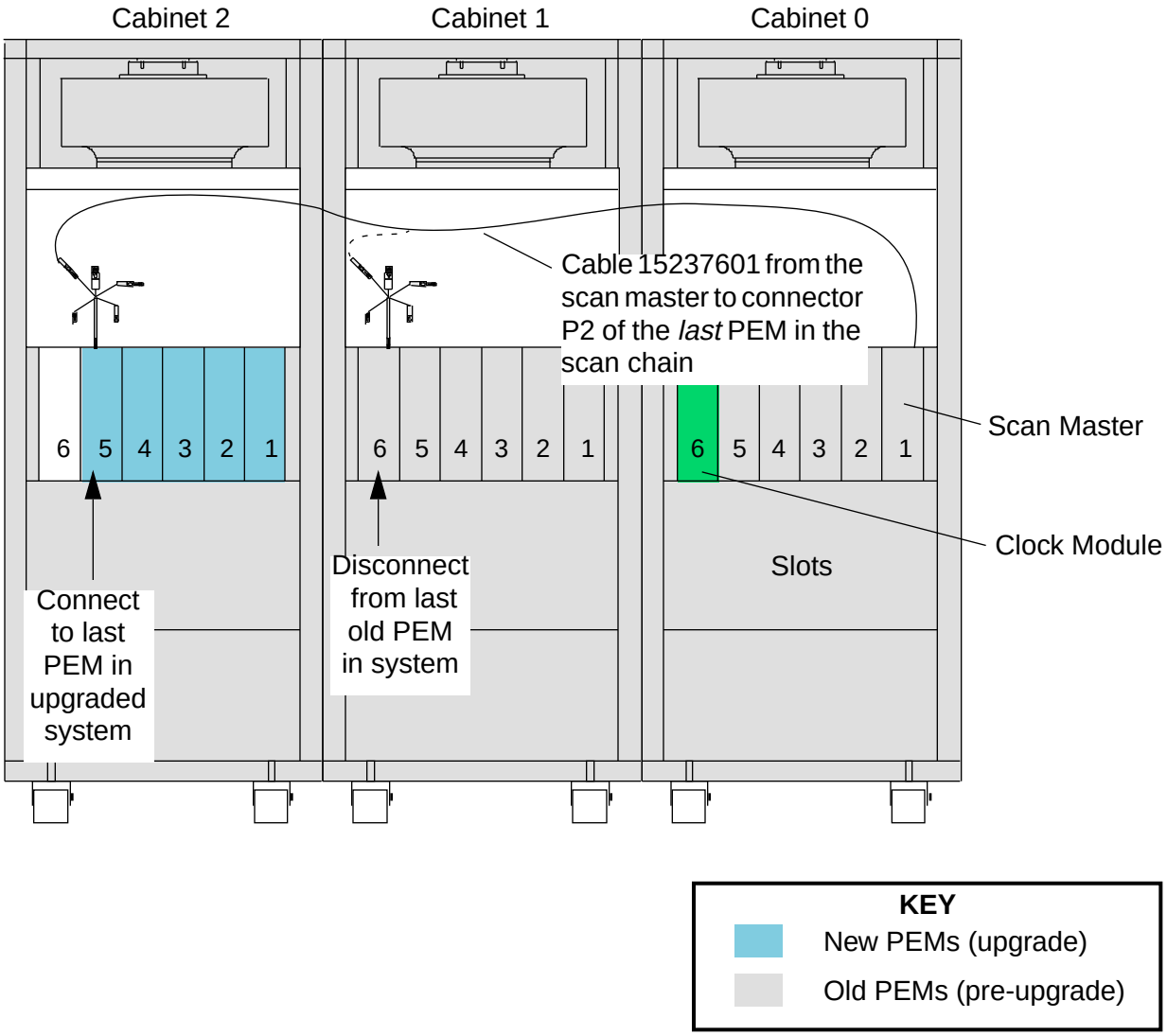

Procedure

Complete the following procedure if you add a second and/or third cabinet:

1. Locate cable 15237601 (you disconnected this cable when you performed the previous daisy-chaining procedure). Figure 58 shows the cable.

   a. Go to the top rail of the last old PEM in the pre-upgrade system.

   b. Locate cable 15237601, which was previously connected to P2 on the pigtail (15214300) of the last old PEM.

Figure 58. 2-position Socket, Edge-to-Pigtail Cable – P/N 15237601

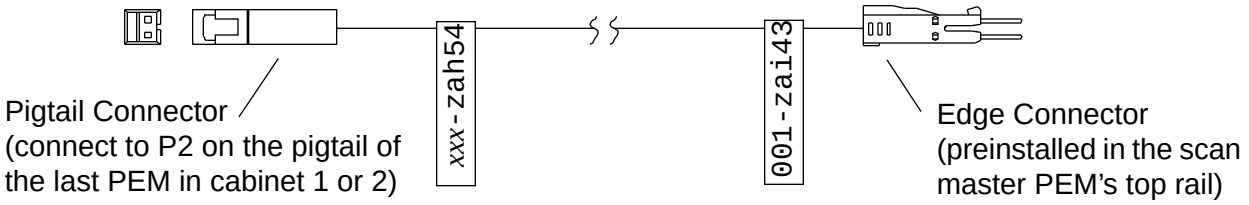

2. Relabel the wiremat end of the cable.

3. Route the cable through the intercabinet cable trough(s) and to the last new PEM in scan chain 0 (cabinet 2 or cabinet 3 only).

4. Connect the cable to connector P2 (marked black) on the last PEM's pigtail. Push the connectors together until they snap into place.

CAUTION
Handle the boundary scan wires carefully. They are fragile and can damage from excessive force or strain.

5. Secure the cable in the wirerack.

6. Check off the *dis*connection and the connection on the Engineering upgrade specification. The information looks similar to this:

   Disconnect

   001-zai43 15237601 *005*-zah54 15214300 , black TDOF[0] < TDOM

   Connect
   ....
   001-zai43 15237601 *106*-zah54 , black TDOF[0] < TDOM

Connect Cabinet 3 to the Scan Master

Complete this procedure if you add a fourth cabinet. The procedure for connecting the cables is on page 99.

Background

The PEMs in cabinets 3, 4, and 5 are all on scan chain 1. Scan chain 1 connects to the scan master via 2 cable connections between slot 1 of cabinet 0 (scan master PEM) and slot 1 of cabinet 3 (PEM 17). Figure 59 shows the connections.

Cable 15237801 carries the TDIF[1] > TDIM signal between the scan master and scan chain 1. Cable 15237801 carries the TDOF[1] < REPEATO signal between the scan master and scan chain 1.

Figure 59. Boundary Scan Connections to Cabinet 3, Slot 1

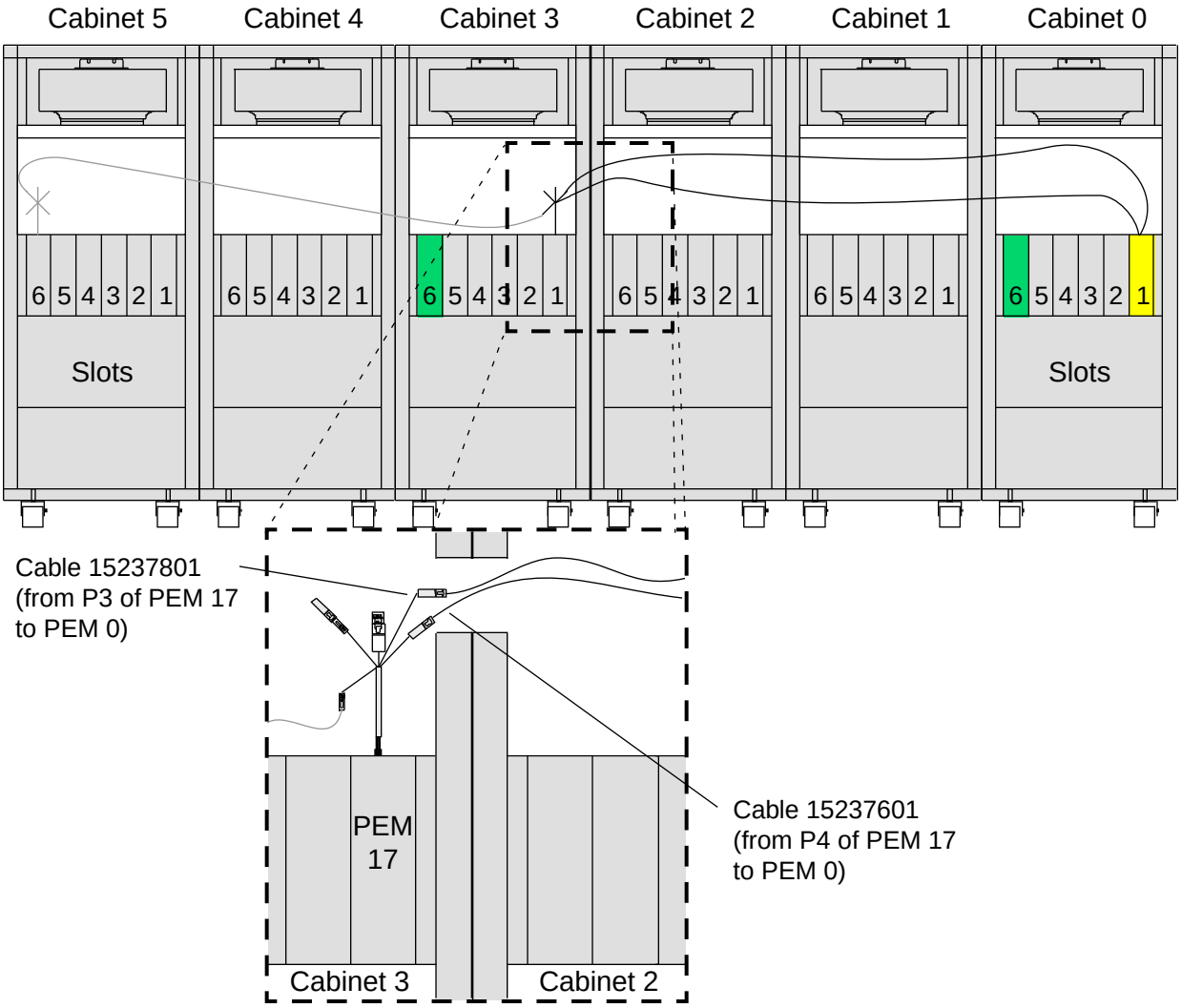

Procedure

1. Locate cable 15237801.

   a. Determine whether the cable is connected to connector P3 on PEM 17's pigtail (P/N 15214300), in slot 1 of cabinet 3.

   b. If the cable is not connected to PEM 17's pigtail, locate cable 15237801 among the unconnected cables that were shipped in a separate box.

2. Refer to the cable labels to determine where you should connect it. If the cable is not labelled on both ends, then label it. (One end connects to location 001-zai04 in the scan master PEM's top rail, and the other connects to P3 in PEM 17's pigtail (P3 is, in turn, wired to location 301-zah53 in PEM 17's top rail). Figure 60 shows the cable.

Figure 60. 2-position Pin, Edge-to-Pigtail Cable – P/N 15237801

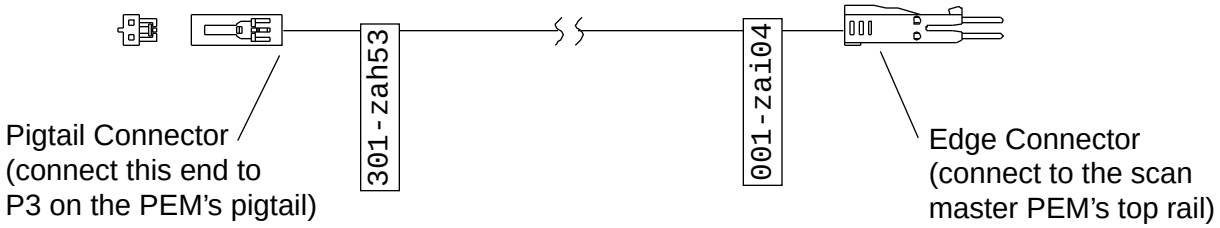

3. Route the cable through the intercabinet cable troughs between cabinet 0 and cabinet 3.

CAUTION
Handle the boundary scan wires carefully. They are fragile and can damage from excessive force or strain.

4. Using the technique you used to connect clock wires, connect the cable's 2-pin connector to location 001-zai04 in the scan master PEM's top rail.

5. If necessary, connect the cable to connector P3 (marked white) on the pigtail of the PEM in slot 1 of cabinet 3. Push the connectors together until they snap into place.

6. Secure the cable in the wirerack.

7. Check off the connection on the Engineering upgrade specification. The information looks similar to this:

   001-zai04 15237801 301-zah53 white TDIF[1] > TDIM

8. Locate cable 15237601.

   a. Determine whether the cable is connected to connector P4 on PEM 17's pigtail (P/N 15214300), in slot 1 of cabinet 3.

   b. If the cable is not connected to PEM 17's pigtail, locate cable 15237601 among the unconnected cables that were shipped in a separate box.

9. Refer to the cable labels to determine where you should connect it. If the cable is not labelled on both ends, then label it. (One end connects to location 001-zai44 in the scan master PEM's top rail, and the other connects to P4 in PEM 17's pigtail (P4 is, in turn, wired to location 301-zah57 in PEM 17's top rail). Figure 61 shows the cable.

Figure 61. 2-position Socket, Edge-to-Pigtail Cable – P/N 15237601

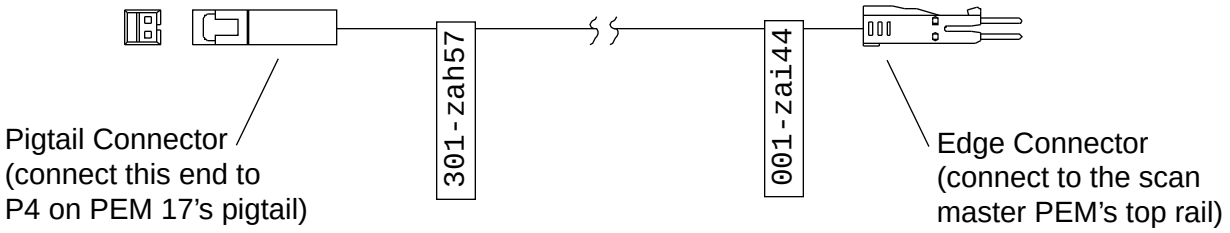

10. Route the cable through the intercabinet cable troughs between cabinet 0 and cabinet 3.

11. Using the technique you used to connect clock wires, connect the cable's 2-pin connector to location 001-zai44 in the scan master PEM's top rail.

12. Connect the cable to connector P4 (marked green) on the pigtail of the PEM in slot 1 of cabinet 3. Push the connectors together until they snap into place.

13. Secure the cable in the wirerack.

14. Check off the connection on the Engineering upgrade specification. The information looks similar to this:

    001-zai44 15237601 301-zah57 green TDOF[1] > REPEATO

Reconnect the Jumper Wire (REPEATI < TDOM)

Complete this procedure if you add a fifth and/or sixth cabinet, unless they were shipped bolted to the fourth cabinet (cabinet 3). The procedure for connecting the jumper wire is on page 102.

Background

The PEMs in cabinets 3, 4, and 5 are all on scan chain 1. The last PEM in the scan chain connects to the first PEM in the chain (PEM 17) via a jumper wire (scan jumper intermediate connection – P/N 15223802). The jumper wire carries REPEATI < TDOM signals.

If you add a fifth and/or sixth cabinet, you must reconnect the jumper wire to the last PEM in the upgraded system.

Figure 62. Reconnecting the Jumper Wire to Cabinet 5 or 6

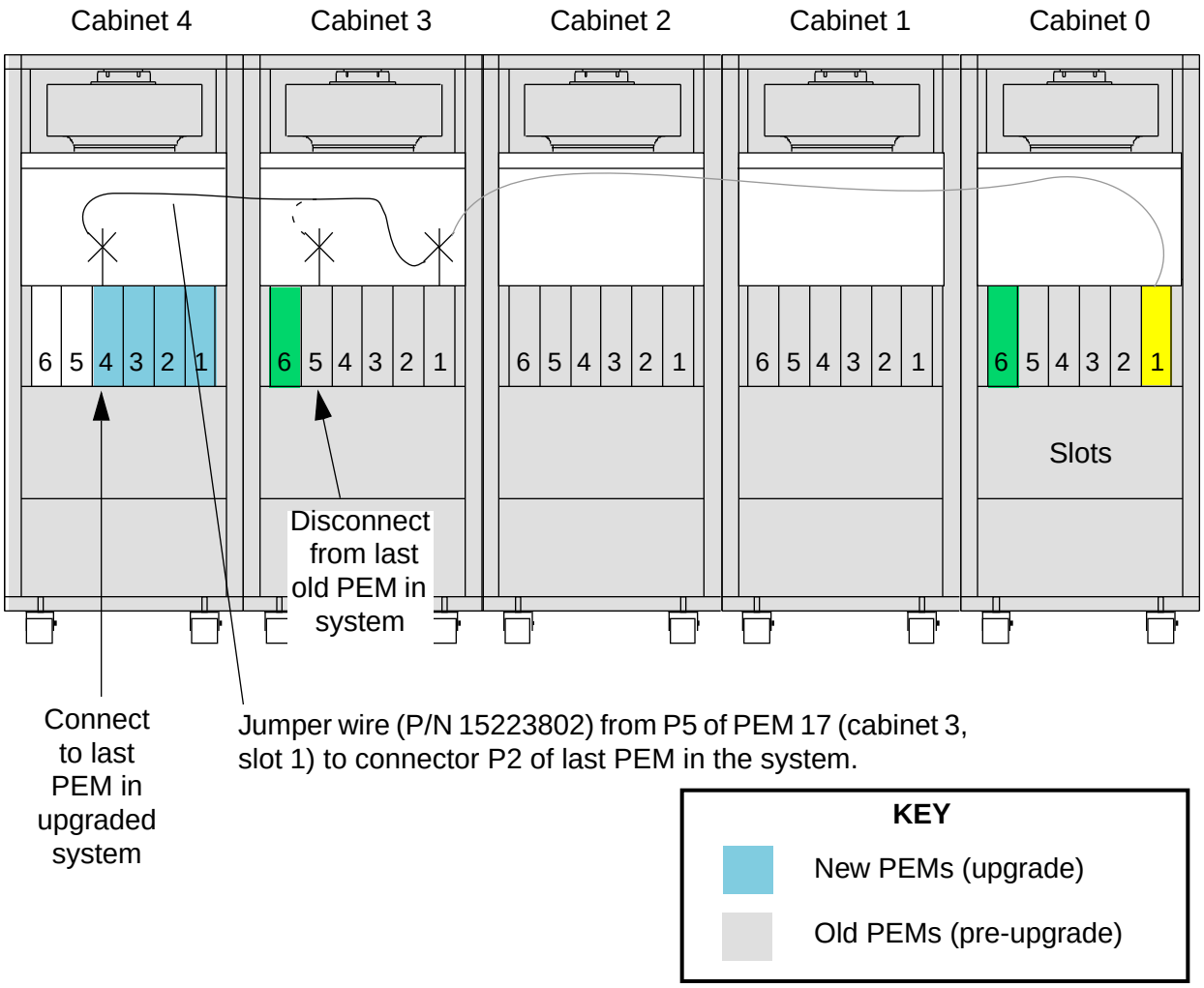

Procedure

1. Locate the jumper wire (P/N 15223802). Figure 63 shows the jumper wire.

Figure 63. Scan Jumper/Intermediate Connection – P/N 15223802

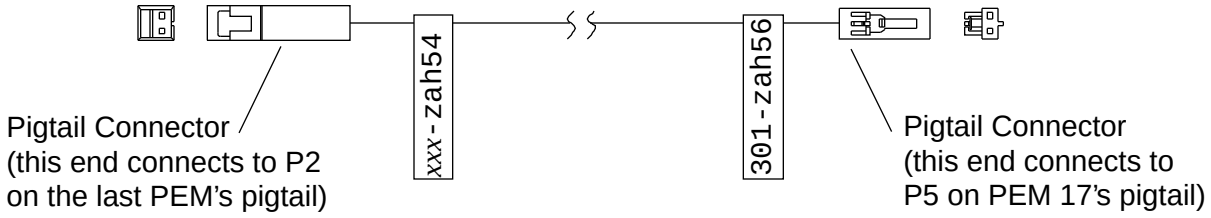

If you did not add a fourth cabinet (cabinet 3) during the upgrade, the jumper wire was connected to P2 (marked black) on the pigtail of the last old PEM in the pre-upgraded system. You disconnected this wire during the daisy chain procedure.

If you added a fourth cabinet (cabinet 3) during the upgrade, the jumper wire is in one of the following locations:

Connected to P5 (marked yellow) on PEM 17's pigtail, cabinet 3 slot 1

Connected to P2 (marked black) on the pigtail of the last PEM in the system

Among the unconnected cables that were shipped in a separate box

2. If necessary, label (or relabel) the jumper wire.

3. Route the jumper wire through the intercabinet cable trough(s) between cabinet 3 and the last cabinet in the system.

CAUTION
Handle the boundary scan wires carefully. They are fragile and can damage from excessive force or strain.

4. Connect the wire to the appropriate pigtail connector (either connector P5 on PEM 17's pigtail or connector P2 on the last PEM's pigtail). Push the connectors together until they snap into place.

5. Secure the cable in the wirerack.

6. Check off the *dis*connection and the connection on the Engineering upgrade specification. The information may look similar to this on the specification:

Disconnect

301-zah56 15214300, yellow 15223802 *305*-zah54 15214300 , black REPEATI < TDOM

Connect
....
....
301-zah56 15214300, yellow 15223802 *406*-zah54 , black REPEATI < TDOM
....

Reinstall the Connectors in the Top Clock Rail

When you complete the clock and boundary scan wiring, reinstall the connectors that you removed from the rails.

1. Insert plastic pin locks (P/N 01775900) in any connector blocks that do not contain them and ensure that the pins are straight.

   a. Use your fingers to position the pin lock on the connector. Place the rough side toward the pins and the smooth side toward the module.

   b. Use a dental tool to fully insert the pin lock in the connector. Press the curve of the dental tool against the center of the pin lock, between the 2 sets of pins. Then gently slide the dental tool back and forth as you push the pin lock into position. Refer to Figure 64.

   c. Ensure that the pins are straight. (If necessary, use a 0.3-mm mechanical pencil to straighten a misaligned pin. Slip the tip of the pencil over the pin and gently bend the pin into the proper position.)

Figure 64. Inserting and Seating a Plastic Connector Pin Lock

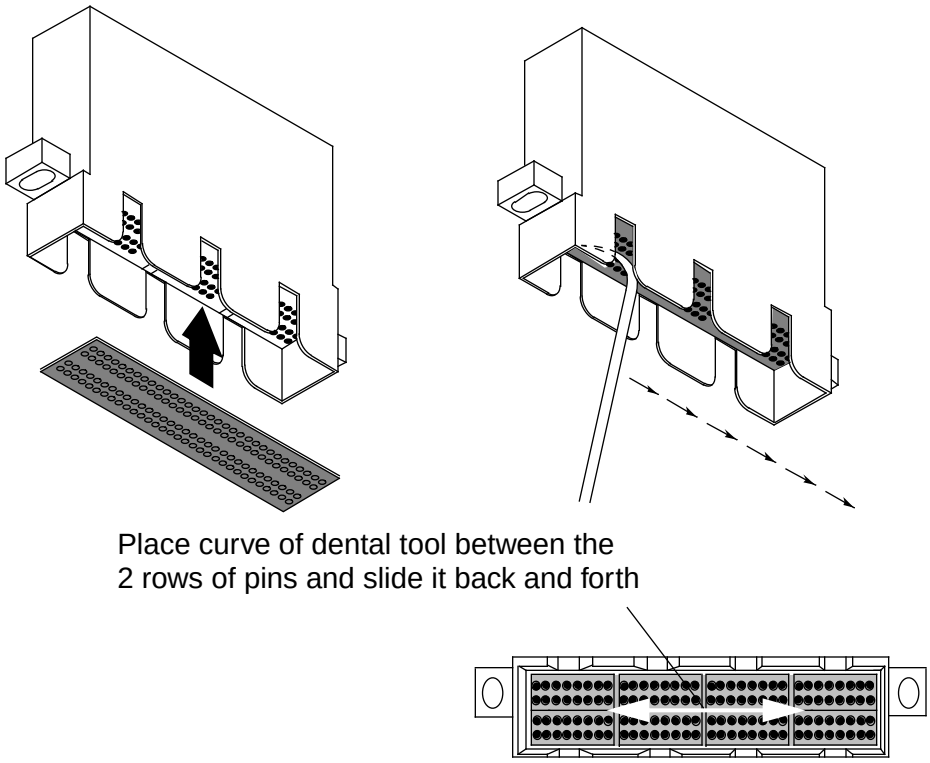

2. Install each connector in the top clock rail. Start with the connector that is closest to the power supplies, then work your way to connector zae.

Figure 65. Installing Clock Rail Connectors

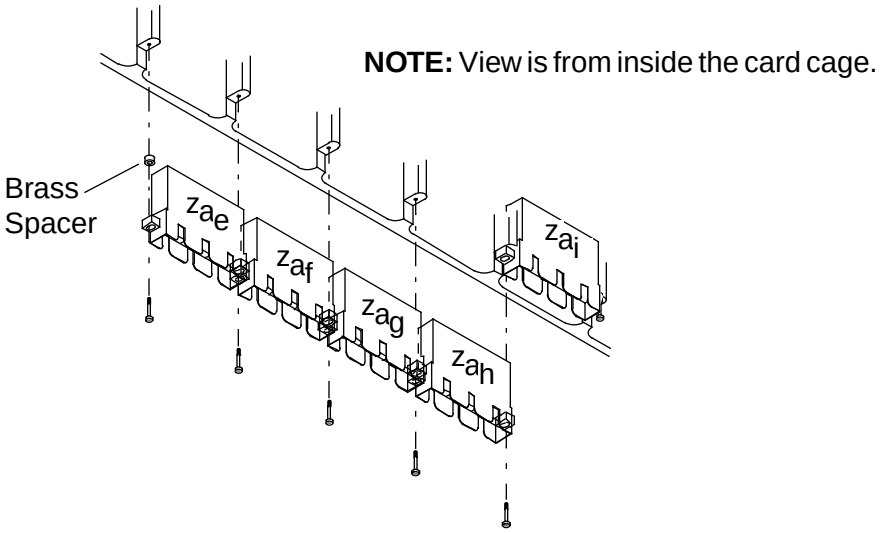

   a. Carefully insert the connector in the rail. Ensure that the connector is properly oriented and that the wires are not tangled with the spring (if the spring is installed).

   b. Insert the farthest hex screw (the hex screw that is closer to the power supplies). Do not tighten the screw.

   c. Repeat Step a and Step b for all of the connectors that you removed, then install the last hex screw and brass spacer in connector zae.

   d. Tighten all of the hex screws to 15 in-oz.

3. If you removed them earlier, install the connector springs and center them in relation to the connector blocks.

4. Push each connector toward its spring to ensure that the connector moves laterally, then springs back into position.

5. Once again, ensure that the wires are not tangled with the spring.

6. Repeat Step 2 through Step 5 for any other rails where you removed connectors.

7. Insert the foam plugs in the connector slots.

8. Use tie wraps to secure the wires in the wiremat.

Rewire the Torus

When you complete the clock and boundary scan connections, you are ready to complete the torus wiring. The Engineering upgrade specification lists the torus cables that you must disconnect and connect to complete the upgrade.

Background

Figure 66 is a simplified illustration of torus connections. It shows how both ribbon cables from one torus cable assembly connect to both ribbon cables from another assembly. The two ribbon cables on a cable assembly always connect to a single cable assembly.

Figure 66. Example of Torus Connections

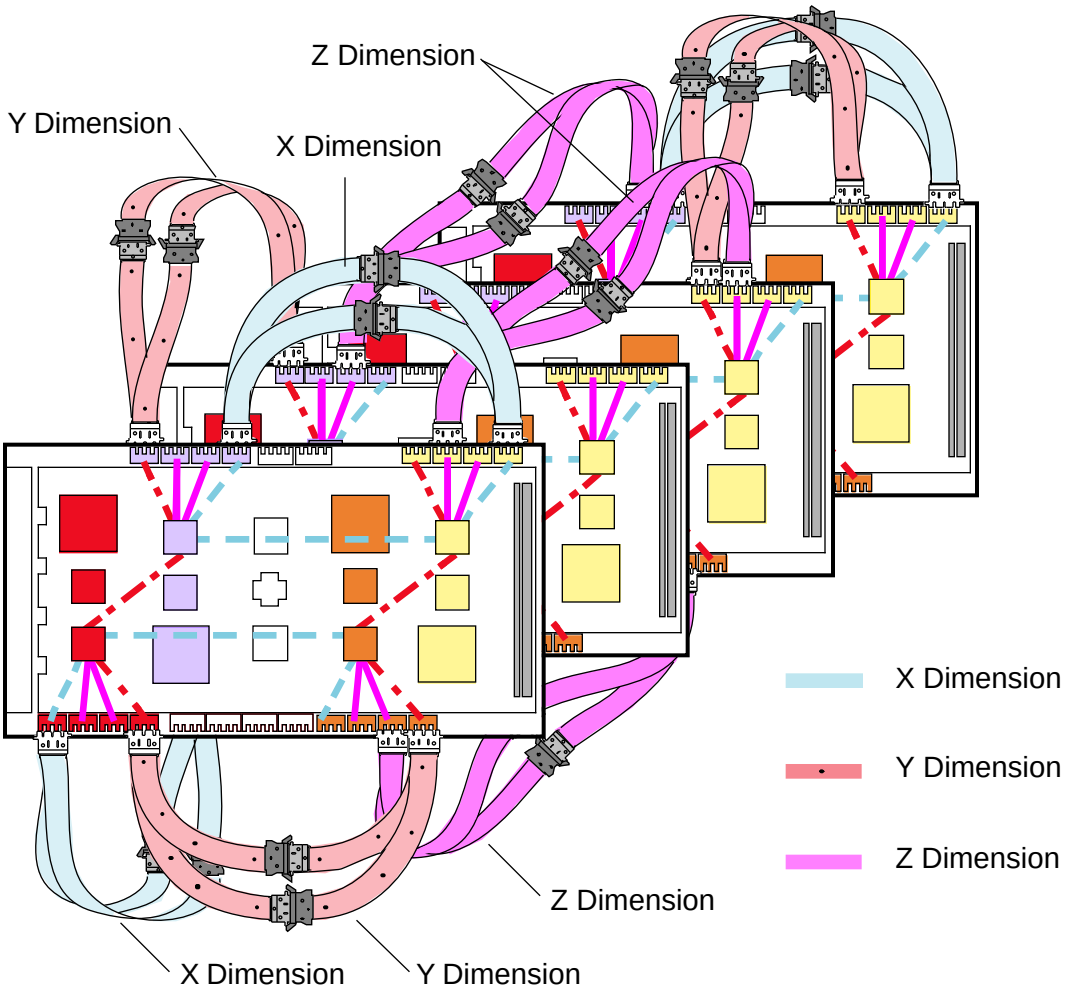

NOTE: For clarity, this figure shows fewer than half of the total torus connections and does not

Two locking levers hold each connector pair together. To disconnect a torus connection: rotate the levers to the side (away from connector bodies) as shown in Figure 67. Then pull the connectors apart. To connect a torus connection: align the alignment pins with the alignment grooves in the connector pair, then push the two connectors together until the locking levers snap into place.

NOTE: It is possible to connect the torus cables upside down despite the alignment grooves. Study the sides of the connectors to determine the subtle differences that will help you identify the pin/groove side in those cases where you cannot see the pins/grooves easily.

Figure 67. Connectors P2 and P3 – Torus Cable Assembly

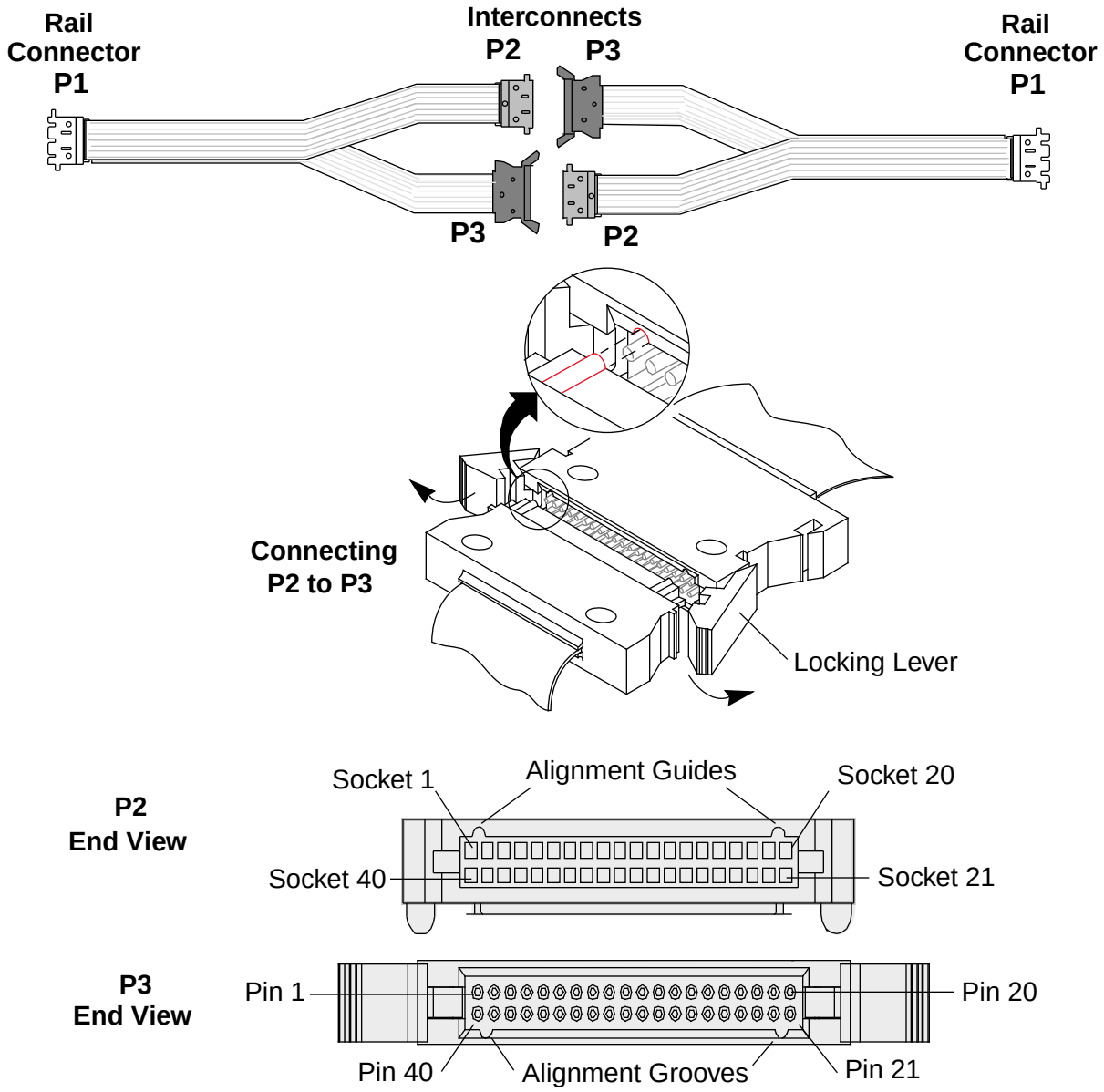

Procedure

1. Label each new torus cable with the cabinet, slot, and connector location.

2. Study the Torus information in the upgrade specification that was shipped with this upgrade. Appendix C contains a sample upgrade specification, and Figure 68 is an example of the Y-side torus section:

Figure 68. Example Upgrade Specification (PE8 to PE12) – Y-side Only

6.1 TORUS

Disconnect

< 0-01-yab	0-02-yab	15112905(x2)	Z dimension
< 0-01-yak	0-02-yak	15112905(x2)	Z dimension

Connect

< 0-01-yab	0-03-yac	15112905(x2)	Z dimension
< 0-01-yak	0-03-yal	15112905(x2)	Z dimension
< 0-02-yab	0-03-yab	15112905(x2)	Z dimension
< 0-02-yak	0-03-yak	15112905(x2)	Z dimension
< 0-03-yaa	0-03-yaj	15112904(x2)	X dimension

Connect the cable from connector yaa in cabinet 0, slot 3 to the cable from connector yaj in cabinet 0, slot 3.

15112904 = Cable part number
(x2) = Two cables

Example Only – The format of your upgrade specification may differ.

3. Take a moment to study the torus layout in the cabinet(s). Try to determine an advantageous method to complete the connections. For example, it may be easier to complete connections that are close to the power supplies before you complete other connections.

   Likewise, it may be easier to complete connections that span a few slots before you complete connections that span several slots.

NOTE: The disconnect/connect sequence presented in this document is for reference only. You may find it easier to make each new connection as soon as you disconnect the old connection.

4. Disconnect the Z-side torus cables as required to complete the upgrade. For each connection, complete the following tasks:

   a. Locate the cables and remove the tie straps.

   b. Double check the upgrade specification to ensure that you disconnect the correct cables.

   c. Disconnect the cables. (Two locking levers hold each connector pair together. To disconnect a torus connection: rotate the levers to the side as shown in Figure 67 on page 107. Then pull the connectors apart.)

   d. Check off the *dis*connection on the upgrade specification.

5. Connect the Z-side torus cables as required to complete the installation. For each connection, complete the following tasks:

   a. Locate the cables (remove tie straps if necessary).

   b. Route the cables from chassis to chassis if necessary (refer to the "TIP" below).

   c. Connect the cables. (Align the pins with the grooves in the connector pair, then push the two connectors together until the locking levers snap into place. Refer again to Figure 67 on page 107.)

   NOTE: It is possible to connect the torus cables upside down despite the alignment grooves. Study the sides of the connectors to determine the subtle differences that will help you identify the pin/groove side in those cases where you cannot see the pins/grooves easily.

   d. Double check the upgrade specification to ensure that you connected the correct cables.

   e. Coil the cables and secure them with a tie strap.

   f. Check-off the connection on the upgrade specification

   TIP: Here is a technique to help you pass the ribbon cables between cabinets. Slide the reference card (the rail connector insert that was included with this document) through the cable trough so that it overlaps the cable trough on both ends. Then, straighten out the ribbon cable that you will pass between cabinets. With one hand on the reference card, place the ribbon cable connector

on the card and slide the cable into the next cabinet. The reference card will serve as a guide plane to help prevent the cable from coiling inside the cable trough.

6. Disconnect the Y-side torus cables as required to complete the upgrade
7. Connect the Y-side torus cables as required to complete the installation.
8. Remove any unused/cut tie straps from the cabinet.
9. Ensure that you have not disturbed any internal connections.

Adding Cabinets – Part 2: After Internal Wiring

Return to the “MAIN TABLE OF CONTENTS”

Contents: Adding Cabinets – Part 2

Close the Cable Ducts, Install the Modules and Side Panel 113
- Close the Cable Ducts 113
- Install the Side Trim 116

Verify the CRAY T3E AC Hardware 118
- Verify the Voltage Selector Switch 119
- Connect the Optional Customer Alarm 120
- Verify the Control System Hardware 123
- Verify Additional Power Hardware 125
- Verify that the Modules Are Seated and Cammed 126

Complete the System Cabling 127
- Cable Labels 128
- Connect the WACS 129
- Connect the GigaRing Cables 130

Connect Input Power to the Cabinets 134

Verify Cabinet Operation 135
- Verify Operation of the Blower 136
- Verify Operation of the Thermistors 136
- Verify Cabinet Power Switch and Shunt Trip Operation 136
- Verify Remote Alarm Operation (Optional) 137

Power Up the Modules 137

Verify Remote Power On/Off 138

Update the Configuration, Run Boundary Scan, and Run Diagnostics 139

Install the Panels and Doors 147

Install the Doors 148
Conclusion (Operating System Changes) 149

Close the Cable Ducts, Install the Modules and Side Panel

Close the Cable Ducts

When you complete the wiring, seal the intercabinet cable troughs by “closing” the duct seals.

1. Carefully close the cable ducts between the chassis to restrict air leaks (and to secure the wires and cables). Secure the retaining screws with a #1 Phillips screwdriver.

2. Use tie straps to secure the wires and cables as needed; trim the tie straps as appropriate.

Figure 69. Intercabinet Cable Ducts

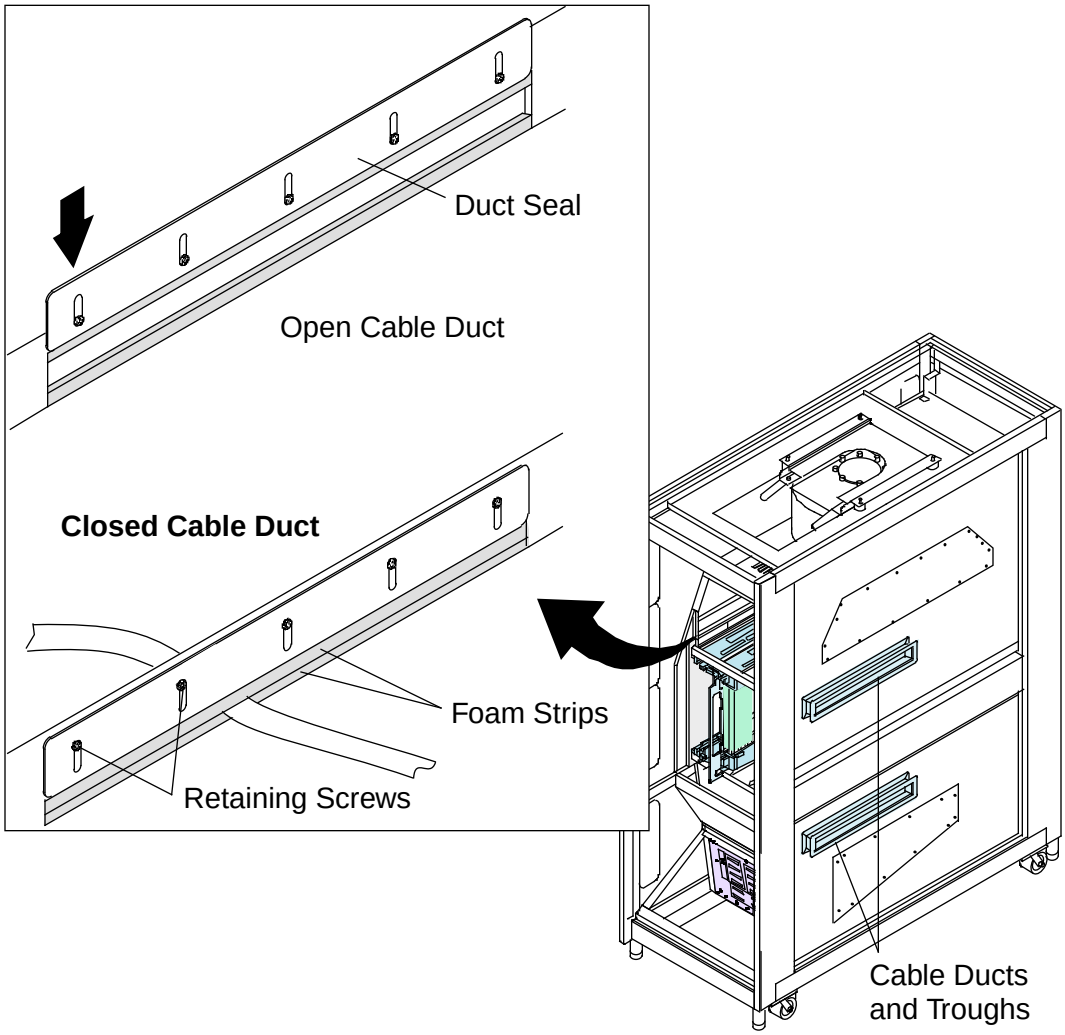

Install the Modules

1. Install any modules that you removed:

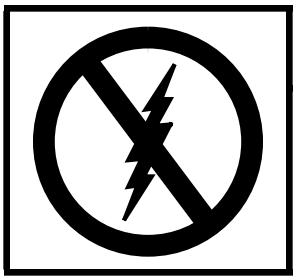

CAUTION

Observe all ESD precautions, and ensure that you do not touch any logic components with your skin, tools, or clothing. Failure to do so could result in damage to the equipment.

NOTE: If the new modules have different memory configurations or clock speeds than the old modules, it may be necessary to reposition the modules.

a. Inspect the module, the module slot, and the connectors.

b. Ensure that the module contains a cam tool (or a plastic cam) in the bottom cam guide. This will prevent the shuttles from slipping down.

c. Position the module with the heat sink to your right, the connector blades toward the ground, and the handle toward your chest.

d. Align the module assembly with the module rails, then insert the module partially into the rails with even pressure.

e. When the module handle is near the upper mechanical interlock, rotate the interlock until the slot aligns with the power supply handle.

f. Insert the handle partially into the upper mechanical interlock, then release the upper interlock and rotate the lower interlock until the slot aligns with the module handle.

g. Fully insert the module, then release the lower interlock. Press firmly to ensure a good connection of module and power supply.

h. Install the setscrew in the bottom of the module handle and tighten it with a 3-mm hex (allen) wrench until the module is secured to the rail.

The setscrew helps ensure that the modules are installed to a uniform depth in the card cage, and it protects the module and module connectors against damage related to movement.

2. Cam (slide) the modules that you installed in Step 1. Refer to Figure 70.

   If you feel resistance, remove the cam, remove the module, and check the rail connectors and pins. Then check the shuttle connectors on the module. Correct any problems, then install the module again. Ensure that it is fully seated, then try to cam it.

3. Insert plastic cams (shuttle connector locks – P/N 12919100) in the modules, if available.

   NOTE: If you do not have enough plastic cams and/or metal cams to insert them in the *top and bottom* shuttle guides of every module, then insert them in the *top* shuttle guides of every module. This will prevent the top shuttles from sliding down.

Figure 70. Module Camming

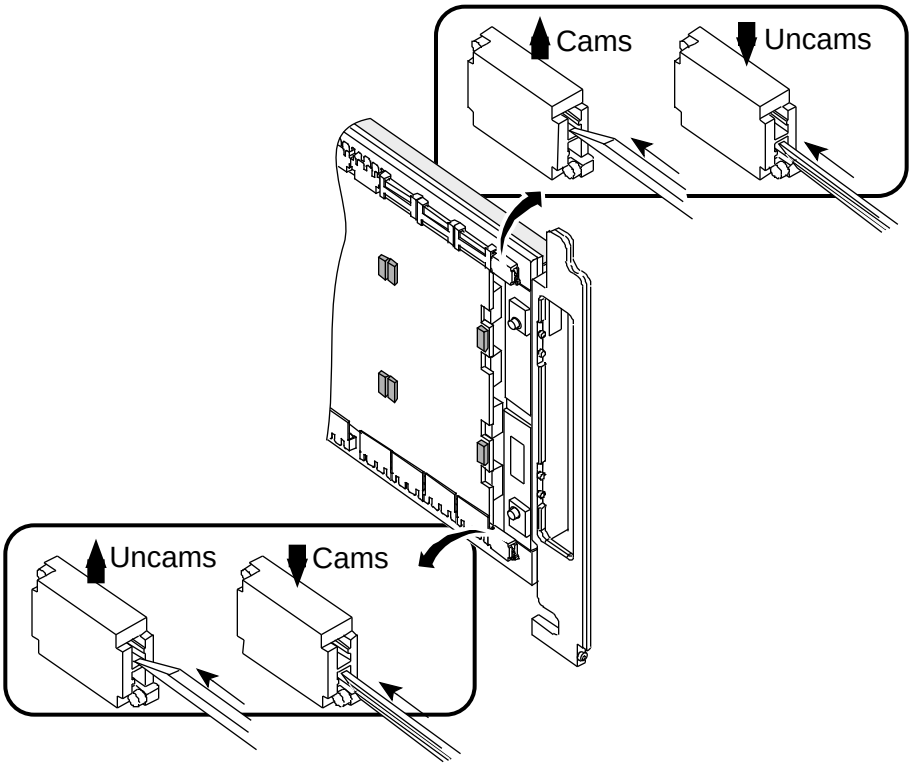

Install the Side Trim

Install side trim using the following procedure:

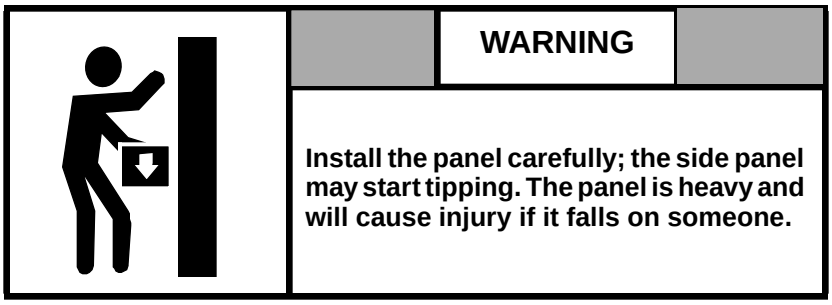

1. Collect the bolts, washers, and 10-mm socket wrench required for side-trim installation, and position them so that you can access them when you need them.

2. With a partner, position the side panel next to the end cabinet. Ensure that it is oriented correctly.

   Position the panel so that the louvered section is at the bottom left side of the panel, toward the power supplies, as shown in Figure 71.

3. With a partner, carefully position the retaining studs in line with the corresponding holes in the frame, then push the studs through the holes until the panel contacts the frame. Refer to Figure 71.

4. While your partner holds the panel in position, replace the washers and nuts on the retaining studs. Secure the nuts with a wrench and the 10-mm socket.

Figure 71. Installing the Side Panel

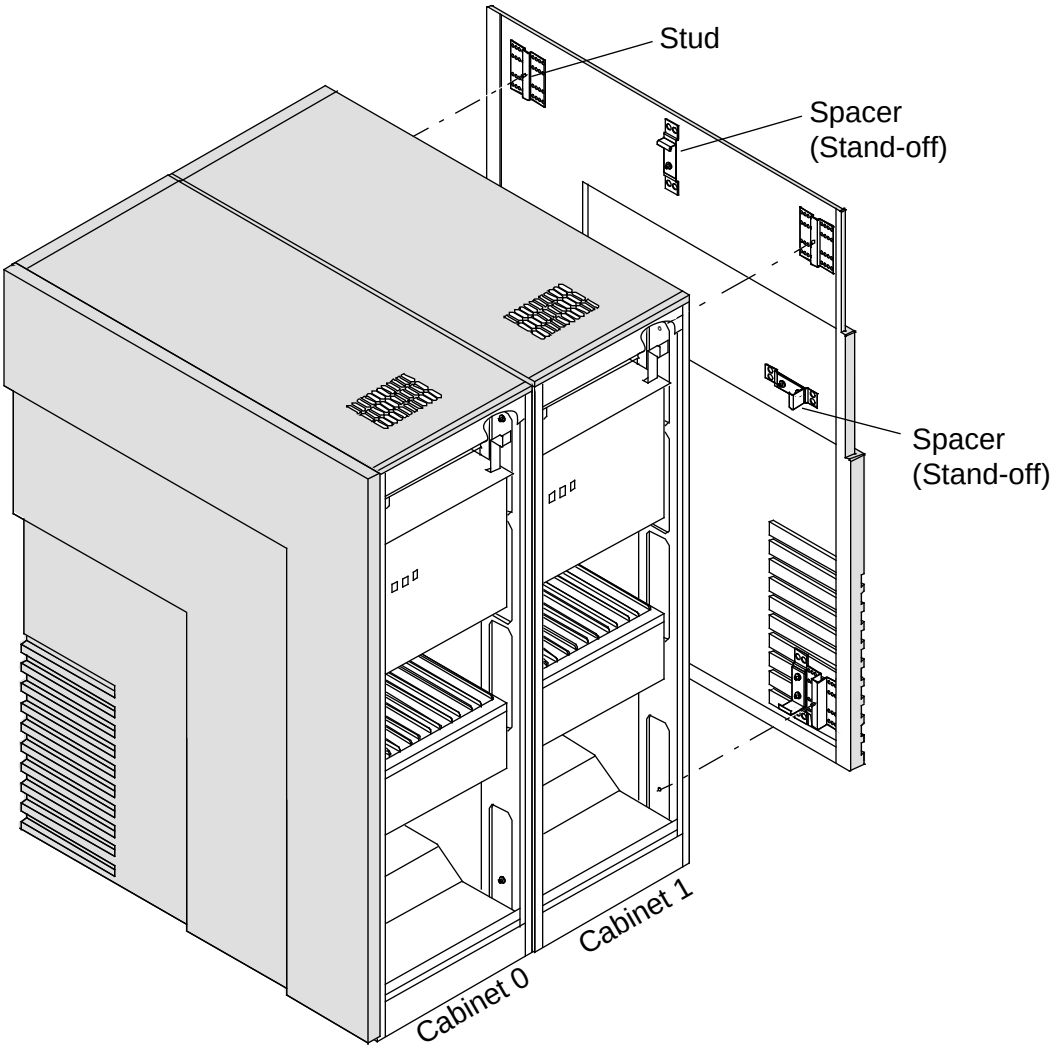

Verify the CRAY T3E AC Hardware

This section contains procedures that you must complete to ensure that the condition of cabinet components is suitable for power-up. **You must complete these procedures for every CRAY T3E AC cabinet that you add.** Refer to Figure 72, which shows several of the cabinet components, as you work.

Figure 72. CRAY T3E Cabinet Components -- Front View

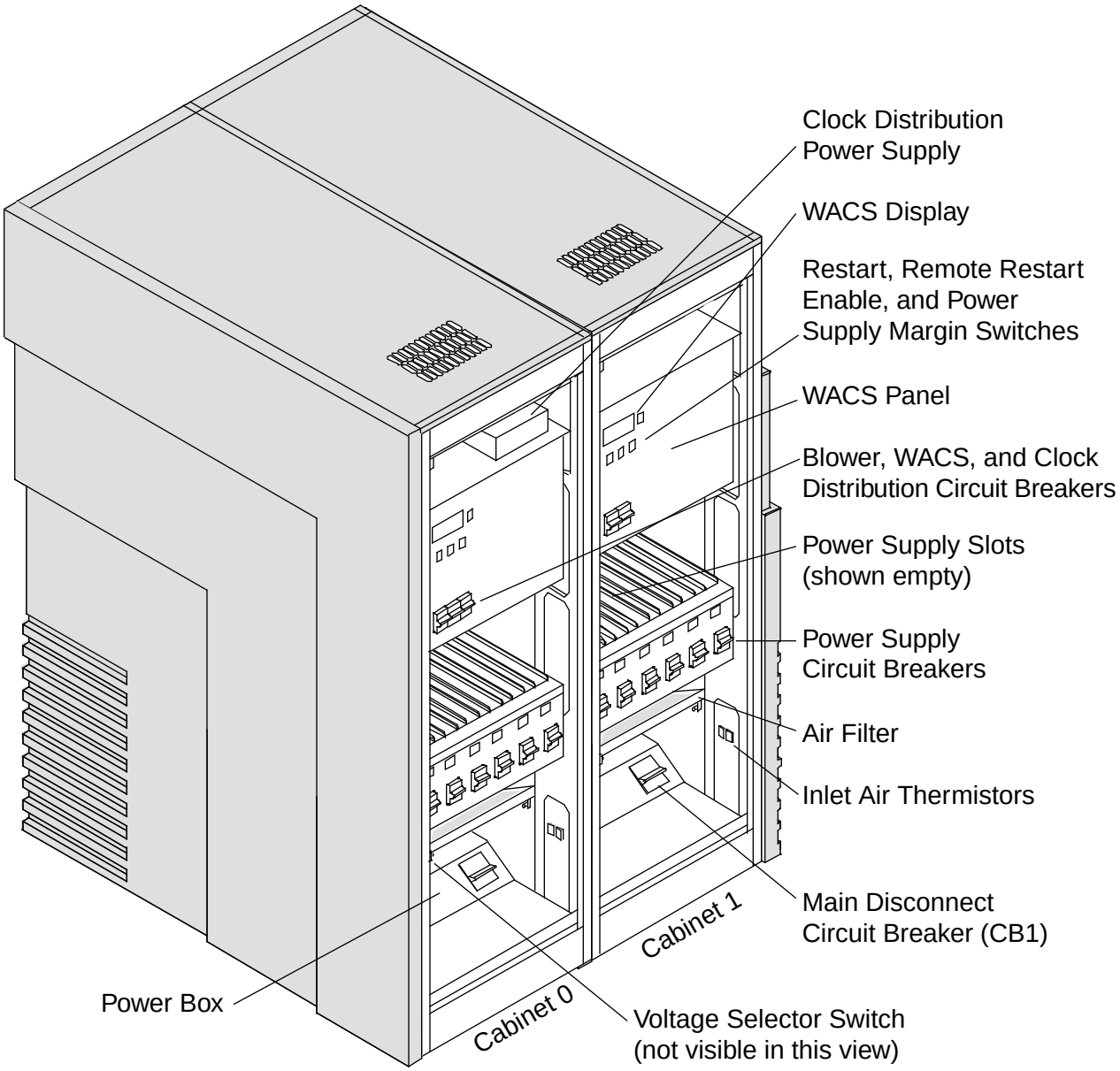

Verify the Voltage Selector Switch

1. Locate the Voltage Selector switch (SW1), which is on the top of the power box at the front of the cabinet.

2. Ensure that the voltage selector switch is set for the proper customer-site voltage. Figure 73 shows the switch (set for 400-Vac operation).

Figure 73. Voltage Selector Switch (SW1)

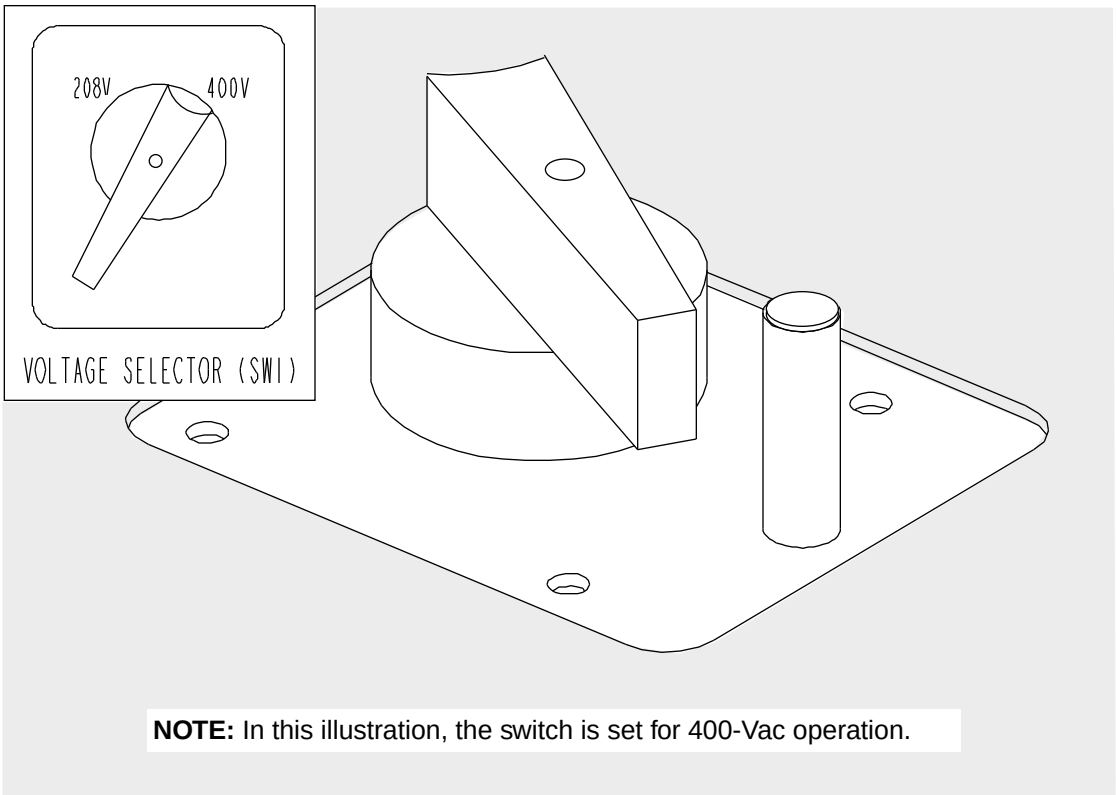

NOTE: In this illustration, the switch is set for 400-Vac operation.

3. If the customer *does not* plan to connect an optional alarm to the CRAY T3E AC cabinet, install the power cord cover now. (The cover is not preinstalled. Instead, it is wedged between the left side of the power box and the side of the cabinet. The screws are in a plastic bag that is taped to the power box cover.) Figure 74 shows the power cord cover.

   If the customer does plan to connect the alarm, complete the following procedure.

Figure 74. Power-cord Cover and Power-box Cover (Removed)

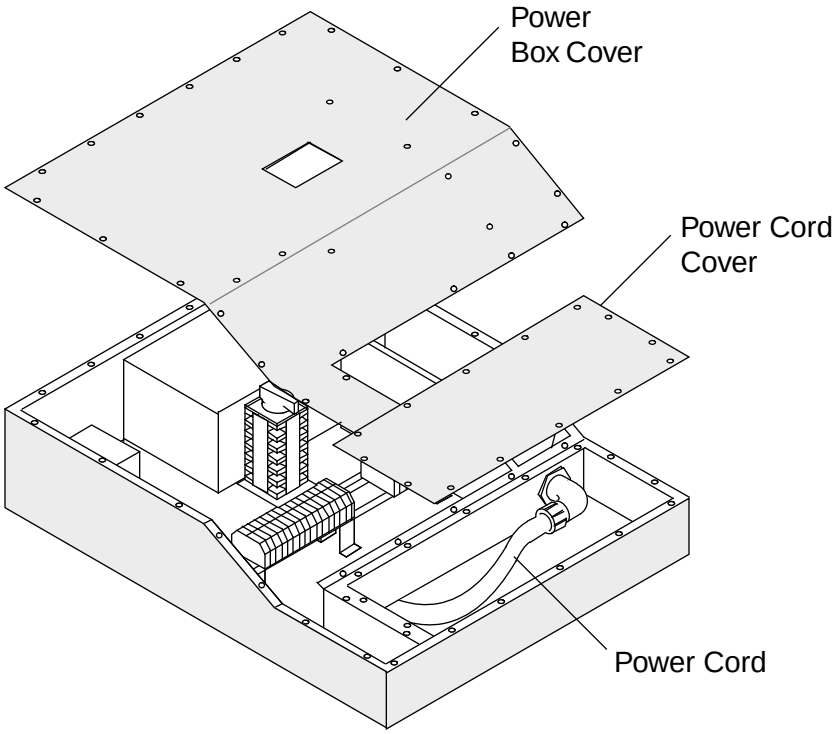

Connect the Optional Customer Alarm

If the CRAY T3E cabinet will connect to the customer's alarm system, use the following procedure to connect it now.

1. Remove the air filter (to provide greater access to the power box and remote alarm contacts):

   a. Use a medium flatblade screwdriver to loosen the retaining screw on the front end of one filter bracket. Refer to Figure 75.

   b. Rotate the filter bracket 90˚ toward the center of the cabinet, as shown in Figure 75.

   c. Repeat Step a and Step b for the other bracket.

      With the brackets in the new position, the filter should drop down approximately 1.5 inches (4 cm).

   d. Ensure that the cabinet door is fully open, then pull the filter out of the cabinet. Set the filter in a clean, protected location.

Figure 75. Filter Bracket

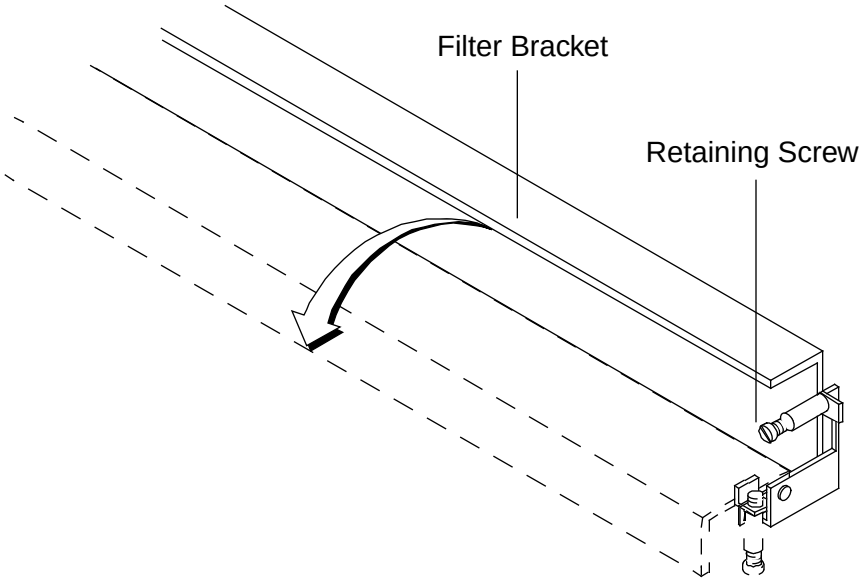

2. Use the following procedure to remove the cover from the power box:

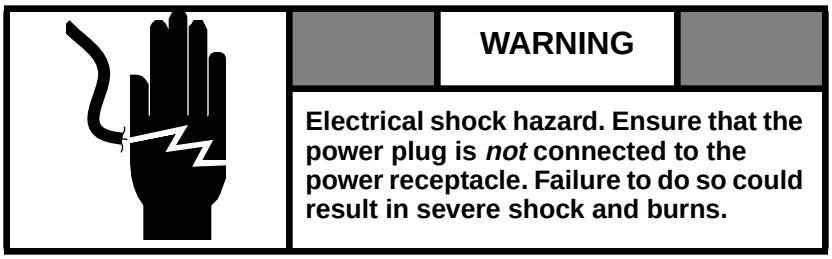

WARNING

Electrical shock hazard. Ensure that the power plug is *not* connected to the power receptacle. Failure to do so could result in severe shock and burns.

   a. Use a #2 Phillips screwdriver to remove the 33 screws that hold the cover in place. Figure 74 shows the power box cover removed.

   b. Pull the cover straight up, then angle it as you remove it from the cabinet. Be careful not to damage the inlet air thermistors or the EMI gasket on the bottom of the cover.

3. Remove the knock-out plug that is near the remote alarm contacts terminal block (TB2).

4. Pass the customer's alarm wires through the knock-out hole. (If a clamp or grommet is provided, use it to secure the wires as they pass through the hole.)

5. Connect the customer's alarm wires to the terminal blocks, using a medium flatblade screwdriver. Figure 76 shows TB2, and Table 7 contains descriptions of the terminal blocks.

Figure 76. Remote Alarm Contacts - Locations

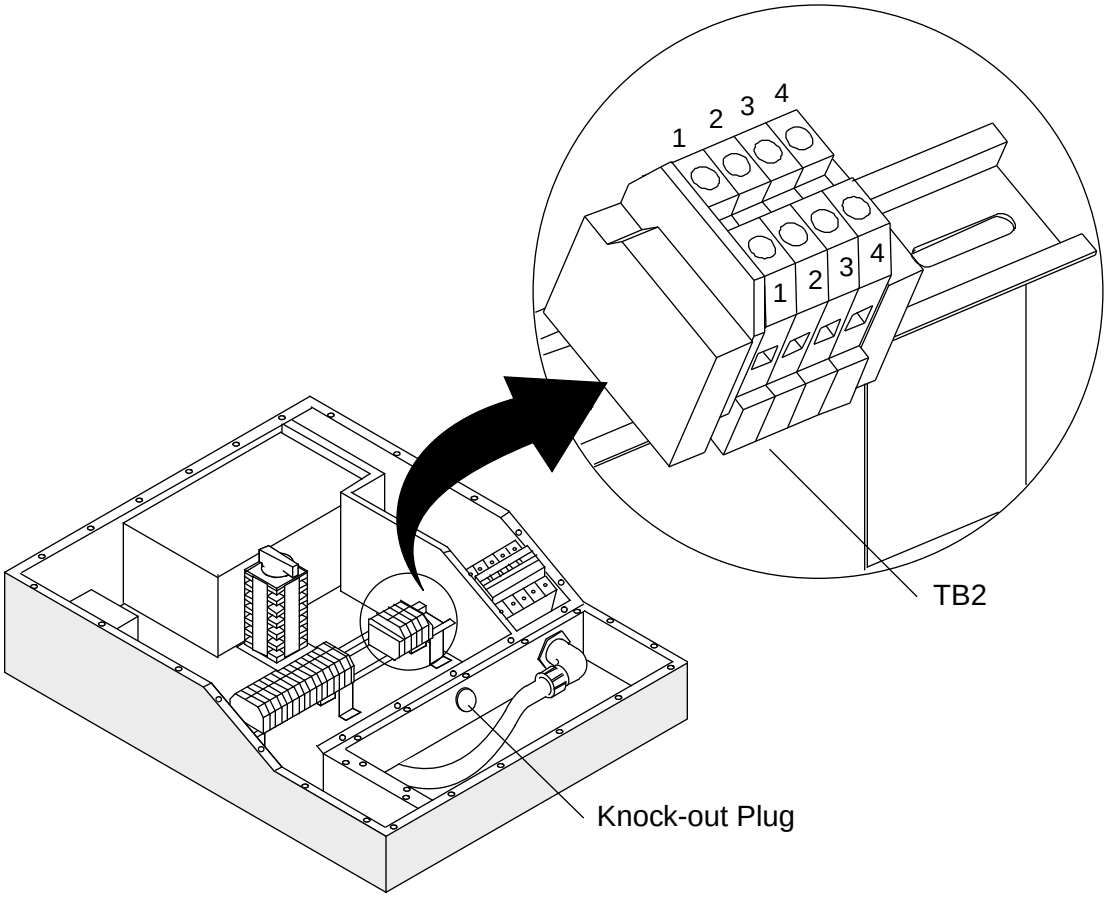

Table 7. Remote Alarm Contacts - Descriptions

Contact	Description
TB2-1	NC (normally closed)
TB2-2	Remote alarm common
TB2-3	NO (normally open)
TB2-4	Shield (ground)

6. Ensure that the opposite ends of the alarm wires are connected to the customer's alarm system.

7. Replace the power box cover and power cord cover. Tighten the screws.

8. Replace the air filter and install it in the operating position. If necessary, use tie straps to prevent the logic and GigaRing cables from touching the filter.

Verify the Control System Hardware

1. Open the warning and control system (WACS) panel, which is shown in Figure 77. Use a medium flatblade screwdriver to turn the 2 panel-latch screws *clockwise*, which loosens them. Then rotate the latches clockwise by hand and open the panel.

Figure 77. WACS Front Panel

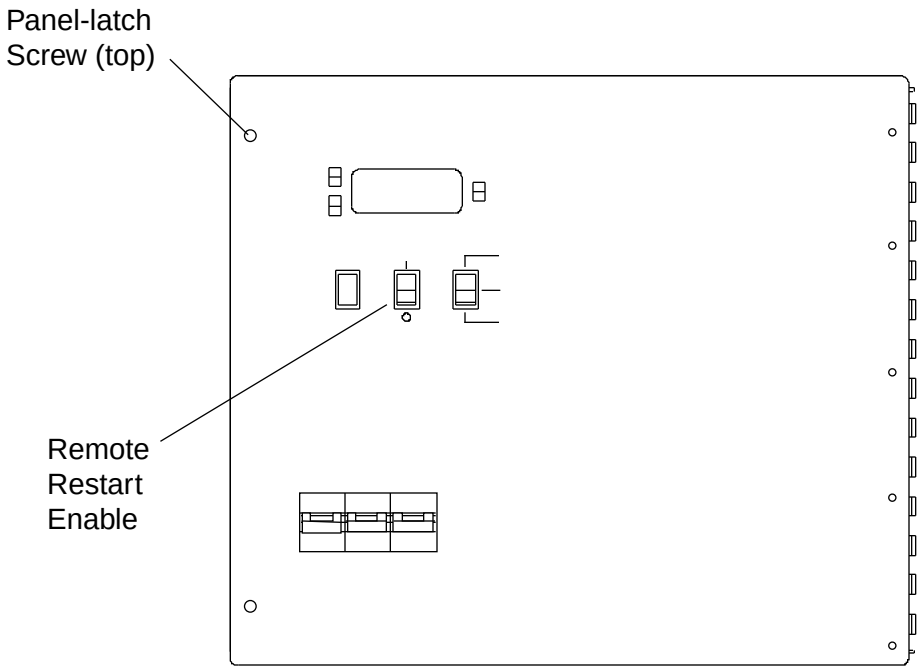

2. Visually inspect the WACS scanner boards for any defects and ensure that the connections are complete.

3. Verify on the *bottom* WACS scanner (labeled *Scanner A* or *Backup Scanner*) that DIP switch position 1 is On (pushed in), and set the other WACS DIP switches as needed for your site.

   DIP switches on scanner A determine the remote alarm functions, the display temperature scale (celsius or Fahrenheit) and whether the WACS displays the auxiliary (clock) voltages. Figure 78 shows the switch locations. Table 8 lists the switch functions.

Figure 78. WACS with Front Panel Open

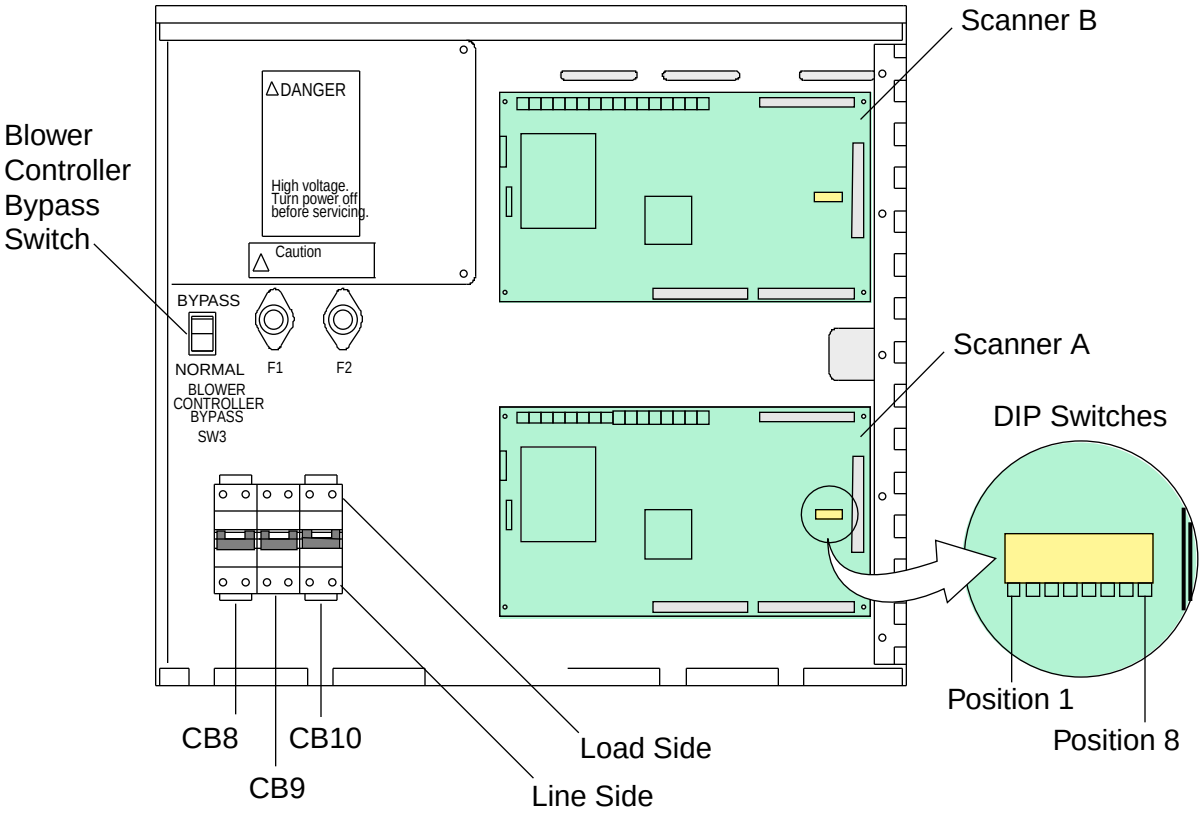

Table 8. Bottom Scanner DIP Switch Functions

Positions	"On" (Pushed In) Function
1	Display auxiliary (clock) voltages
2 through 4	Not used
5	Remote alarm energized (picked) if good – dropped if input power is lost (Determines whether a 1 equals "Good" or "Bad." Normally set to "Off.")
6	Remote alarm enabled on warning and fault (off = alarm on fault only)
7	Remote alarm enabled if cabinet is powered off
8	WACS display temperature scale in Celsius (off = Fahrenheit)

4. Ensure that the Blower Controller Bypass switch is in the Normal (0) position.

5. Close the WACS panel and latch it.

Verify Additional Power Hardware

1. Ensure that all of the power supply cords and power supply control cables are properly seated. Refer to Figure 79.

2. Ensure that the Remote Restart Enable switch is in the disabled (0) position.

3. Ensure that the Cabinet Power switch is in the On (1) position. The Cabinet Power switch (SW2) is on the front cabinet door.

Figure 79. Power Supply Rack

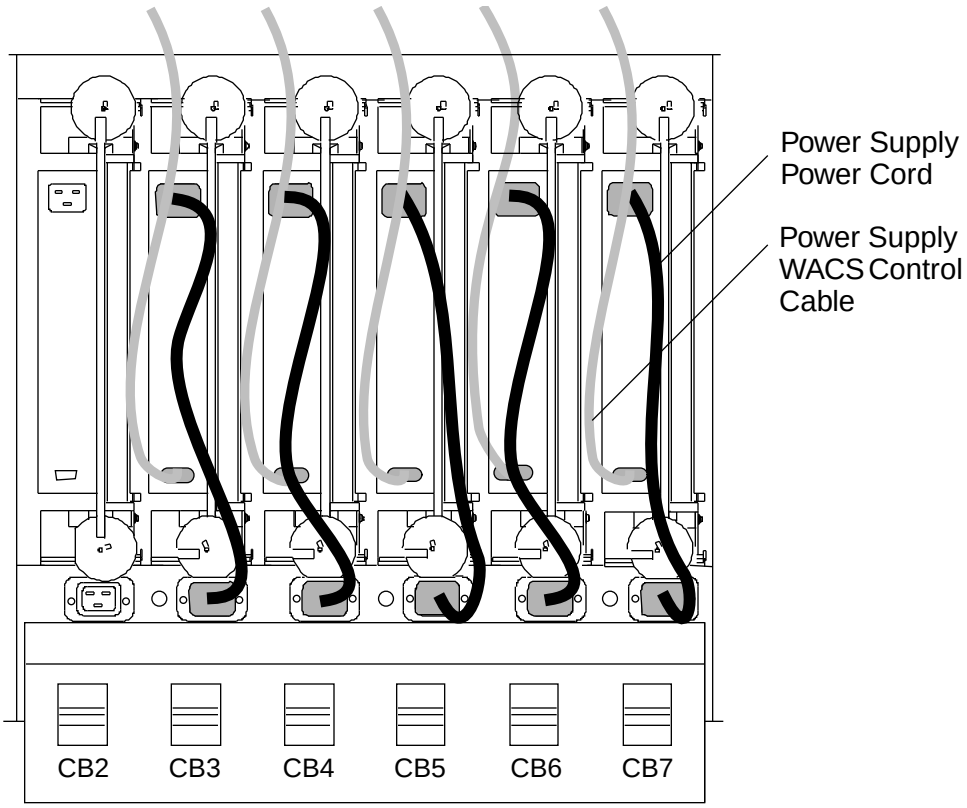

Verify that the Modules Are Seated and Cammed

1. Visually inspect the module area for damage or debris. Ensure that the module setscrews are tight. Refer to Figure 80 for the location of the module setscrews, which require a 3-mm hex (allen) wrench.

Figure 80. Module Setscrew Locations (Rear View of Cabinet)

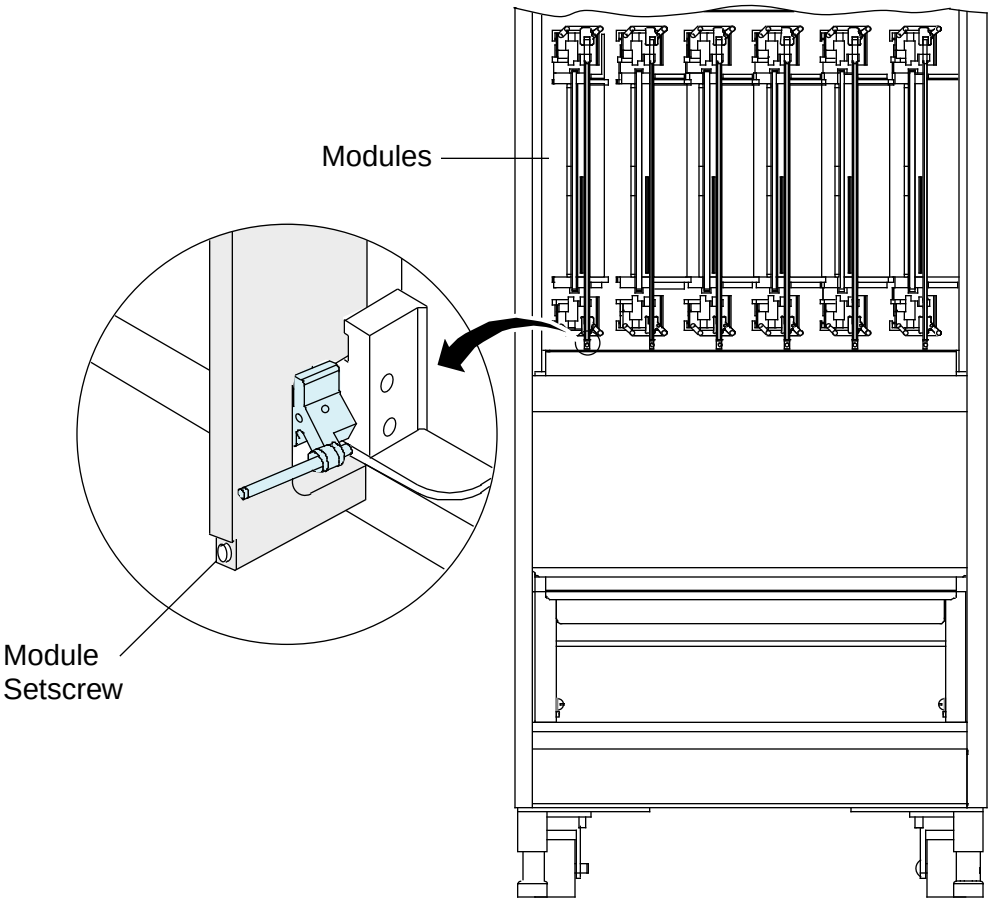

2. Visually inspect the modules to ensure that they are cammed and contain plastic cams. If the modules do not contain plastic cams, recam them to ensure that the connections are good. Refer again to Figure 70 on page 115, if needed.

   NOTE: The plastic cams help keep the shuttles in place during shipment and operation. The plastic cams should be in the *outside* cam slots.

Complete the System Cabling

Before you connect external cables to the CRAY T3E cabinets that you add, become familiar with the new configuration of your system. System cabling is variable, and the cabling plan for your system may require modification of the following cabling procedures.

Figure 81 is a block diagram of a typical CRAY T3E system (the GigaRing channels are simplified).

Figure 81. Typical System - Block Diagram

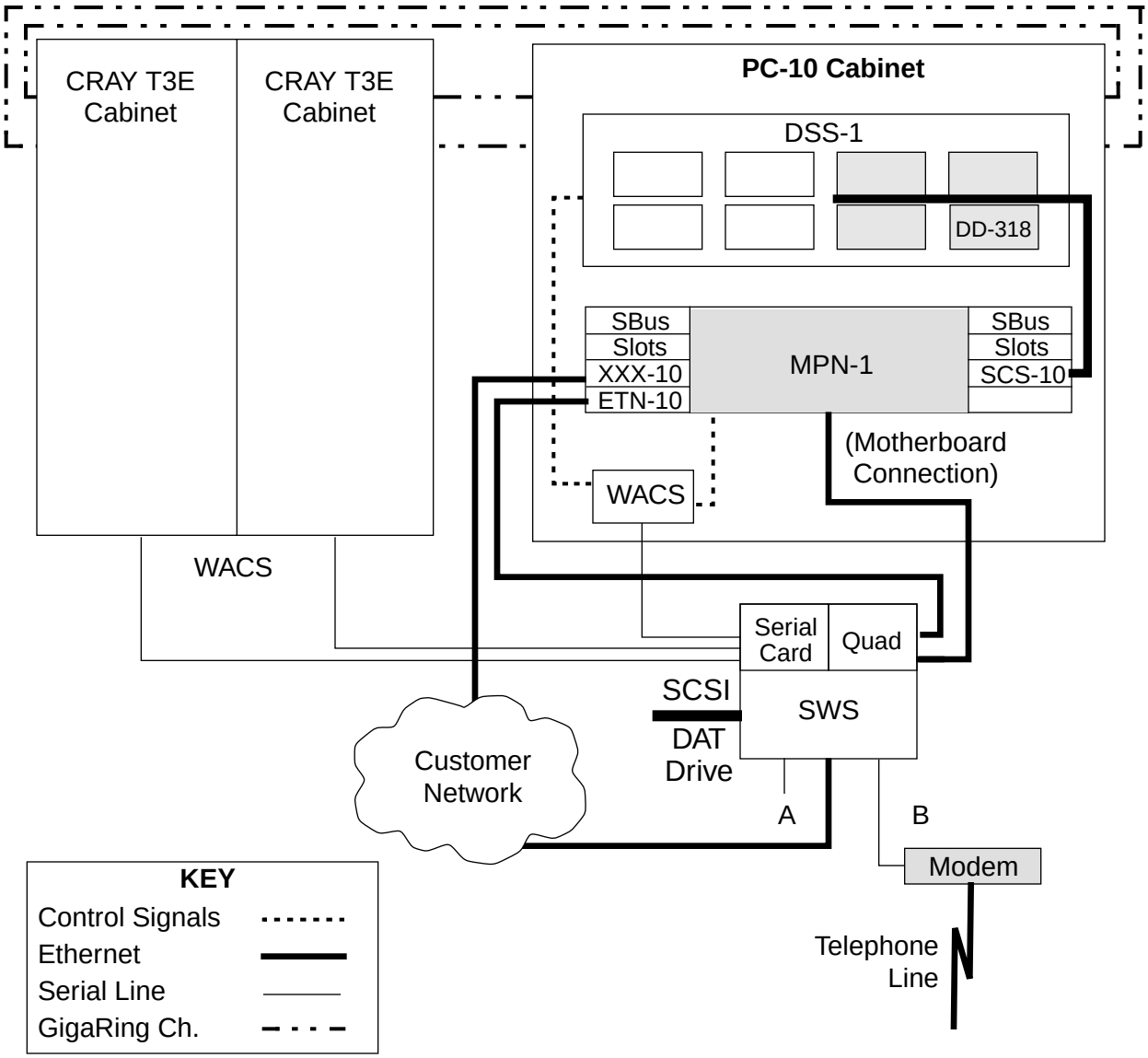

Cable Labels

Cable connections depend upon the customer's system configuration. Ensure that each cable is labeled at both ends with the source and destination connection.

For connections to the PC-10, the cable labels refer to the position of the PC-10 subrack where the cable connects. The position is designated in standard units (SUs). If applicable, the cable labels also refer to the NSR-1 module slot where the cable connects. The position is designated from left to right as N1, N2, N3, or N4.

Refer to Table 9 for a description of PC-10 cable labels and to Table 10 for an example.

Table 9. Cable Labels

Cable Label Line	Description
1	States the mainframe serial number; the peripheral cabinet serial number; or the type of attached device.
2	States the lowest standard unit (SU) that the subrack occupies; states both the lowest SU that the subrack occupies and the node slot; or states the product name of the attached device.
3	States the port name for the cable connection.

Table 10. Example Cable Label

Connection	Source	Destination
SPN to Mainframe	S/N 8008 IPN-1 SU20/N3/GigaRing NEG IN	S/N 6502 T3E SLOT #2/GigaRing NEG OUT

Connect the WACS

Use the following procedure to connect the CRAY T3E AC WACS serial-port cable to each new cabinet:

1. Locate the WACS serial-port cable (P/N 13303300). This is a DB9-to-RJ45 cable. (If you do not locate cable 13303300, then you may have received cable 12166500 and jumper 35549300.)

2. Refer to the system configuration documentation (and to the cable labels, if any) for details on the WACS cabling configuration.

3. Route the serial-port cable between the CRAY T3E cabinet and the SWS (or the ANNEX communication server). The 9-pin connector connects to the CRAY T3E cabinet, and the RJ45 connector connects to the SWS.

4. Connect the serial-port cable's 9-pin connector to the DSub (DB9) WACS connector on the CRAY T3E cabinet. The connector is on the I/O bulkhead on the rear (module side) of the cabinet. Refer to Figure 82. Use a small flatblade screwdriver to secure the connector to the bulkhead.

5. Connect the other end of the serial-port cable to the appropriate connector. (For example, depending on your system configuration, you may connect it to a connector in the MAGMA SBus Serial Port card on the SWS or to a connector in the ANNEX server.) If you connect to an ANNEX server, use adapter 13303400.

Figure 82. WACS Connector Location on I/O Bulkhead

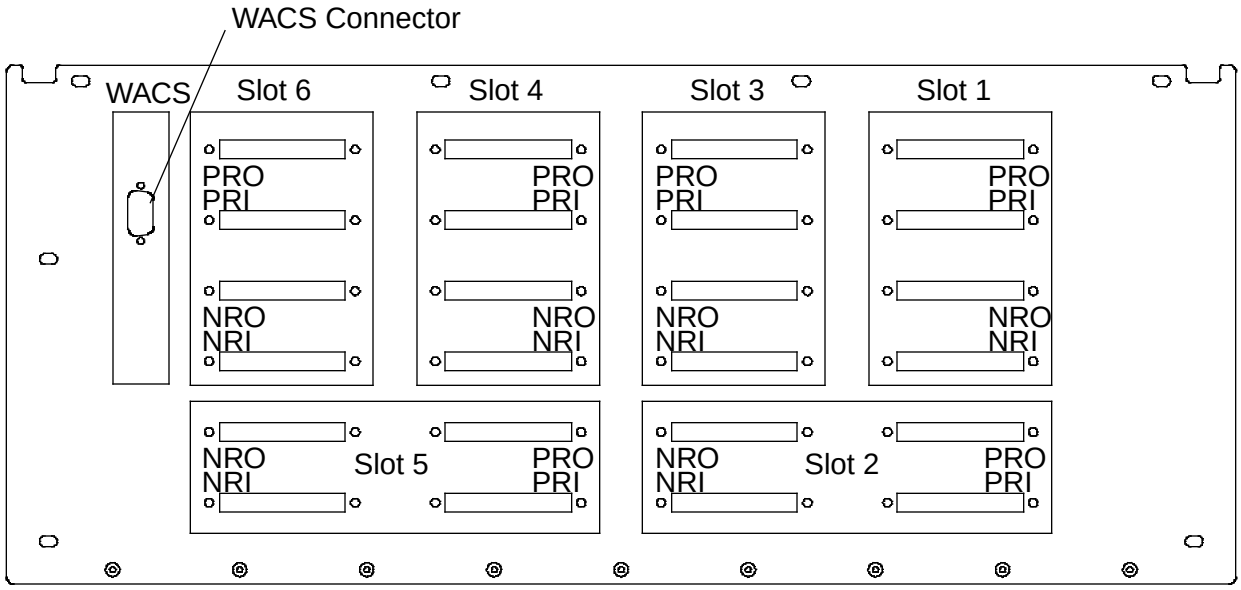

Connect the GigaRing Cables

Background

In the CRAY T3E system, data input and output takes place via GigaRing channels. If connected on a GigaRing channel, a PEM serves as a GigaRing node and connects to an MPN (and to other nodes, if applicable) via four GigaRing connections: two for the positive ring and two for the negative ring. These connections are made through GigaRing cables that connect to the PEMs at the cabinet's I/O bulkhead. Figure 83 shows the cabinet I/O bulkhead.

Figure 83. I/O Bulkhead – Connector Locations

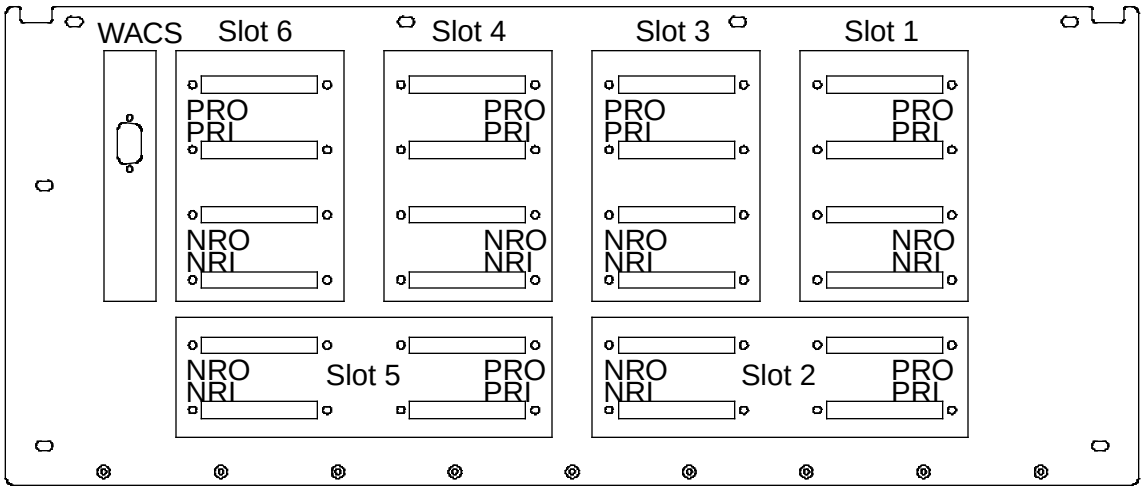

NOTE: In some cabinets, GigaRing connections are made in the wiremat via loopback adapters (P/N 15255500), internal to the I/O bulkhead.

One end of each cable has two screws (male), and the other end has two threaded posts (female). These correspond to jackposts on the I/O bulkhead, as described in Table 11.

Table 11. CRAY T3E AC I/O Bulkhead GigaRing Connections

Description	Jackpost Screw Reference (on bulkhead)
Negative Ring In – NRI	Female
Positive Ring Out – PRO	Male
Negative Ring Out – NRO	Male
Positive Ring In – PRI	Female

Procedure

This procedure requires a 3-mm hex (allen) wrench.

1. If applicable, reconnect the support GigaRing channel. Refer to the cable labels and to system configuration documentation for details on the new GigaRing cabling configuration. Refer to Figure 84 for an example.

   In many configurations, the support GigaRing channel connects to the PEM with the greatest number in the system (such as PEM 9 in a 10-PEM system) and to one or more additional PEMs.

   NOTE: The scan master PEM must connect to one (and only one) MPN. No other nodes (including CRAY T3E nodes) may physically connect to this ring.

2. If applicable, connect customer I/O GigaRing channels to each new cabinet. Refer to the cable labels and to the configuration documentation for the locations.

Figure 84. Example GigaRing Connections

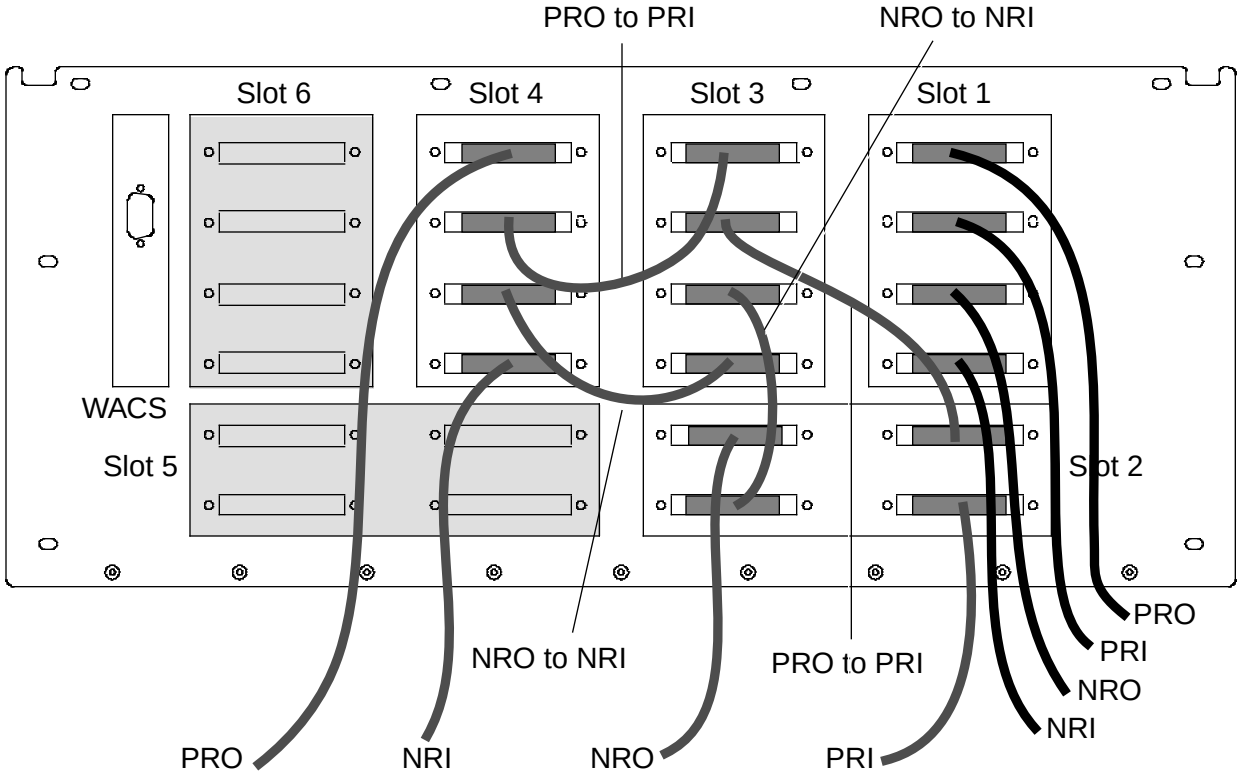

NOTE: In this example, slots 2, 3, and 4 are on a customer I/O GigaRing channel. PEM 0, in slot 1, is the only CRAY T3E node on the boundary scan channel.

3. Ensure that the other ends of the GigaRing cables connect to the MPN, SPN, etc. Figure 85 is a rear view of a PC-10 cabinet and shows GigaRing connections on the MPN-1 and NSR-1 subracks. Figure 86 shows detail of an NSR-1 subrack, and Figure 87 shows detail of an MPN-1.

Figure 85. GigaRing Connectors on PC-10 (Rear View)

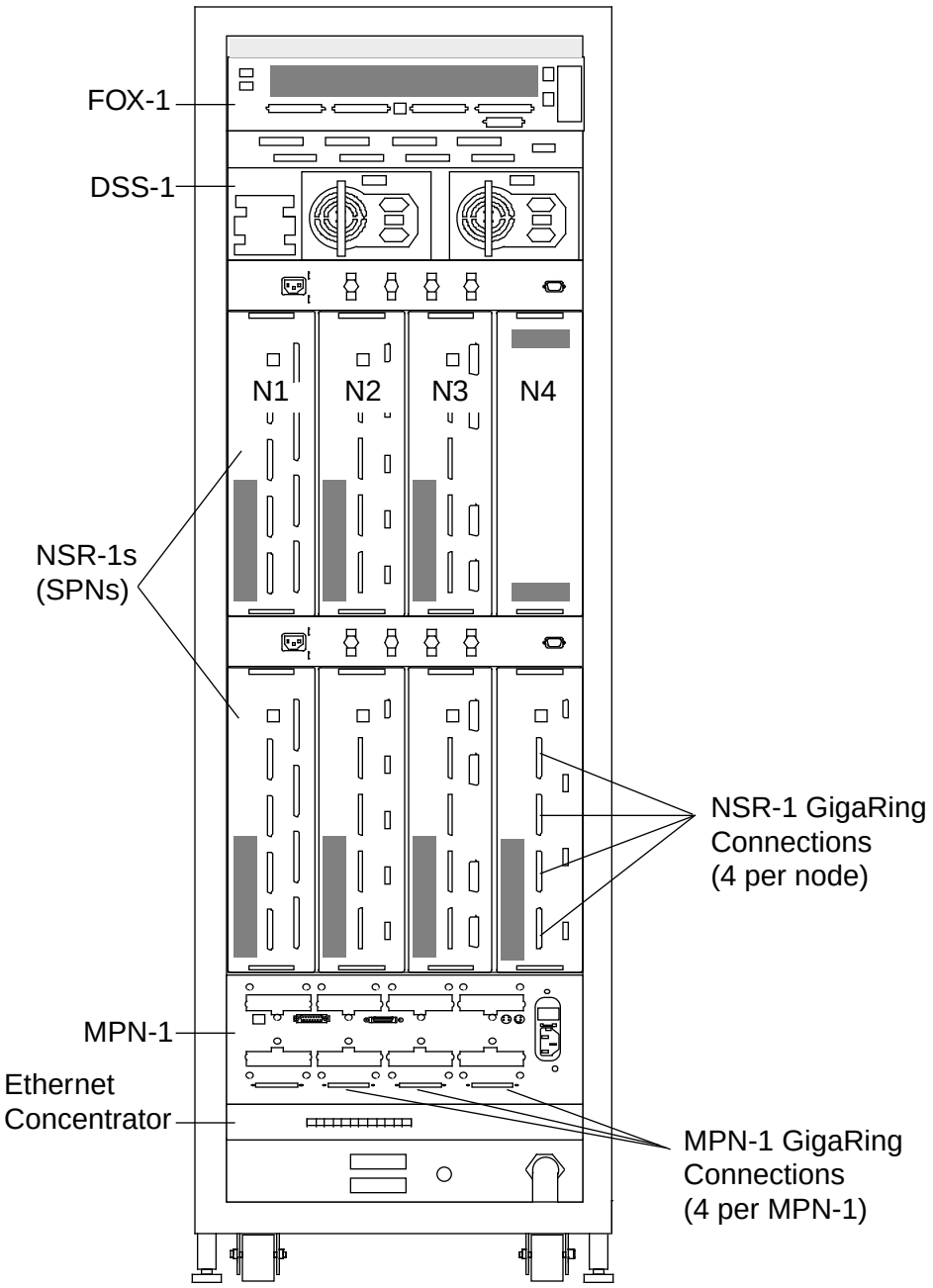

Figure 86. NSR-1 GigaRing Connectors

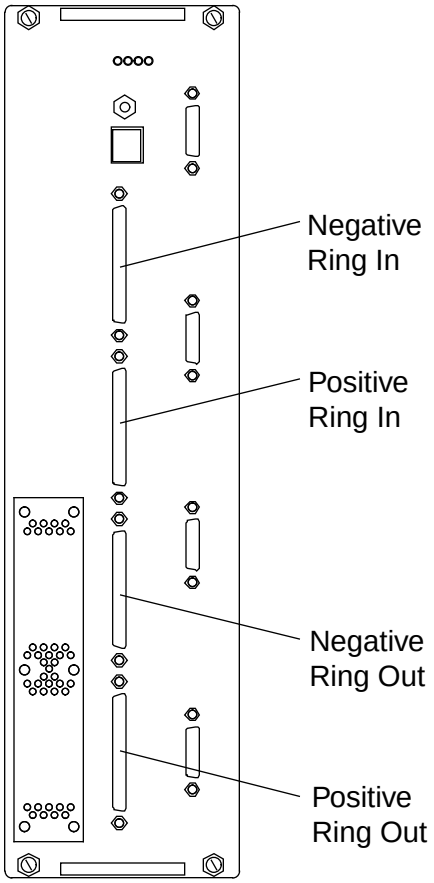

Figure 87. MPN-1 GigaRing Connectors

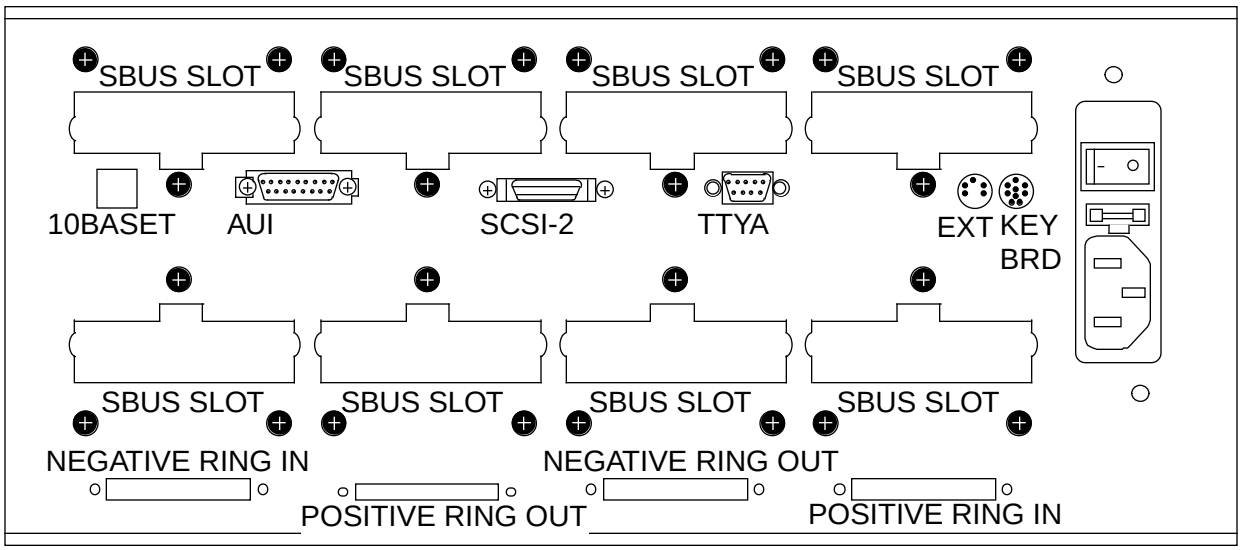

Connect Input Power to the Cabinets

Complete the following procedure for each *new* CRAY T3E cabinet, then power up the *old* CRAY T3E cabinets:

1. Verify that the main-disconnect circuit breaker (CB1), blower circuit breaker (CB8), WACS circuit breaker (CB9), auxiliary circuit breaker (CB10), and power supply circuit breakers (CB2 through CB7) are in the open (0) position.

2. Open (0) the customer breaker that supplies power to the CRAY T3E cabinet.

3. Plug the cabinet power cord into the power receptacle.

4. Close (1) the customer breaker that supplies power to the CRAY T3E cabinet.

5. Close (1) the cabinet's main disconnect circuit breaker (CB1).

Verify Cabinet Operation

Complete the following procedure for each new cabinet to verify correct operation of the cabinet components.

Verify WACS Control

1. Close the WACS circuit breaker (CB9).
2. Set the Remote Restart Enable switch to the enable (1) position. Verify that the switch indicator light is on.
3. Check the WACS display. It should display a summary page. Verify that the bottom line on the summary page reads STANDBY (as shown in Figure 88).
4. Set the Remote Restart Enable switch to the disable (0) position, then press the Restart button and listen for the main contactor to close. Verify that the summary page now reads CAB ON instead of STANDBY.

Figure 88. WACS Summary Screen – Standby Mode

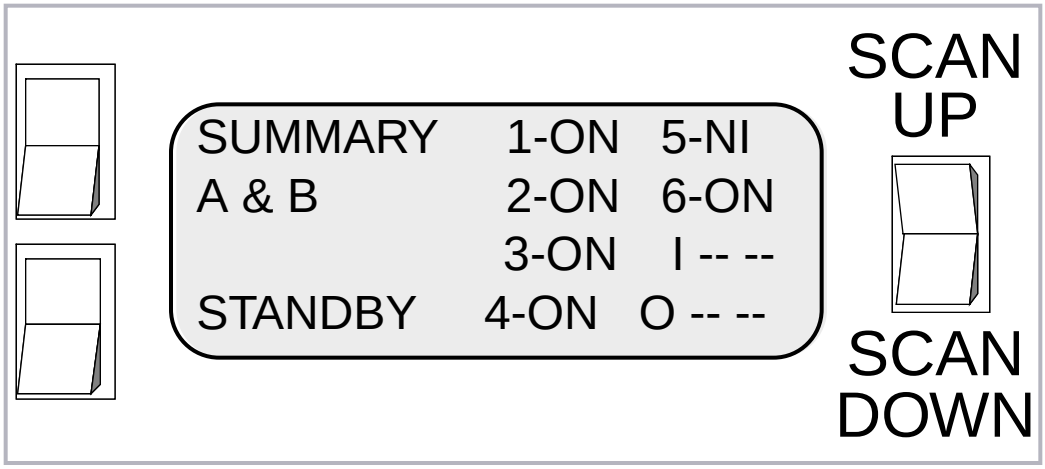

Verify Operation of the Blower

1. Turn on the blower circuit breaker (CB8).

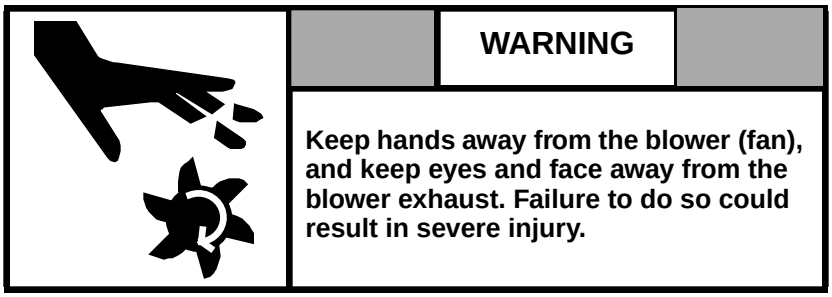

NOTE: If none of the modules are cammed, the WACS will not close the contactor; therefore, the blower will not function.

2. Close (1) the Blower Controller Bypass switch, and verify that the blower operates at full speed.

3. Open the Blower Controller Bypass switch, and verify that the blower speed drops. (The blower normally operates at approximately half speed.)

Verify Operation of the Thermistors

1. At the WACS display, scroll through the screens to verify that the module thermistor readings show temperatures that are equal to the computer room temperature ±5 ^{o}F or ±3 ^{o}C.

2. At the WACS display, verify that the Air In and Air Out readings show a temperature that is equal to the computer room temperature ±5 ^{o}F or ±3 ^{o}C.

Verify Cabinet Power Switch and Shunt Trip Operation

1. At the front cabinet door, toggle the Cabinet Power switch (SW2) to the Off (0) position and verify that the main input circuit breaker (CB1) trips. This verifies that the CB1 shunt/trip is operational.

2. Return the Cabinet Power switch to the On (1) position.

3. Reset CB1.

Verify Remote Alarm Operation (Optional)

1. Apply heat to the inlet air thermistors to create a fault.
2. Listen for the main contactor (CT1) to open and remove power from the blower (and module power supplies).
3. Verify that the customer's remote alarm system detects the fault.
4. Check the cabinet WACS and the nwacs display for the fault information.
5. Push the Restart switch.

Power Up the Modules

1. Turn on (1) the Clock Power Supply circuit breaker (CB10) in cabinet 0 and cabinet 3. CB10, which is on the WACS panel next to the WACS breaker, controls power for the clock distribution power supply.
2. Turn on (1) the clock circuit breakers (CB7) in cabinets 0 and 3.
3. Turn on (1) the power supply circuit breakers. Start with cabinet 0 and work your way to the right.
4. Verify that the green LEDs (located on the end of each power supply) are on. Verify that no amber fault LEDs are illuminated on the power supplies. Refer to Figure 89.
5. At the WACS display, verify power supply output voltages:
   - The voltage on each PEM should be approximately -3.4 Vdc.
   - The main voltage on each clock module should be approx. -3.4 Vdc.
   - The auxiliary voltage on each clock should be approx. -4.45 Vdc.
6. At the Power Supply Margin switch, which is below the WACS display, press the Margin High (top) portion of the switch. Check the WACS display to ensure that the voltage increased by approximately 0.1 Vdc.

   NOTE: On most cabinets, the Power Supply Margin switch does not affect the voltage on the clock module.
7. Press the Margin Low (bottom) portion of the Power Supply Margin switch. Check the WACS display to ensure that the voltage decreased by approximately 0.1 Vdc (below the normal settings).

8. Return the voltage margins to the normal settings.

Figure 89. Power Supply Circuit Breakers and LEDs

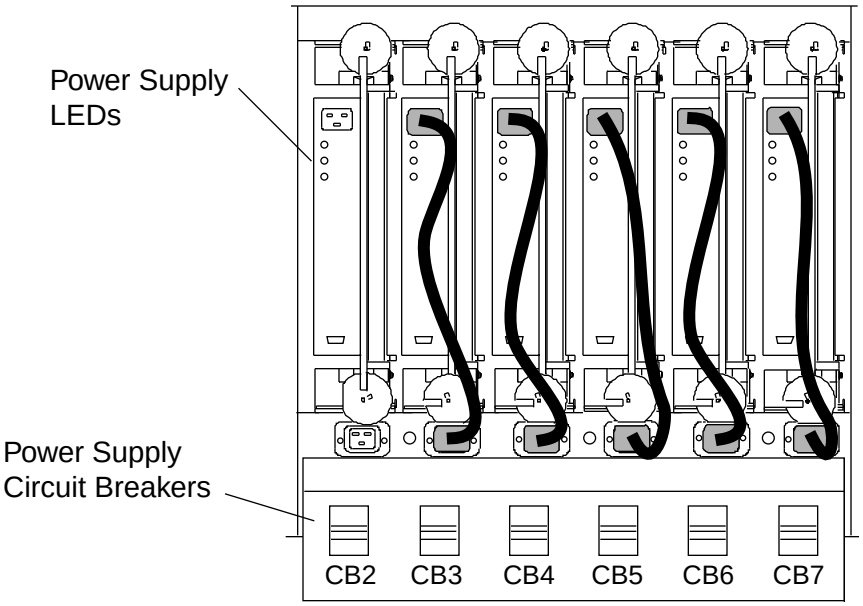

Verify Remote Power On/Off

Before you begin the following procedure, you must bring up nwacs.

1. Close (1) the Remote Restart Enable switch on each new cabinet to enable remote power on/off.

2. At the SWS, use the nwacs Switches window to perform a remote power-off of the cabinets.

3. Check each CRAY T3E AC cabinet to ensure that the main contactor opened and removed power from the blower and the module power supplies.

4. At the SWS, use the nwacs Switches window to perform a remote power-on.

5. Check each CRAY T3E AC cabinet to ensure that the main contactor closed and supplied power to the blower and the module power supplies.

Update the Configuration, Run Boundary Scan, and Run Diagnostics

After you complete the mechanical installation of the new CRAY T3E AC cabinets, update the configuration and run boundary scan and diagnostics.

NOTE: The specific tasks involved are subject to change. Always use the most up-to-date tests and procedures.

1. Ensure that all system connections are complete, including GigaRing, WACS, and Ethernet connections.

2. Ensure that the SWS is powered up.

3. Ensure that the nodes (MPN and SPN) are powered up.

   Firmware that resides in each node initiates power-up self-tests and broadcasts the IP address. The SWS then recognizes the nodes and downloads VxWorks onto the nodes.

4. Ensure that the MPNs and SPNs are checked out with appropriate tests.

5. Ensure that the CRAY T3E cabinets are powered up.

6. Check the following switch settings on the CRAY T3E AC cabinets:

   - Ensure that the margins are set to normal.
   - Ensure that the clocks are set to normal.
   - Ensure that the boundary scan hard enable switches are set to enable.

7. Log in at the SWS as `craydiag`.

   NOTE: You must log in as `craydiag` to change the t3e_config file**.**

8. Run the GigaRing channel-clearing utility for each GigaRing channel that connects to your system. For example:

   ```
   sws# /opt/CYRIsws/bin/ring_clear -l sn6505-mpn0
   ```

   Where `sn6505-mpn0` is the name of the MPN on the ring.

   NOTE: As noted in FN #2242a, use only the released version of the ring_clear command, which is located in /opt/CYRIsws/bin, if SWS-ION release 1.1 or higher is installed. (To determine the release, view /opt/CYRI_version/versions.) The virtual channel (VC) mask is incorrect for some variations of ring_clear commands. The VC mask on the send side is set to use specific paths, which may cause SCX DMA packet time-outs.

9. Bring up nwacs and set the CRAY T3E soft switches for boundary scan operation:

   a. Set the Soft Scan Enable switch (formerly the Testmode switch) to ON.

   b. Set the TCK Select (test clock select soft switch) to TCKS.

   c. Press the Write Switches button.

10. Start T3EMS. Figure 90 shows the T3EMS main window.

Figure 90. T3EMS Main Window

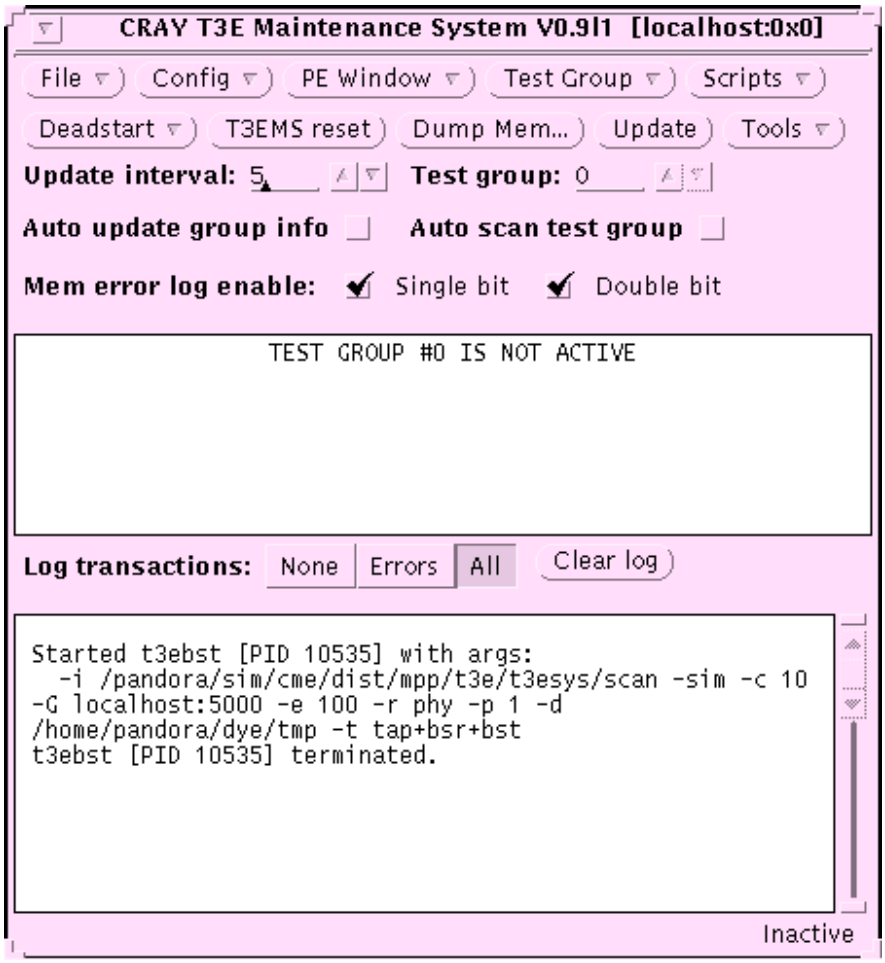

11. Update the number of PEs to reflect the new configuration:

    a. Open the T3EMS System Configuration window via the Config menu in the T3EMS main window.

    b. Update the number of PEs shown in the Nbr PEs: _____ portion of the System Configuration window. Refer to Figure 91. (Do not click Save now; you will save later.)

Figure 91. System Configuration *Window*

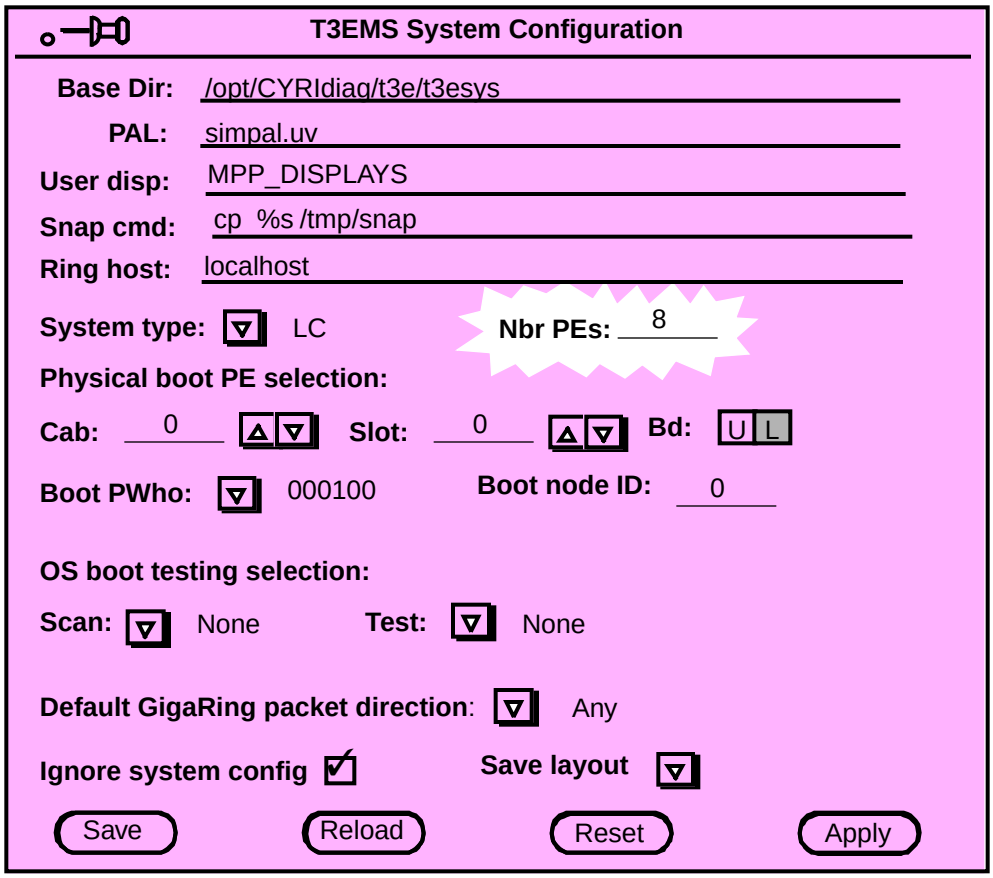

12. Disable the I/O ports on all PEs that do not connect to GigaRing channels:

    a. Open the T3EMS PE Configuration window via the Config menu in the T3EMS main window.

    b. In the bottom half of the PE Configuration window, use your left mouse button to select the PEs where you will disable the I/O ports.

    c. Click on the IO button to disable the I/O ports on the selected PEs. The letters IO appear on the right side of the selected PEs to signify that the I/O ports are disabled (as shown in Figure 92).

13. In the PE Configuration window, ensure that the memory configuration (Mem config) settings are correct for **all PEs**. Make any necessary corrections.

Figure 92. PE Configuration Window

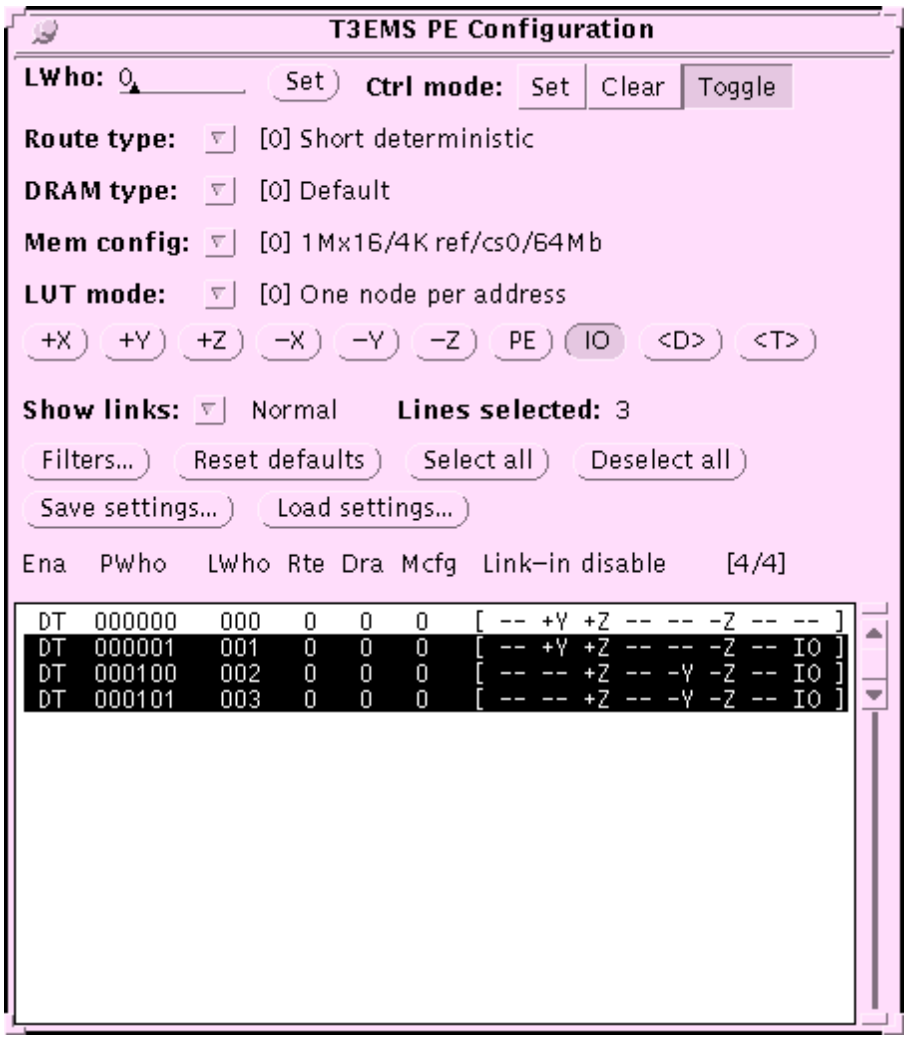

14. Save your changes by clicking on the Save button in the System Configuration window.

15. Run boundary scan:

    a. Under the Tools menu item in the T3EMS main window, select Boundary Scan.

    b. When the T3EMS Scan Tool Options window appears, click on the Start button to run boundary scan. Figure 93 shows the T3EMS Scan Tool Options window.

    NOTE: Boundary scan will generate new vectors for the added PEs.

    NOTE: Run boundary scan at normal voltages as noted in FN #2228.

16. Run Scan clear (t3etap) to reset the clock for normal operation. (Access the Scan clear selection via the Tools menu item in the T3EMS main window.)

17. If necessary, run the GigaRing channel-clearing utility (ring_clear) again.

Figure 93. T3EMS Scan Tool Options Window

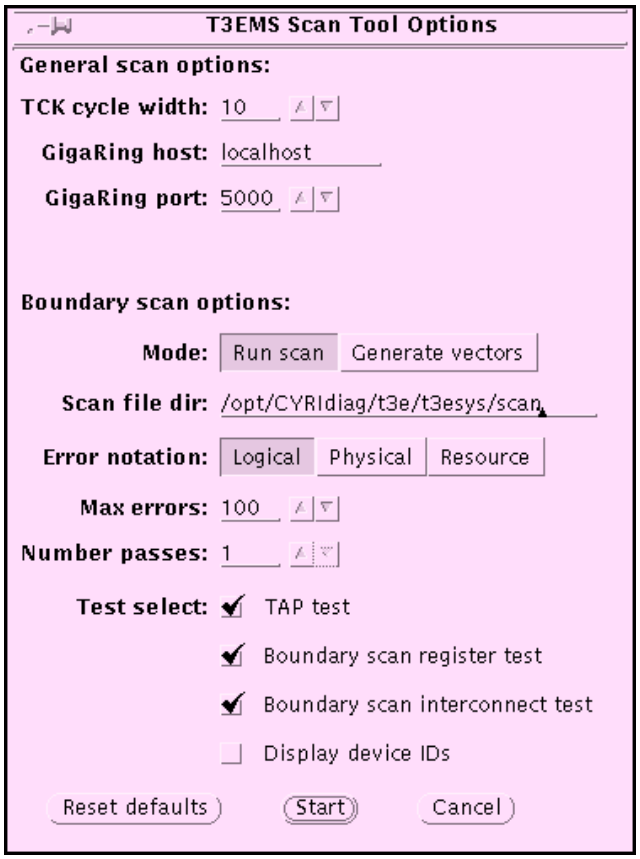

18. Under the Scripts menu item in the T3EMS main window, select Load & Run. The Load Program window appears, as shown in Figure 94.

19. Run the giga_diag.pgm diagnostic. (The giga_diag.pgm diagnostic offers a series of interactive windows that contain program choices. The following list contains a current set of program choices; base your choices on the status of the diagnostic when you run it and on any site-specific needs.)

    a. Select the giga_diag.pgm diagnostic from the Load Program window and click on the Accept button.

    b. When the Section Selects window appears, click on the Done button.

    c. When the SCX Node Select window appears, ensure that the correct target node ID(s) are entered, then click on Done.

    d. When the Target Router Selects window appears, click on Done.

    e. When the Number Of Passes To Run window appears, change the pass count to 1 and click on Done. The diagnostic will then run.

    f. When the diagnostic completes, proceed to the next step.

Figure 94. Load Program Window

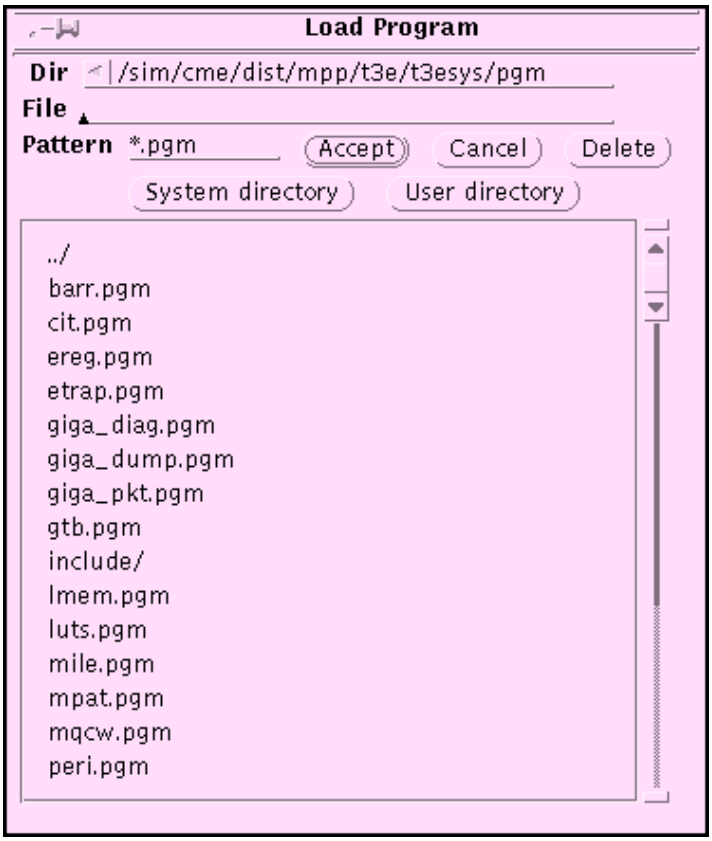

20. Run the mile.pgm command buffer. (This starts the offline diagnostic suite listed in Table 12. This diagnostic offers a series of interactive windows that contain program choices. The following list contains a current set of program choices; base your choices on the version of the diagnostic and on any installation-specific needs.)

    NOTE: The mile.pgm command buffer performs deadstart functions, which clear memory and load PAL (Privileged Architecture Language) code.

    a. Select the mile.pgm command buffer from the Load Program window and click on the Accept button.

    b. The first window provides a choice about which test to begin with. Click on the Done button to start the diagnostic suite with the todt test.

    c. The next window enables you to choose which tests run. Click on Done; you will run all of the tests.

    NOTE: For cit to run under mile.pgm, the rings must be initialized and the IO ports on all PEs – except for the PEs on modules that connect to GigaRing channels – must be disabled.

    d. The next window enables you to choose whether the program will log single-bit errors (SBEs) or stop when it detects an SBE. Select the button that logs SBEs, then click on Done.

    e. The next window enables you to choose whether to dump the SBE information to a file. Select Yes, then click on Done.

    f. The next window enables you to choose whether the suite will run once or continuously. Select Single, then click on Done.

    g. The next window enables you to choose the margins (clock speed and power margin). Select Normal/Normal, then click on Done.

       The diagnostic suite will run now.

    h. When the diagnostics complete, close the window.

Table 12. Offline Diagnostic Tests

Test	Pass Count
The following test runs alone under the *T3EMS scripts:*	
giga_diag	1
The following tests run under the *mile.pgm* command buffer:	
todt (time_of_day_test)	1,000
ereg (E-register local test)	40
barr (barrier/eureka)	50
lmem (local memory test) Preset the config file for correct memory size	1
peri (PE random instruction test)	2,000
rchip (basic router test)	10
xnet (network test)	50
luts (look-up table)	5
mqcw (message test)	3,000
gtb (global translation test)	4
segt (segment translation test)	5
etrap (error trap test)	100
pst (processor stall test)	20
rmem (remote memory test)	1
rlo	2,000
cit	5

Install the Panels and Doors

When you confirm that the system is fully functional and ready for customer operation, replace the access panels and doors that you removed earlier.

Install the Rear Access Panels

Install the rear access panels that you removed earlier. Figure 95 shows the various panels on the rear of the cabinet.

1. Install the upper and lower plenum panels on each cabinet.
2. Install the module panels on each cabinet.
3. Install the blower exhaust shield on each cabinet and connect the clock switch connectors.
4. Install the I/O panels on each cabinet.

Figure 95. Access Panel Locations

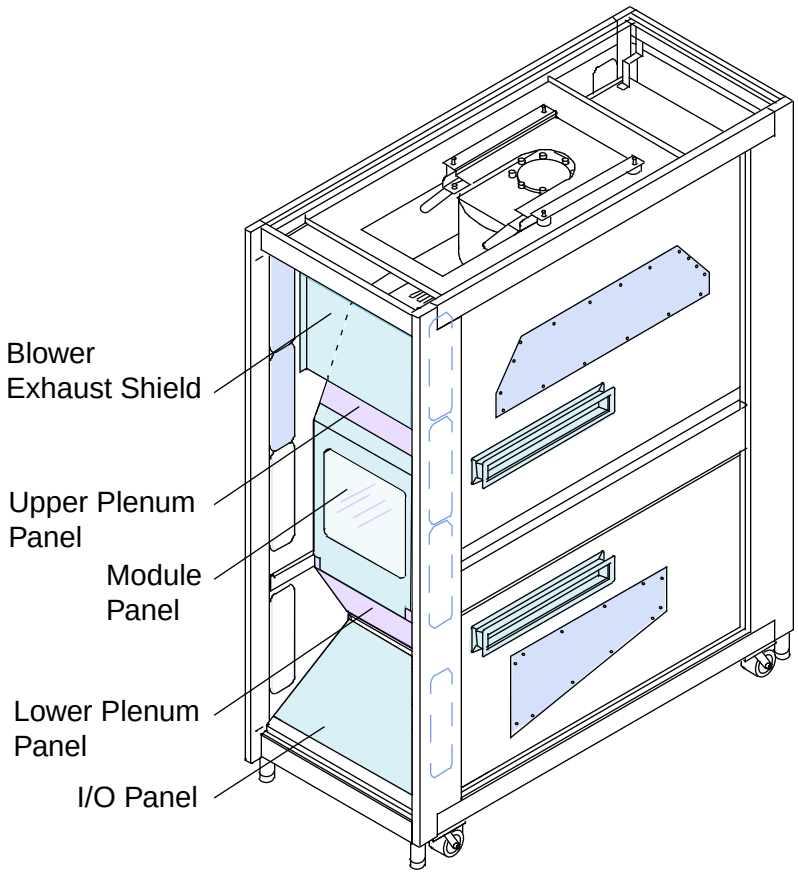

Install the Doors

Replace each cabinet door that you removed earlier using the following procedure. The procedure may require two people.

1. Ensure that all washers are in place on the hinge pins, then carefully position the door's hinge hardware directly above the frame hinge pins.
2. Carefully lower the door onto the frame hinge pins. You may need to flex the door slightly to align the hardware.
3. Ensure that the door opens and closes properly.
4. Connect the ground wire.

Conclusion (Operating System Changes)

This completes the cabinet hardware upgrade procedures for air-cooled systems.

You must now complete the software portions of the upgrade. Refer to the *UNICOS/mk Configuration Reference Manual*, SG-2603, for details.

Adding PEMs

"MAIN TABLE OF CONTENTS"

Contents: Adding PEMs

Overview 153
- Upgrade Materials 154
- Tools Required 155
- Estimated Time to Complete the Mechanical Upgrade 155

Insert Clock Wires in the New PEM Rails 156

Prepare the System for the Upgrade 162
- Remove Power from the CRAY T3E Cabinets 163
- Remove the Rear Door(s) 164
- Remove Access Panels 165
- Open the Cable Ducts 167
- Remove Clock and Logic Modules 169
- Prepare the Top Clock Rail for Wire Insertion 172
  - Remove the Slot Plugs 172
  - Remove Clock Connectors zae – zah 173
- Remove the Slot Covers 176

Install the Rails 177
- Install the Top PEM Rails 179
- Install the Bottom PEM Rails 182

Cable the System 183
- Connect the Clock Wires 184
- Connect the Boundary Scan Wires 190
  - Overview 190
  - Connect the 4-pin Edge-to-Pigtail Cables – P/N 15237701 191
  - Reconnect Cable 15237601 (TDOF[0] < TDOM) 194

Reconnect the Jumper Wire (REPEATI < TDOM) 196
Connect New PEMs to the Daisy Chain (TDOM/TDIM) 198
Reinstall the Connectors in the Top Clock Rail 200
Connect the PEM-to-WACS Cables 202
Rewire the Torus 203
Connect the PEM-to-bulkhead GigaRing Cables 208
Connect the External GigaRing Cables 209
Close the Cable Ducts 209
Install the Modules and Power Supplies 210
Check System Function 213
Check Module Power and Control 213
Update the Configuration, Run Boundary Scan, and Run Diagnostics 214
Install Panels and Doors 222
Install the Doors 223
Conclusion (Operating System Changes) 224

Overview

This section is a guide to the *slot upgrade* of an existing CRAY T3E air-cooled (AC) cabinet. It contains procedures that you must follow when you add processing element modules (PEMs), power supplies, and rails to a cabinet.

A slot upgrade consists of the following primary tasks:

- Preinstalling clock wires in the new rails
- Preparing the cabinet(s)
  - Removing doors and panels
  - Removing modules (for access)
  - Removing connectors from the clock rail (for wiring access)
- Installing new rails
- Cabling the system
  - Completing direct clock connections (2 per new PEM)
  - Completing direct boundary scan connections (2 per new PEM)
  - Completing wiremat boundary scan connections (2 per new PEM)
  - Reinstalling connectors in the clock rail
  - Completing the PEM-to-WACS connection (1 per new PEM)
  - Completing internal GigaRing connections (4 per new PEM)
  - Completing external GigaRing connections
- Installing modules and power supplies
- Checking system function (with boundary scan, diagnostics, etc.)
- Installing doors and panels

For efficiency, perform the procedures in the order in which they are presented.

Upgrade Materials

For each PEM that you add to your existing CRAY T3E system, you will receive the upgrade materials listed in Table 13:

Table 13. Slot Upgrade Materials

Part Number	Qty	Description
To Be Determined	1	T3E Air Cooled Module and Wire Reconfiguration (Engineering disconnect / connect specification)
15104900 (subject to change)	1	Module assembly, air-cooled PEM
15223701	1	Wire assy, clock
15224008	1	Wire assy, 34 AWG
Mechanical Kit, Slot PEM (P/N 57175200), which includes the following:		
57252500	1	Rail, power supply top
57252400	1	Rail, power supply bottom
57255300†	1	Rail assy, PEM top†
57255000	1	Rail assy, PEM bottom
57161700	12	Shoulder screws (for module rails and power supply rails)
57178100	1	Power supply assy, T3E
57170001	1	Cordset, IEC320 20A 480V
57172000	1	Screw, cap sch M4 SST (power supply handle)

† The top PEM rail assembly includes numerous direct connections plus one boundary scan Edge-to-Pigtail cable – 4-position pin (P/N 15237701), which is plugged into the PEM-to-Scan cable (P/N 15214300).

You may also receive cable labels, which you will complete as you perform the upgrade.

When you receive the upgrade materials, take some time to ensure that you received all of the required components. Note that the following parts are most likely to be missing:

- Screwlock, female 4-40 (GigaRing jackpost screw) – P/N 13265000
- Screwlock, male 4-40 (GigaRing jackpost screw) – P/N 13265100
- Mounting hardware for PEM-to-WACS cables
- Screw, shoulder SCH M6 – P/N 57218300
- Wire and cable labels – P/N 15151000, etc.

The various screws may be attached to the cables. Your CRAY T3E cabinet may already contain the hardware for the PEM-to-WACS cables.

Tools Required

The following tools are required to complete the upgrade. These tools are available in the CRAY T3E tool kit (P/N 57247800).

- 3-mm, 4-mm, and 5-mm hex (allen) wrenches with driver
- 0.5-in. hex (allen) wrench with torque driver
- #1 and #2 Phillips screwdrivers
- Small and medium flatblade screwdrivers
- Flashlight
- 0.3-mm mechanical pencil, with no lead (or a wire removal tool)
- Dental pick (or sharp tweezers)
- Hemostats or wire insertion tool (both optional)
- Camming tool (slider)

Estimated Time to Complete the Mechanical Upgrade

Table 14 divides the upgrade process into separate procedures. Use this table to estimate how much system time you should request to complete the upgrade. The times are estimates only; the time required for your upgrade will depend on several things, including your experience and the number of individuals who perform the upgrade.

Table 14. Estimated Time to Complete the Upgrade

Upgrade Task	Estimated Time Required
Preparing the system	2 to 3 hours
Installing the rails	1 to 2 hours per new module
Connecting the clock, boundary scan, and WACS wiring	1 to 2 hours per new module
Rewiring the torus	2 to 6 hours
Reconfiguring the hardware information in T3EMS and testing the hardware	2 hours (under normal circumstances)
OS-related software tasks	Refer to the *UNICOS/mk Configuration Reference Manual*, SG-2603

Insert Clock Wires in the New PEM Rails

Complete the following procedure for each top PEM rail that you receive with the upgrade materials. You will need a dental pick.

Background

Each top PEM rail requires two clock connections:

- A *system clock* connection (P/N 15223701) between PEM connector zah, pin 03, and clock connector zag.
- A *GigaRing clock* connection (P/N 15224008) between PEM connector zah, pin 07, and clock connector zah.

Procedure

1. Locate a top PEM rail (P/N 57255300) and carefully remove it from the packing materials.
2. Locate a system clock wire (P/N 15223701) and a GigaRing clock wire (P/N 15224008). The wires may be may be:
   - Connected to the PEM rail (If connected, skip to Step 3.)
   - In plastic bags that are packed with the PEM rail
   - In plastic bags that are not packed with the PEM rail

   Leave the wires coiled. Add tie wraps if necessary.
3. If the clock wires are not labelled, label them on each end with the slot, connector, and pin location as shown in Figure 96. Your upgrade materials should include blank labels. Refer to the Engineering upgrade specification for the exact connections.

Figure 96. Example – Clock Wire Labels

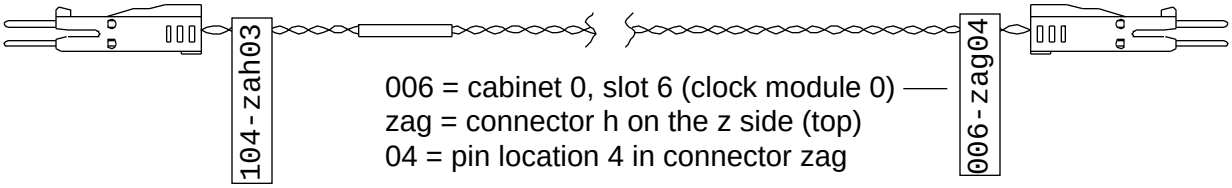

4. Remove the slot plug that seals connector slots zah and zai in the top PEM rail. Refer to Figure 97.

Figure 97. Removing the Slot Plug

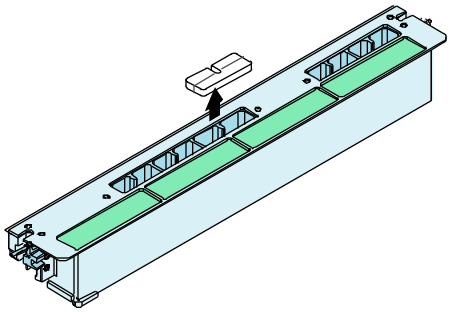

5. Remove the connector pin lock (P/N 01775900) from connector zah:

   a. Carefully position the rail so that you can see into the module-end of the connectors. Ensure that you do not damage any wires or cables when you position the rail.

   b. Pry the pin lock loose from the connector with a dental pick. At various locations around the pin lock, place the tip of the dental pick between the edge of the pin lock and the connector and pry, as shown in Figure 98. **Be careful not to damage any pins.** (You will replace the pin lock with a new one.)

Figure 98. Removing a Connector Pin Lock

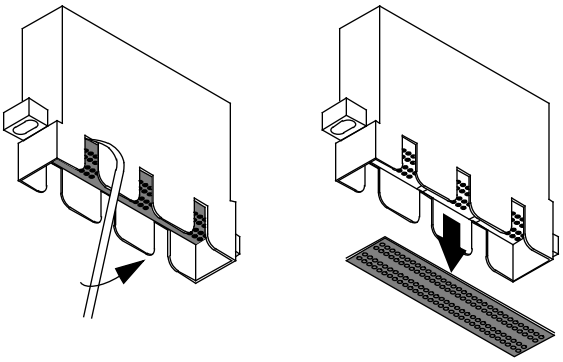

6. Insert the system clock wire in connector zah, pin location 03:

   a. Carefully position the rail so that you can see into the wire-insertion-end of the connectors. Ensure that you do not to damage any wires or cables when you reposition the rail.

   b. Locate connector zah, pin location 03. Refer to Figure 99.

c. Use your fingers (or an appropriate tool such as hemostats) to gently push the 2-pin connector into the pin slot. Then carefully press the top of the 2-pin connector to fully insert it. Figure 101 and Figure 102 show two techniques for inserting 2-pin connectors.

CAUTION
Ensure that you do not damage the fragile clock wires when you insert them in the connector.

NOTE: Position the *curved* edge of each 2-pin connector toward the *outside* wall of the connector block as shown in Figure 101.

7. Insert the GigaRing clock wire in connector zah, pin location 07. Use the same technique that you used to insert the system clock wire.

8. Double-check the locations of the connections and ensure that the wires are not damaged. If you connect a 2-pin connector to the wrong rail location, refer to Appendix A for a *removal procedure.*

Figure 99. Clock Connections to PEM Rail

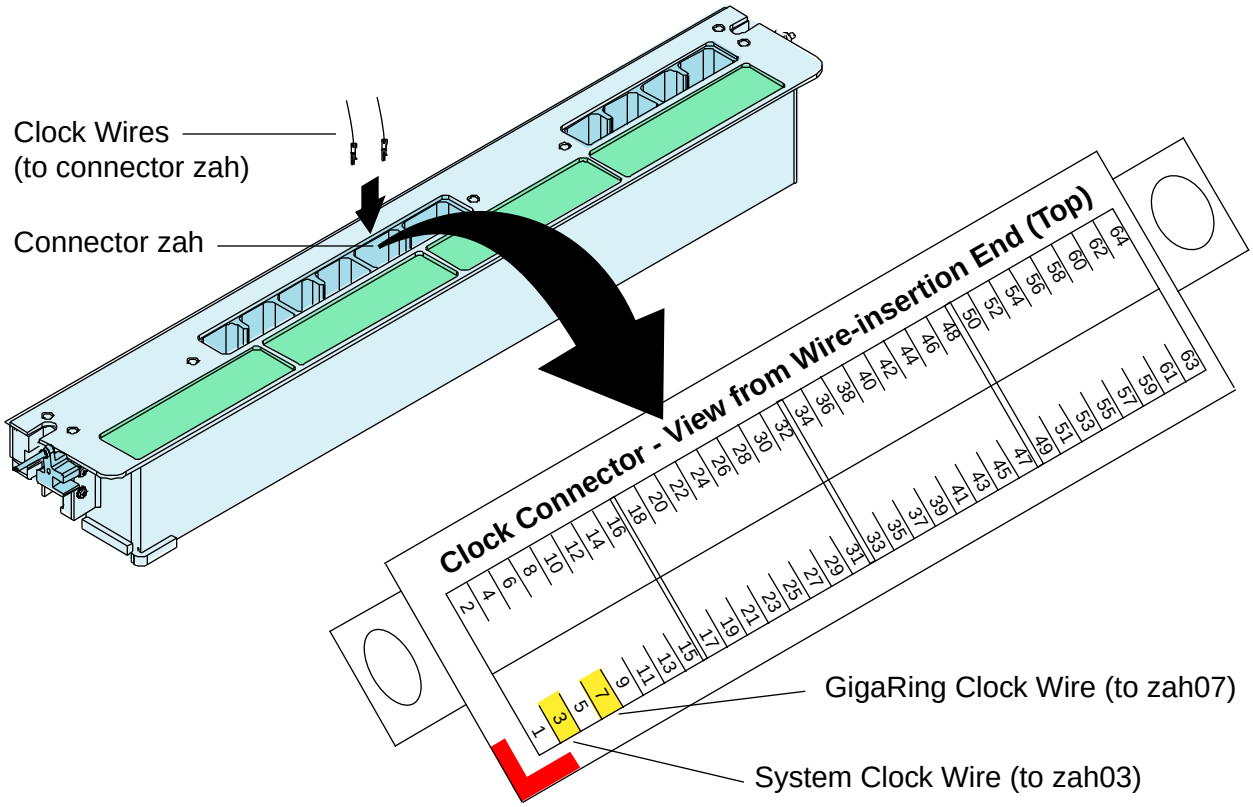

9. Replace the slot plug that seals connector slots zah and zai.

10. Ensure that the wires are coiled and secured to the rail so that you can easily pass the wires through the slot cutout in the top of the card cage when you install the rail.

11. Insert a plastic connector pin lock (P/N 01775900) in connector block zah (and zai if needed) and ensure that the pins are straight:

    a. Carefully position the rail so that you can see into the module-end of the connectors. Ensure that you do not to damage any wires or cables when you reposition the rail.

    b. Position the pin lock on the connector. Place the rough side toward the pins and the smooth side toward the module.

    c. Use a dental tool to fully insert the pin lock in the connector. Press the curve of the dental tool against the center of the pin lock, between the 2 sets of pins. Then gently slide the dental tool back and forth as you push the pin lock into position. Refer to Figure 100.

    d. Ensure that the pins are straight. (If necessary, use a 0.3-mm mechanical pencil to straighten a misaligned pin. Slip the tip of the pencil over the pin and gently bend the pin into the proper position.)

Figure 100. Inserting and Seating a Plastic Connector Pin Lock

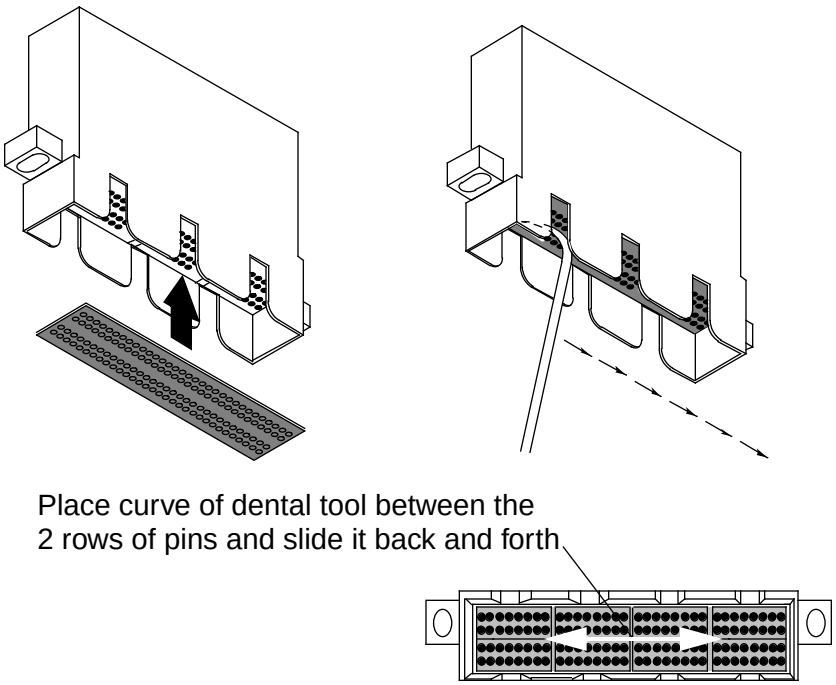

Figure 101. Wire Insertion

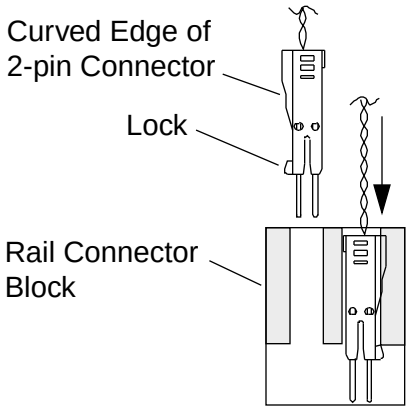

Move the clock wire's 2-pin connector to the appropriate location. Position the curved edge of the 2-pin connector toward the outside of the rail connector block

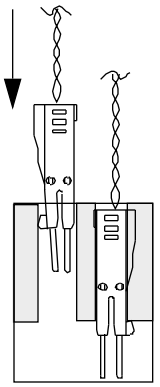

Gently push the 2-pin connector into the rail connector.

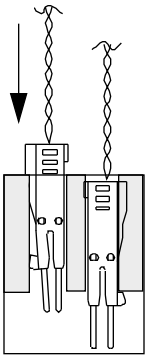

Press the top of the 2-pin connector with your fingertip to fully seat it in the rail connector.

Figure 102. Wire Insertion with Wire Rod

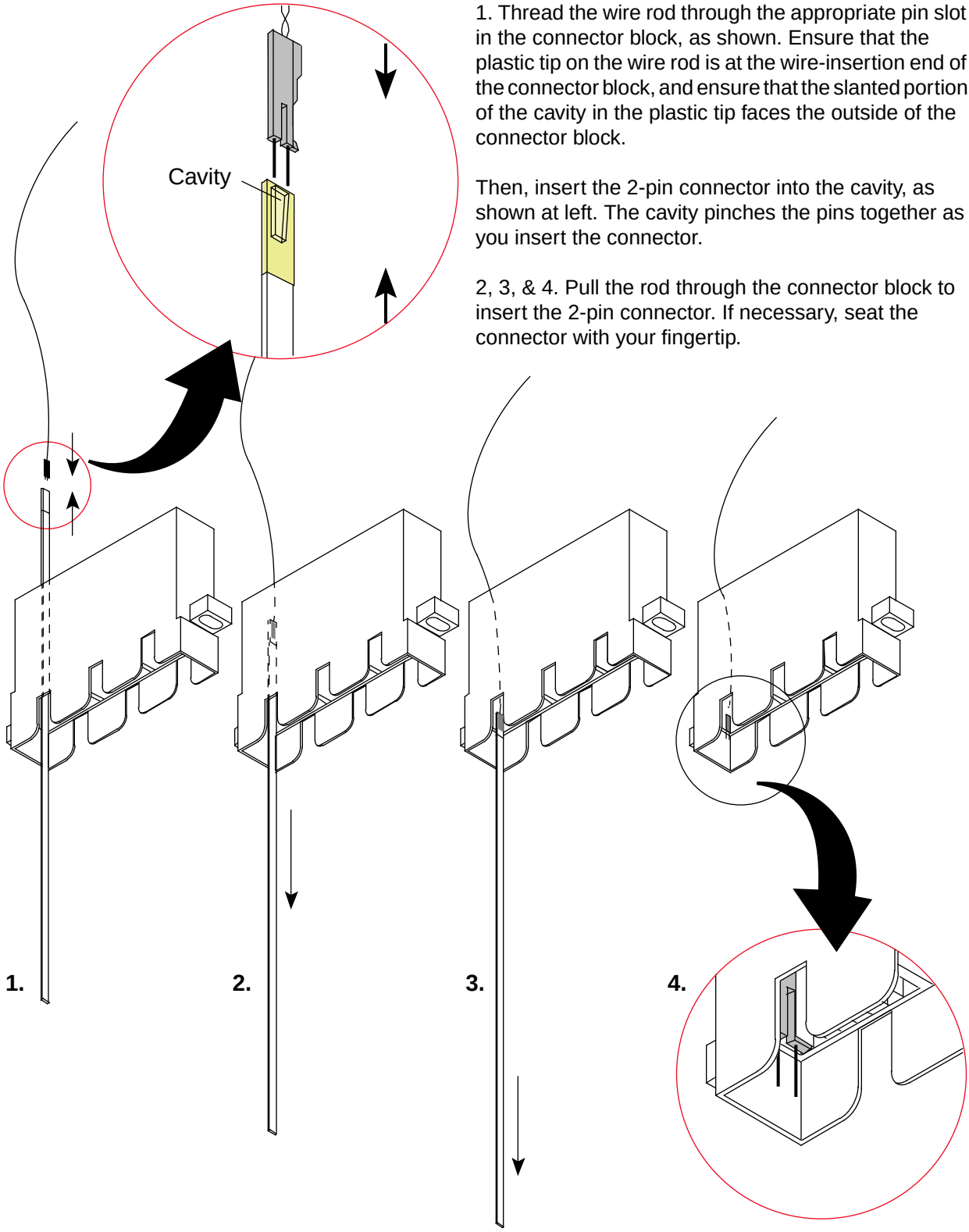

1. Thread the wire rod through the appropriate pin slot in the connector block, as shown. Ensure that the plastic tip on the wire rod is at the wire-insertion end of the connector block, and ensure that the slanted portion of the cavity in the plastic tip faces the outside of the connector block.

Then, insert the 2-pin connector into the cavity, as shown at left. The cavity pinches the pins together as you insert the connector.

2, 3, & 4. Pull the rod through the connector block to insert the 2-pin connector. If necessary, seat the connector with your fingertip.

Prepare the System for the Upgrade

You must complete the following tasks to prepare the system for rail insertion and wiring:

- Remove power from the system
- Remove rear door(s)
- Remove access panels
- Open the intercabinet cable ducts if applicable
- Remove the clock module and selected PEMs
- Prepare the clock connectors for wire insertion
  - Remove the slot plugs
  - Unscrew the connectors and pull them into the card cage
- Remove the slot covers where you will add rails

The following subsections describe these tasks:

Remove Power from the CRAY T3E Cabinets

1. Ensure that the operating system is down. (If desired, make a backup copy of the operating system before you begin the upgrade.)

2. Open the front door of each CRAY T3E cabinet in the system. (The front of the cabinet is the end with the Cabinet Power switch, WACS display, and power supplies.)

   a. Each door has two latches: top and bottom. For each latch, insert a 4-mm ball-end hex (allen) wrench into the latch and turn the latch counterclockwise 1/4 turn.

   b. Grasp the door and swing it open. (The door contains a hole that aids in opening. You may insert a tool, such as a #2 Phillips screwdriver, in the hole to improve grip and serve as a door handle. **NOTE:** Be careful not to press the tool against the fiberglass trim. The fiberglass cracks and chips easily.)

3. Open each cabinet's main disconnect circuit breaker (CB1) and open the customer's wall breaker(s). Then unplug each cabinet. Cover the plug with a lockout/tagout device and then lock and tag the device.

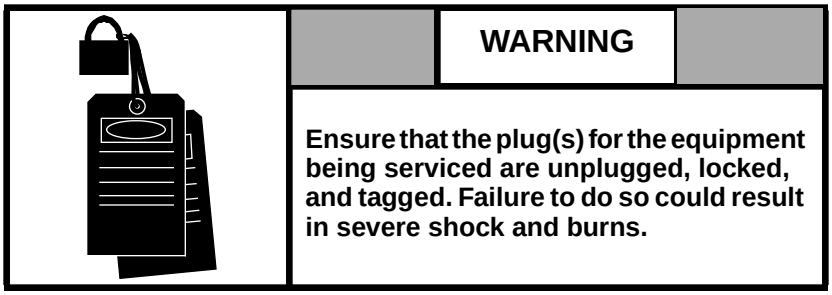

NOTE: You may also lock and tag the customer breaker(s).

Remove the Rear Door(s)

To improve access, remove the following doors from the cabinets. Use the procedure that follows the list when you remove a door.

- Remove the rear door of the cabinet that contains the clock module where you will insert clock wires. This will improve access to the connectors and wiremat.
- Remove the rear door of any cabinet between the cabinet that contains the clock module and the cabinet where you will add rails.

Use the following procedure to remove each rear door:

1. Open the rear door.
2. Use a #2 Phillips screwdriver to disconnect one end of the ground wire that connects to the top of the door. (Replace the screw and washer in the threaded hole.)
3. Carefully lift the door straight up about 1 in. (2.54 cm) until the door hardware clears the frame hinge, then remove the door.
4. Set the door in a protected location.

CAUTION
The edges of the fiberglass door panel are fragile. Be careful not to drop the door. When you set the door aside, ensure that the weight is supported by portions of the fiberglass that can bear the weight. Do not rest the door on the edges of the fiberglass trim.

Remove Access Panels

Use the following procedure to remove access panels from the rear (module side) of the cabinets where you removed rear doors and from the cabinet where you will add rails. Figure 103 shows the panel locations.

1. Disconnect the clock switch connector and remove the blower exhaust shield from each cabinet. Six #1 Phillips screws secure each blower exhaust shield.

2. Remove the module panel from each cabinet. Eight 1/4-turn captive screws secure each module panel.

3. Remove the upper plenum panels from each cabinet. Six #1 Phillips screws hold each of the panels.

4. Remove the I/O panel from each cabinet. Six 1/4-turn captive screws secure the I/O panel.

5. Remove the lower plenum panels from each cabinet. Each lower plenum panel is held in place by 4 screws across the bottom and by 6 other screws around the perimeter of the panels. Remove the bottom screws first.

6. Remove the #1 Phillips screws from each side of the I/O bulkhead in each cabinet.

Figure 103. Access Panel Locations

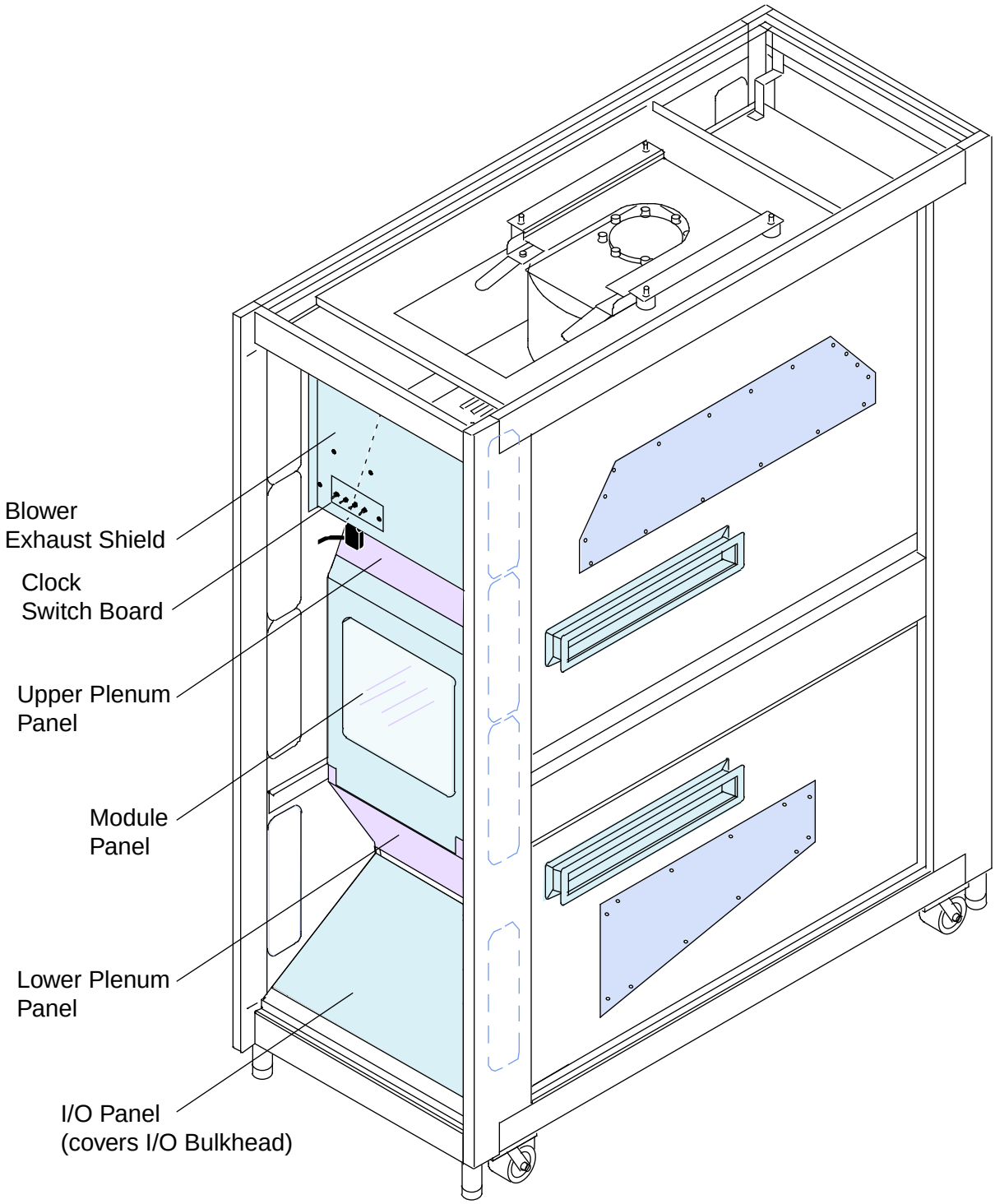

Open the Cable Ducts

NOTE: This procedure is not necessary if you add rails to cabinet 0.

Use the following procedure to open the top and bottom cable ducts between the cabinet where you will add PEMs and the cabinet that contains the clock module that supports them (and any other cabinet where you will reconfigure the torus):

1. Loosen the 5 Phillips screws that secure each cable duct seal. (The cable ducts are located on each side of the cabinet as shown in Figure 104.)

2. Open the duct seals to provide room for the new wires and cables. (The duct seals contain slots that move up and down on the Phillips screws as shown in Figure 105.)

3. Secure the duct seals in the open position.

Figure 104. Intercabinet Cable Duct Locations

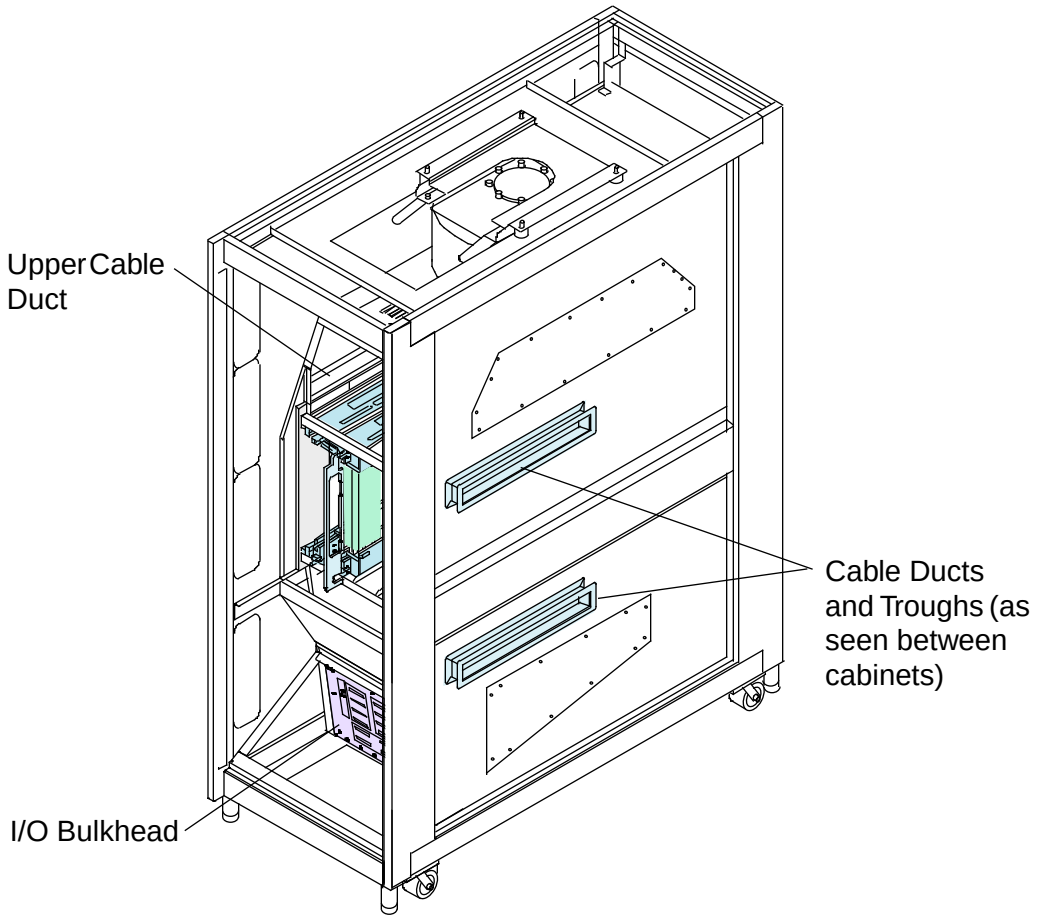

Figure 105. Duct Seals (viewed from inside cabinet)

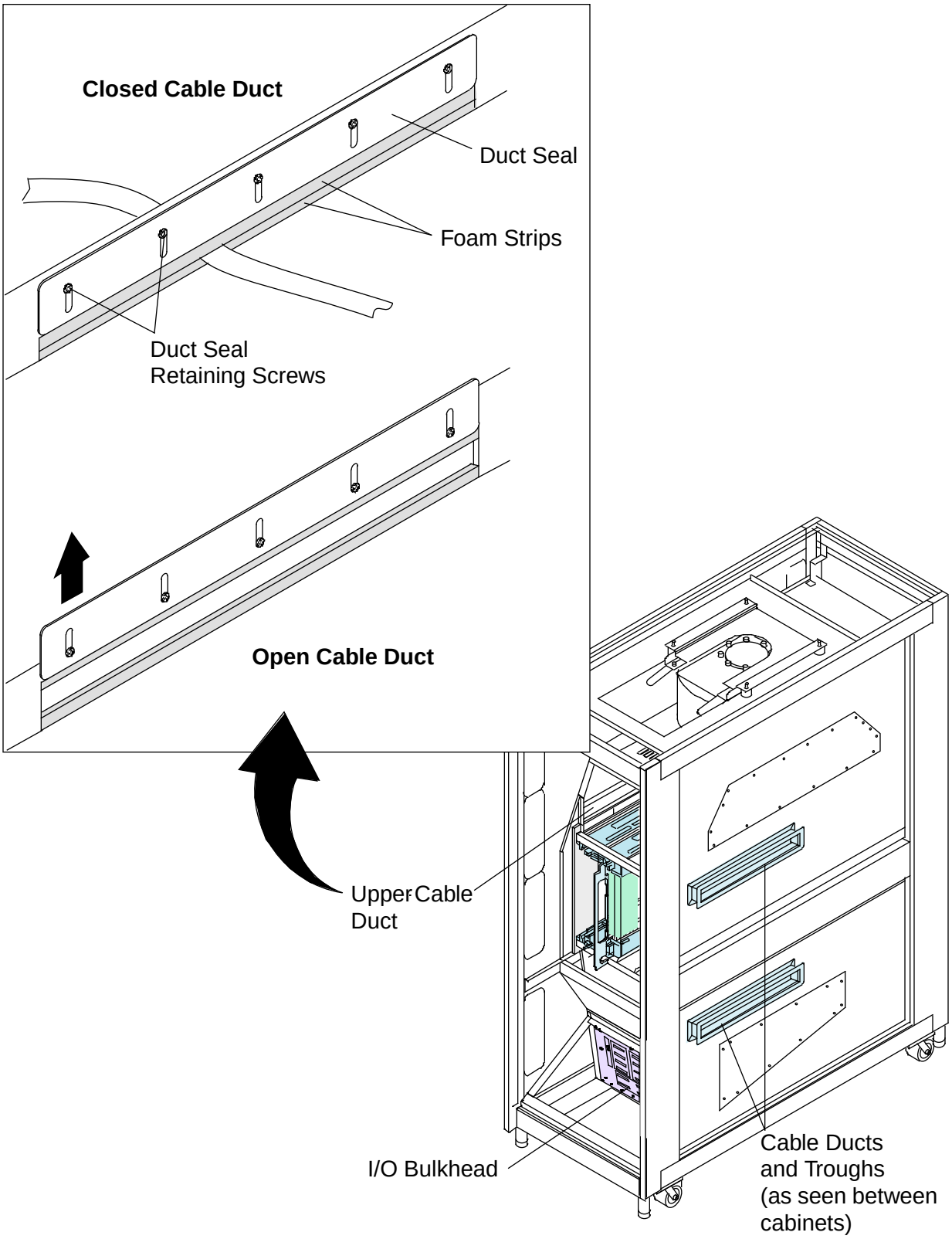

Remove Clock and Logic Modules

When you add PEMs, you must connect clock wires and boundary scan wires to the clock module that supports those PEMs. To make these connections, you must remove the clock module. You must so remove adjacent PEMs to provide access to the connectors; you will access the connectors via the card cage. In addition, you must remove modules from the cabinet where you will add rails.

We recommend that you leave a **maximum** of two PEMs (slots 1 and 2) in the cabinet where you connect clock wires; we also recommend that you remove the two PEMs that are adjacent to any slot where you will add rails. However, to help prevent module damage, you may want to remove *all* modules from any cabinet where you work.

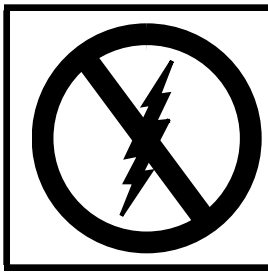

CAUTION

Observe all ESD precautions. Failure to do so could result in damage to the equipment. Ensure that you do not touch any logic components with your skin, tools, or clothing.

1. Prepare an ESD-safe surface (or surfaces) where you can set the clock module and PEMs. (The ESD mat can hold 4 modules if they are arranged carefully.)

NOTE: If you do not have sufficient ESD-safe surface area, you may leave the clock module and its adjacent PEMs in place, remove PEMs from the cabinet where you will install new rails, then install the rails. After you install the rails, you can remove the clock module and adjacent PEMs, then complete the wiring. If necessary, you can insert one or more PEMs in the new rails while you complete the wiring.

2. Uncam the modules that you will remove (clock module, PEMs near the clock module, plus PEMs adjacent to the slots where you will add rails). Figure 106 shows module camming.

NOTE: Leave the cams in place when you remove (and insert) modules. This will prevent bottom shuttles from slipping down and causing damage.

3. Remove each module using the following steps:

   a. Use a 3-mm hex wrench to remove the module setscrew from the module handle. Refer to Figure 107.

   b. Grasp the module handle with both hands and pull with firm even pressure until the module is halfway out of the cabinet.

   c. When the module is halfway out of the cabinet, place one hand on the underside of the module/heat sink assembly for support. For example, place your right hand (flat with palm up) beneath the module.

   d. With one hand on the module handle and the other hand supporting the bottom of the module, pull the module from the cabinet.

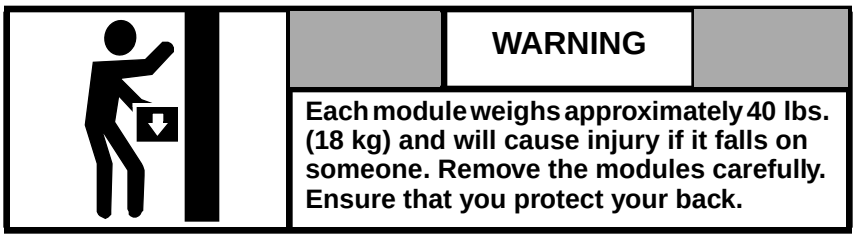

4. Place each module on the ESD-safe surface. Ensure that the module rests upon the module heat sink.

Figure 106. Module Camming

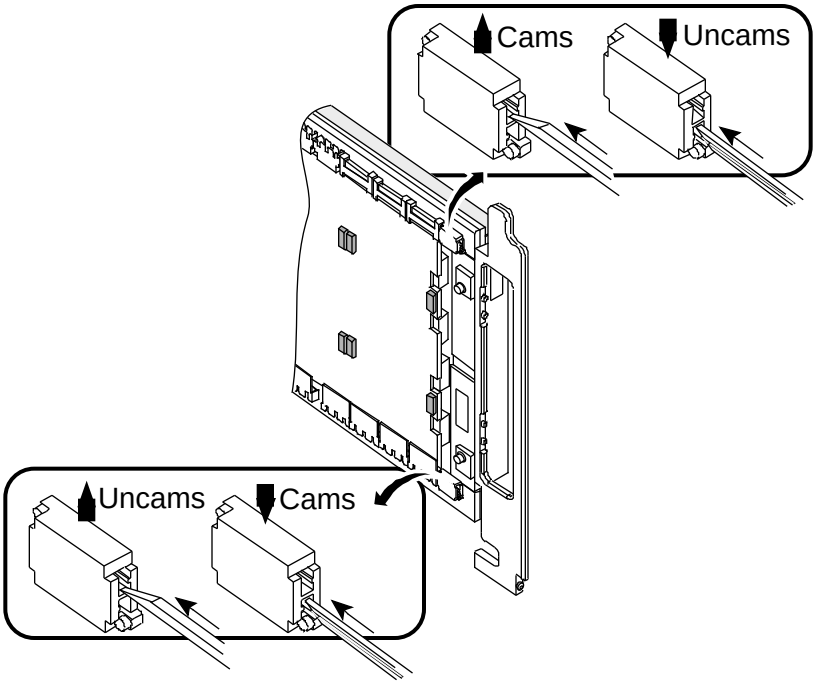

Figure 107. Module Setscrew Locations (Rear View of Cabinet)

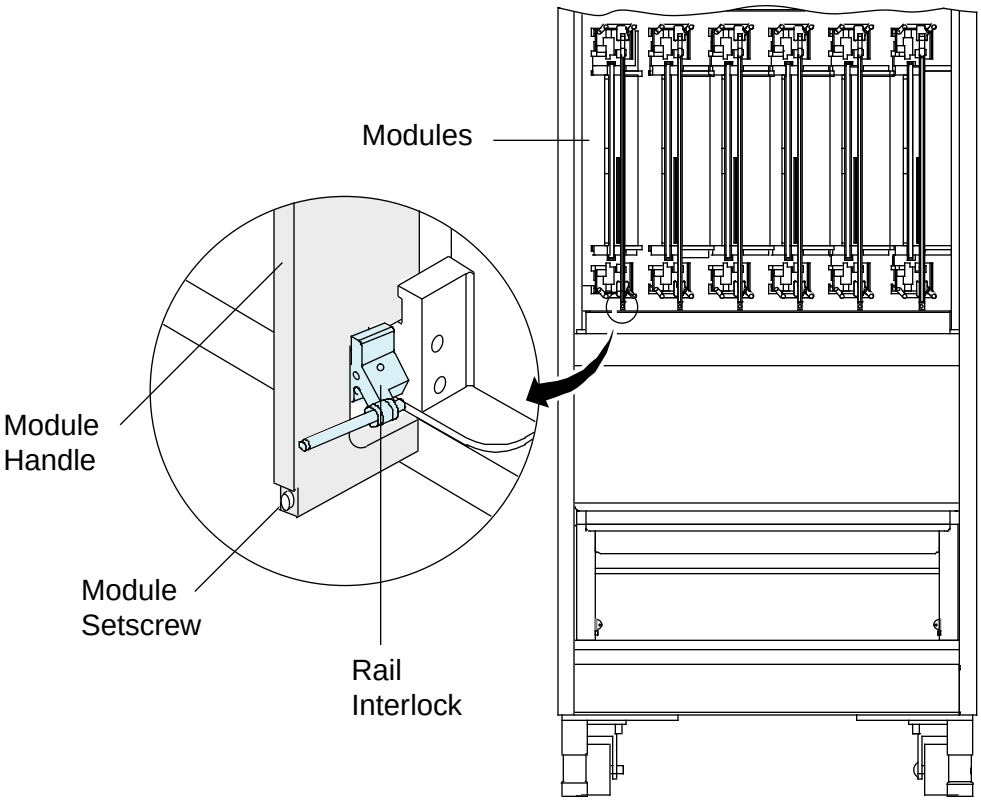

Prepare the Top Clock Rail for Wire Insertion

Perform the following steps to prepare the clock rail connectors for wire insertion. If you add rails to cabinet 0, 1, or 2, complete the procedures for clock module 0's top rail. If you add rails to cabinet 3, 4, or 5, complete the procedures for clock module 1's top rail.

Remove the Slot Plugs

Remove the foam plugs that seal the three connector slots in the top clock rail. Refer to Figure 108.

Later, you will insert clock and boundary scan wires through these slots. The clock and boundary scan wires pass through the plugs as shown in Figure 109.

Figure 108. Removing Plugs from the Top Clock Rail

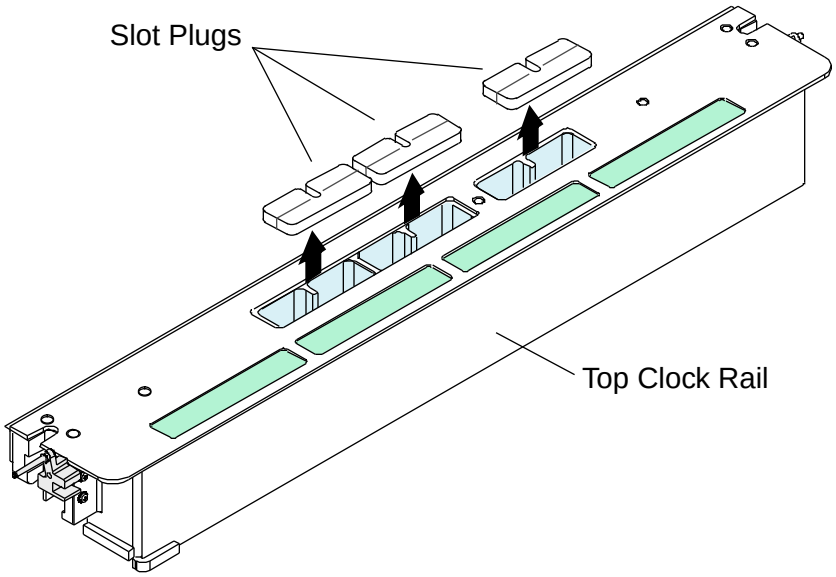

Figure 109. Inserting Wires through Slot Plug

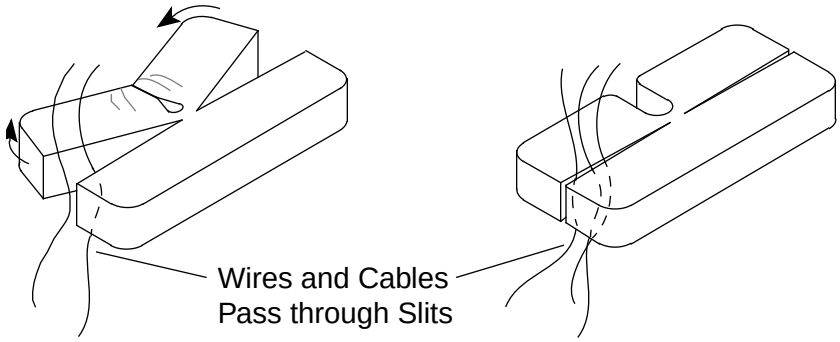

Remove Clock Connectors zae – zah

Use the following procedure to remove the rail connectors from the top clock rail and pull them into the card cage, where you can access them easier:

1. Loosen the wires that connect to the clock rail by disconnecting the tie wraps that hold the wires to the wirerack. Refer to Figure 110. Most of the tie wraps are reusable; however, in some cases, you may need to cut them.

   NOTE: Be careful not to cut any wires or to let the wires uncoil.

Figure 110. Loosening the Wires

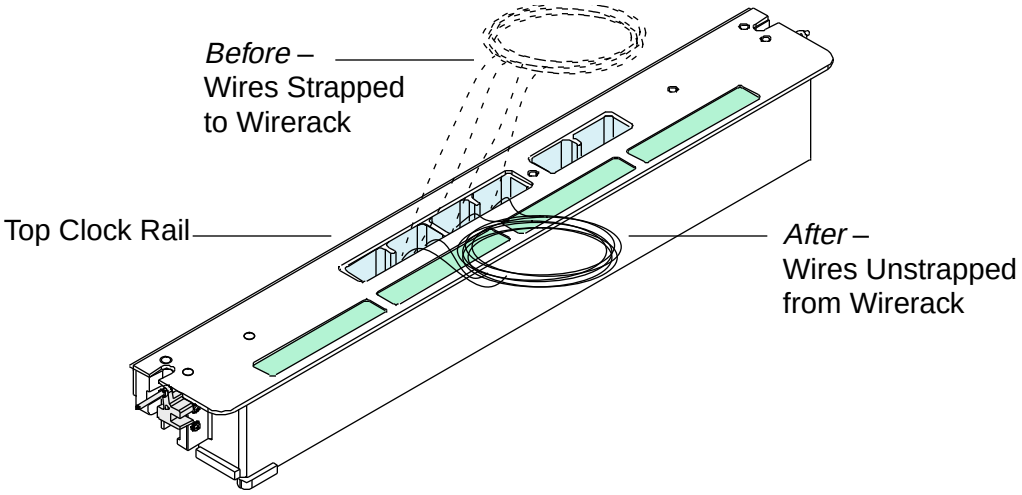

2. Set a sheet of ESD-safe foam or plastic in the card cage to catch any screws, spacers, or tools that you might drop.

3. Remove connectors zae, zaf, zag, zah:

   a. From the inside of the card cage, use a 0.5-in. hex (allen) wrench to remove the hex screws and brass spacer from rail connector zae. Refer to Figure 111 and Figure 112.

   NOTE: The first hex screw on connector zae has a brass spacer.

   b. Remove the hex screws from the next 3 connectors: zaf, zag, and zah.

   c. Loosen but *do not* remove the last hex screw from connector zai. (You will not connect any wires to connector zai.)

   d. Carefully slide connector zae away from the adjacent connector and then down into the card cage. Repeat this step for the next three connectors (zaf, zag, zah).

Figure 111. Clock Connector Locations

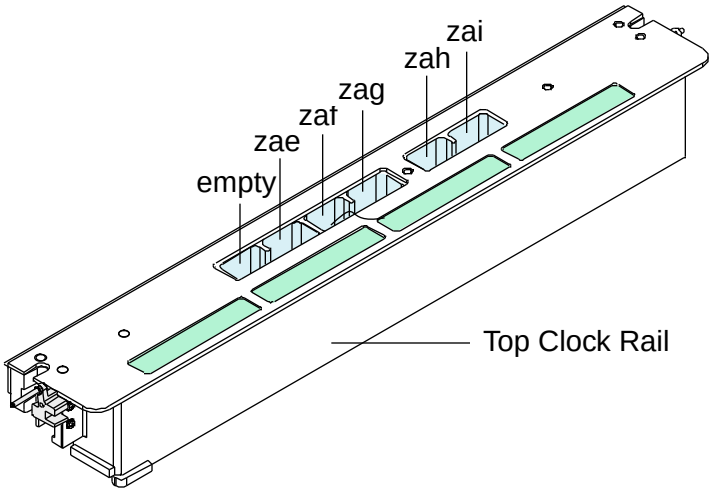

Figure 112. Removing Clock Rail Connectors

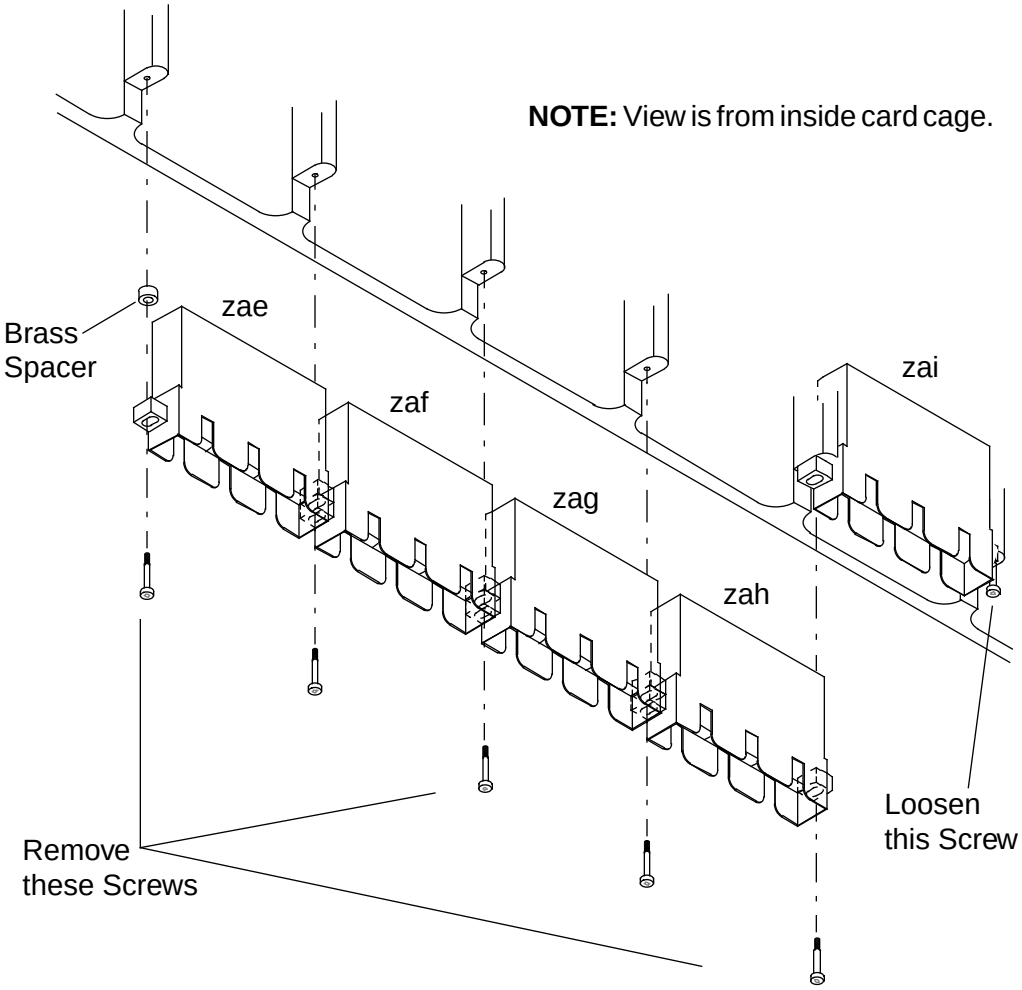

4. Optional: Remove the associated connector springs. (Remove them only if they come off easily.) To remove a spring, insert the tip of a pair of tweezers between the spring and the edge of the rail, then pry the spring loose as shown in Figure 113.

   NOTE: Removing the springs ensures that you do not accidently wrap a wire around the spring when you reinsert the connectors. If you guard against this, you may leave the springs on the rail.

Figure 113. Removing a Connector Spring

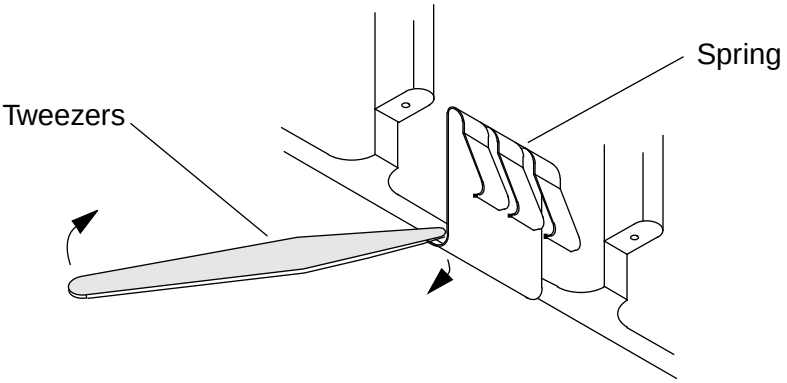

5. Remove the springs, screws, and brass spacer(s) from the cabinet and set them in a safe location.

6. Carefully remove the plastic connector pin lock (P/N 01775900) from the module side of each connector. Be careful not to damage any pins.

   Pry the pin lock loose from the connector with a dental pick. At various locations around the pin lock, place the tip of the dental pick between the edge of the pin lock and the connector and pry, as shown in Figure 114. (You will replace the pin lock with a new one.)

Figure 114. Removing a Connector Pin Lock

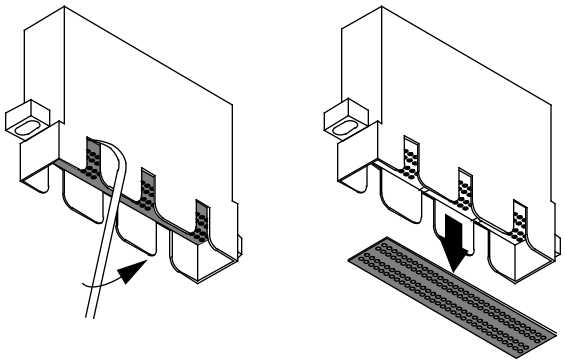

Remove the Slot Covers

1. Remove the power supply slot covers from the slots where you will add rails. Remove the top slot covers first, then remove the bottom slot covers. There is one #3 Phillips screw at each end of a slot cover.

   You may need to remove a power supply to access the adjacent slot covers.

2. Remove the module slot covers from the slots where you will add rails. Remove the top slot covers first, then remove the bottom slot covers. There is one #3 Phillips screw at each end of a slot cover.

3. Set the slot covers and screws aside. Keep them on site in case of future module/power supply removals.

Figure 115. Slot Covers – Cutaway View of Card Cage

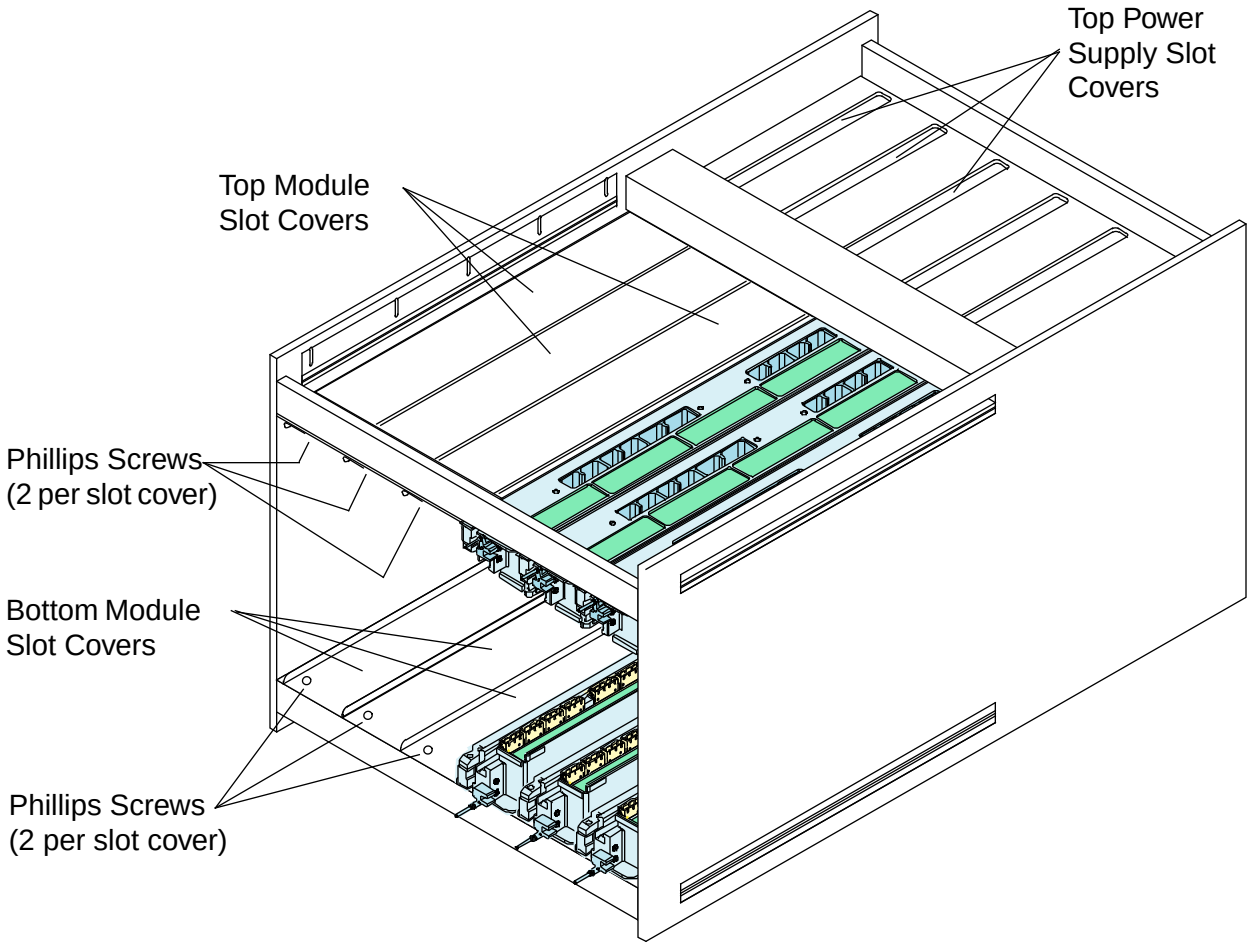

Install the Rails

Use the following procedures when you install the power supply rails and PEM rails. The power supply rail and lower PEM rail installations are not difficult; however, the digital ground bus limits access to the far shoulder screws. The top PEM rail installation can be difficult; read the procedure carefully.

Install the Power Supply Rails

Use the following procedure for each power supply rail that you install. Install the top rails before you install the bottom rails. You will need a 4-mm hex (allen) wrench and 8 shoulder screws (P/N 57161700) per slot.

NOTE: This procedure may require two people. Have the wrench and screws within reach when you install the top rails.

1. Check the new rail for damper function, obvious gasket defects, etc.

2. While you hold the rail outside the cabinet, insert a shoulder screw (P/N 57161700) through one of the screw holes on the module end of the rail. Figure 116 shows the locations of the screw holes.

Figure 116. Power Supply Rails – Shoulder Screw Locations

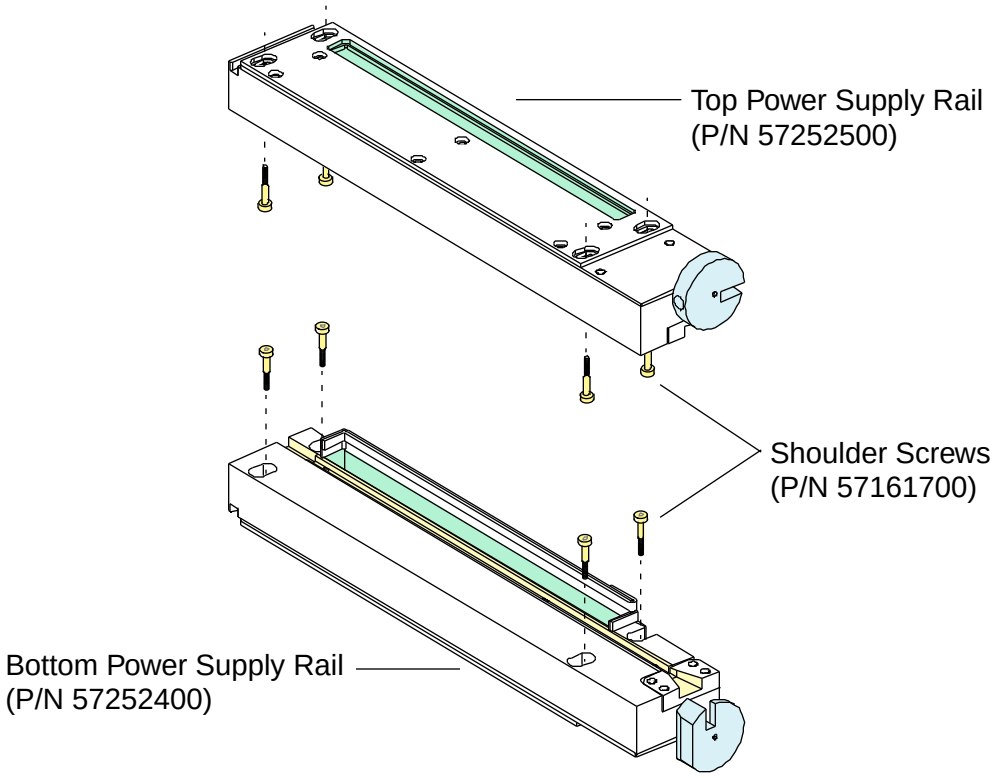

3. Position the rail in the chassis, with the module end of the rail against the crossbar in the card cage.

4. Hold the rail in place and secure it with shoulder screws:

   a. Tighten the shoulder screw you inserted earlier, then unscrew the shoulder screw 1 revolution.

   b. Insert a shoulder screw through one of the front screw holes in the rail (on the power supply insertion end of the rail). Thread the screw into the hole in the card cage and tighten the screw, then unscrew it 1 revolution.

   c. Insert the other 2 shoulder screws and tighten them finger tight, then unscrew them 1 revolution.

   e. Align the rail parallel with the other rails (by eye).

   NOTE: Leave the rail loose temporarily. You will tighten it after you install the PEM.

5. Repeat the previous steps for each power supply rail that you must add.

Install the Top PEM Rails

Use the following procedure for each top PEM rail (P/N 57255300) that you install. Install (but do not wire) the top rails before you install the bottom rails. You will need two 4-mm hex (allen) shoulder screws (P/N 57161700) per rail.

Do not cut the tie wraps on the various cables and wires that connect to the rail. The bound cables and wires will make it easier for you to insert the rail.

NOTE: This procedure may require two people. Have the wrench and screws within reach when you install the top rails.

1. Check the new rail for damper function, obvious gasket defects, etc. Ensure that the dampers are fully open when the interlock is in the engaged position. Ensure that the damper interlock rod is secured by the retaining washers and can not slide so that it interferes with installation.

2. Set the rail aside and go to the slot in card cage where you will insert the rail. Insert a shoulder screw (P/N 57161700) in the slot's threaded hole near the power supplies. Tighten the screw until finger tight, then unscrew it 1 turn. This screw will help hold the rail in place during the installation.

Figure 117. PEM Rails – Cutaway View of Card Cage

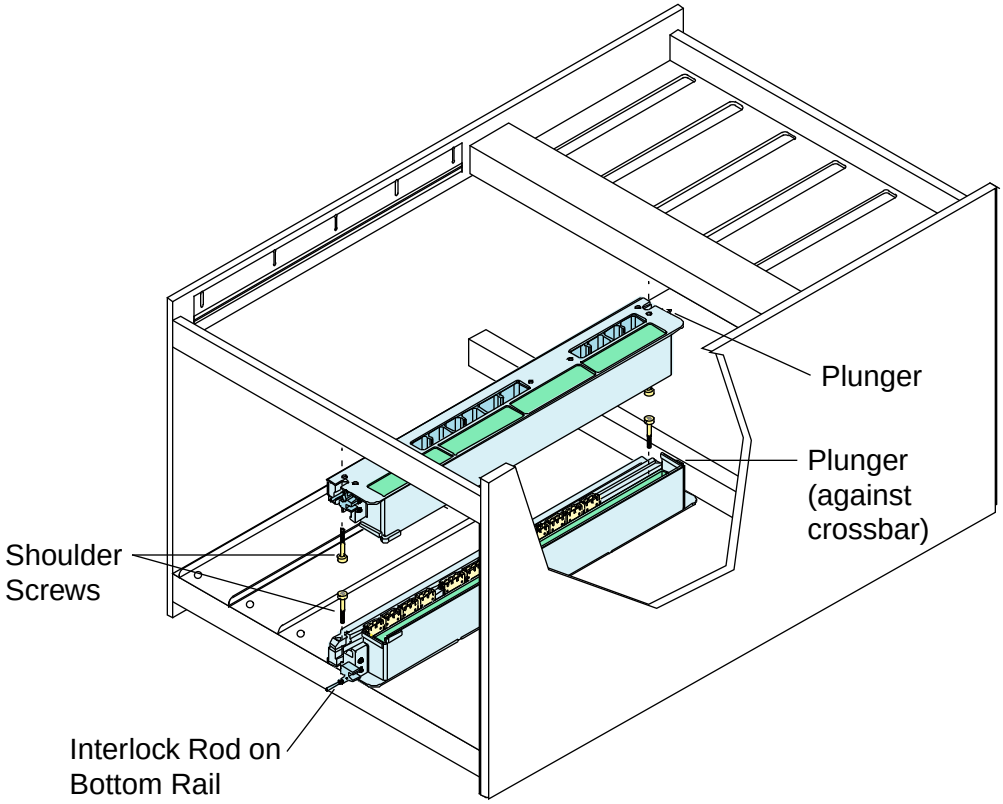

3. Insert the new rail in the chassis. Figure 118 illustrates the steps.

   a. Hold the rail at a 15 degree angle (approximately) with the power supply end raised and with the module insertion end closer to the floor.

   b. Slide the rail onto the screw you installed in Step 2.

   c. Push the plunger on the power-supply end of the rail against the crossbar in the card cage, as shown in Figure 118.

   NOTE: Ensure that the plunger does not slip below the crossbar.

   d. While you press the plunger against the crossbar, move the wires and cables through the slot opening.

   e. While you continue to press the plunger against the crossbar, rotate the rail up and into the installed position.

CAUTION
Ensure that you do not pinch any wires or cables between the rail and the top of the module box.

   f. Tighten the shoulder screw you inserted earlier until it is finger tight. Use the 4-mm hex (allen) wrench.

   g. Insert a shoulder screw at the other end of the rail until finger tight.

   h. Ensure that the rail aligns with the power supply rail, then tighten the screws hand tight.

   i. Ensure that the rail has a little *play* or *give*. It should move slightly toward the power supply when pushed.

Figure 118. Installing a Top PEM Rail – Side View

Step 2: Fully install a shoulder screw at the power supply end of the module slot. Then unscrew it 1 revolution.

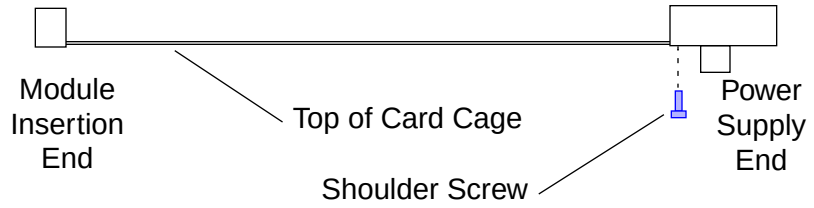

Steps 3a through 3b: Hold the rail at an angle and slide the rail onto the screw.

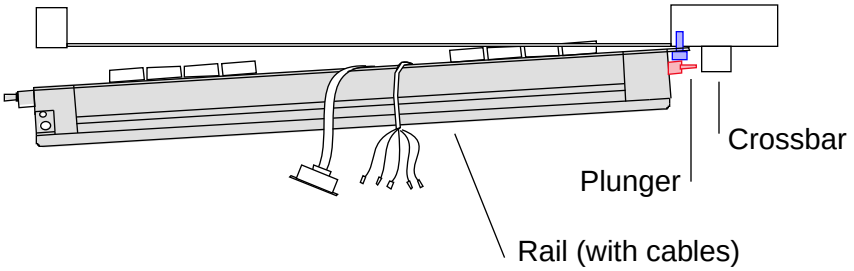

Steps 3c through 3d: Press the plunger against the crossbar. Then pull the cables up through the slot opening.

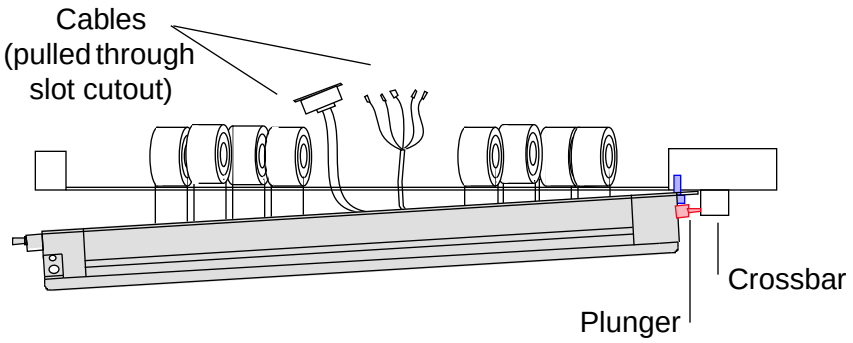

Steps 3e through 3g: Rotate the rail into position, tighten the screw you installed earlier, and insert and tighten the other screw.

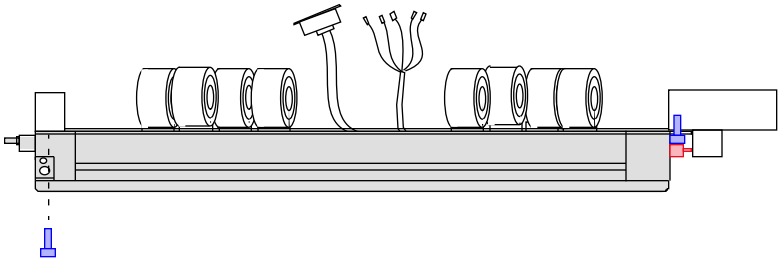

Install the Bottom PEM Rails

Use the following procedure for each bottom PEM rail (P/N 57255000) that you install. You will need two 4-mm hex (allen) shoulder screws (P/N 57161700) per rail.

1. Check the new rail for damper function, foam defects, etc. Ensure that the dampers are fully open when the interlock is in the engaged position. Ensure that the damper interlock rod is secured by the retaining washers and can not slide so that it interferes with rail installation.

2. Set the rail aside and go to the card cage. Insert a shoulder screw (P/N 57161700) in the threaded hole near the power supplies. This screw will help hold the rail in place during the installation.

3. Insert the new rail in the chassis:

   a. Route the torus and GigaRing cables through the slot opening.

   b. Slide the rail onto the screw you installed in Step 2.

CAUTION
Ensure that you do not pinch any wires or cables between the rail and the top of the module box.

   c. Push the plunger on the power-supply end of the rail against the crossbar in the module box.

   d. Use the 4-mm hex (allen) wrench to tighten the shoulder screw you inserted earlier until it is finger tight.

   e. Insert a shoulder screw at the other end of the rail. Tighten the screw until finger tight.

   f. Ensure that the rail aligns with the power supply rail, then tighten the screws hand tight.

   g. Ensure that the rail has a little *play* or *give*. It should move slightly toward the power supply when pushed.

Cable the System

This section contains details on the internal cabling and wiring that you must complete when you add one or more PEMs to an existing CRAY T3E air-cooled system.

We recommend that you complete the cabling tasks in the following order:

- Complete the clock connections
- Complete the boundary scan connections
- Reinstall the connectors in the top clock rail
- Connect the PEM-to-WACS cables
- Reconnect the torus interconnect network
- Connect the PEM-to-bulkhead GigaRing cables
- Connect the external GigaRing cables (if applicable)
- Close the cable ducts (if applicable)

Table 15 provides an overview of the wires that you must connect when you add rails to your system. The following pages provide procedures that you must read before you attempt any of the connections.

Table 15. Internal Wiring Overview

Connect the wires listed below?	When you add rails to:	
	Cabinet 0, 1, or 2	Cabinet 3, 4, or 5
Clock wires from each new PEM to the clock	Yes; connect each PEM to clock module 0	Yes; connect PEMs to clock module 1
Scan wire 15237701 from new PEMs to the clock	Yes; connect each PEM to clock module 0	Yes; connect PEMs to clock module 1
Scan wire 15237601	Yes; reconnect to last PEM in cabinet 0, 1, or 2	No
Jumper wire 15223802	No	Yes; reconnect to last PEM in system
Daisy chain wires	Yes; connect new PEMs to scan chain	Yes; connect new PEMs to scan chain
PEM-to-WACS	Yes; connect each top rail to the control bulkhead	Yes; connect each top rail to the control bulkhead
Rewire Torus	Yes	Yes
GigaRing PEM-to-bulkhead	Yes; connect each bottom rail to the I/O bulkhead	Yes; connect each bottom rail to the I/O bulkhead

Connect the Clock Wires

NOTE: In the following procedure, you drop the clock connectors into the card cage and make the connections while working in the card cage. You may also pull the connectors up into the wiremat and work there. If you choose to pull the connectors into the wiremat, continue to use the following procedure, but make the necessary adjustments.

Background

You must make two clock connections from each PEM that you add when you upgrade a CRAY T3E system:

- You must make a direct *system clock* connection (P/N 15223701) from each new PEM's top rail to the clock module's top rail.

  You connected one end of the wire to connector zah, pin 03, of the PEM rail during the "Insert Clock Wires in the New PEM Rails" procedure. You will connect the other end to connector zag in the clock rail.

- You must make a direct *GigaRing clock* connection (P/N 15224008) from each new PEM's top rail to the clock module's top rail.

  You connected one end of the wire to connector zah, pin 07, of the PEM rail during the "Insert Clock Wires in the New PEM Rails" procedure. You will connect the other end to connector zah in the clock rail.

The clock wires should be labeled on each end with the slot, connector, and pin location as shown in Figure 119. If they are not labelled, you must label them.

NOTE: Always double-check the connections to ensure proper location and that the wires are not damaged. If you connect a 2-pin connector to the wrong location, refer to Appendix A for a *removal procedure*.

Figure 119. Example – Clock Wire Labels

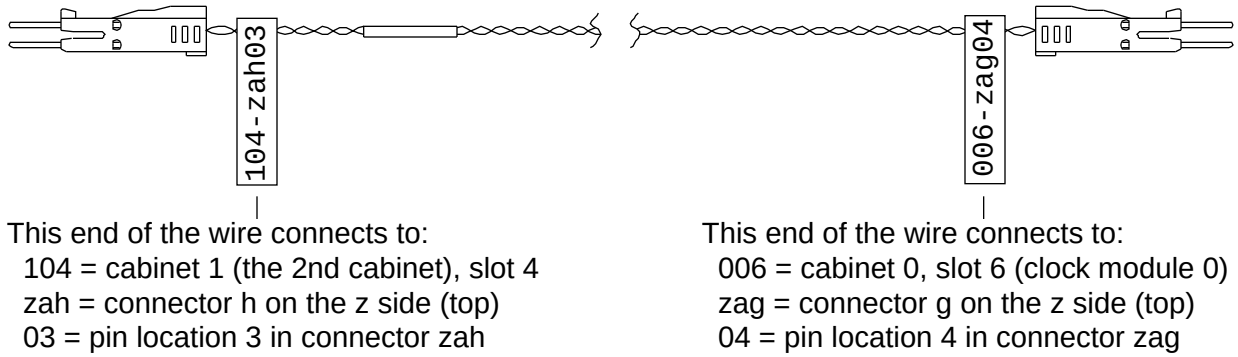

Figure 120 provides an overview of the clock connections.

Figure 120. Clock Connections

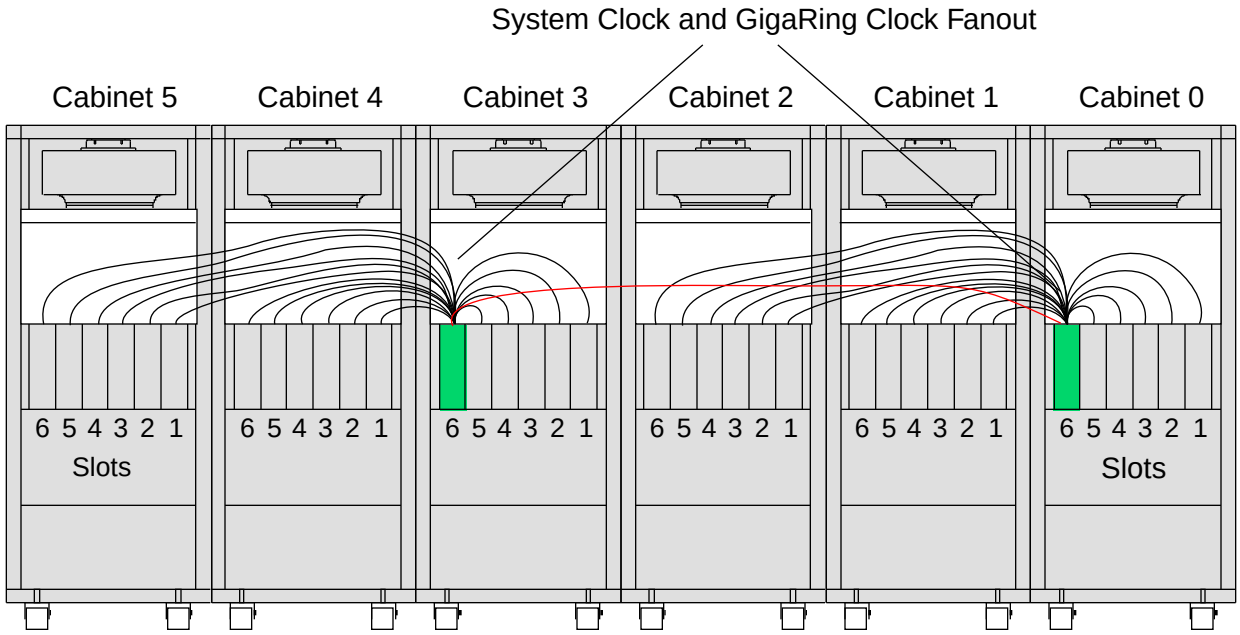

Procedure

1. Locate the clock wires and carefully route them to the top rail of the associated clock module.

   Uncoil enough wire to reach the clock rail, then uncoil an additional 2 ft. (0.6 m). Secure the wire coil with a tie wrap. Do not secure the wires to the wireracks yet. When you complete the wiring, you will remove slack and secure the wires to the wireracks.

   TIP: Use one of the following methods to pass wires between cabinets:

   1) Place heat shrink (approximately 6-in. [15 cm] long) on the end of a thin rod (approximately 8-in. [20 cm] long). Insert the wire's 2-pin connector in the loose end of the heat shrink, then pass the rod through the cable trough and into the adjacent cabinet.

   2) Place the wire in a small, stiff plastic bag, then carefully pass the bag through the cable duct between cabinets.

   3) Lay the laminated card (that shows connector locations) in the cable duct, and use it as a bottom surface to help guide the wires.

2. Connect the system clock wires and GigaRing clock wires:

   a. Select a clock wire and refer to its wire label to determine where you should connect it.

   b. Route the wire to the appropriate connector. Pass the wire through the rail and down to the connector, as shown in Figure 121.

Figure 121. System and GigaRing Clock Wire Connections

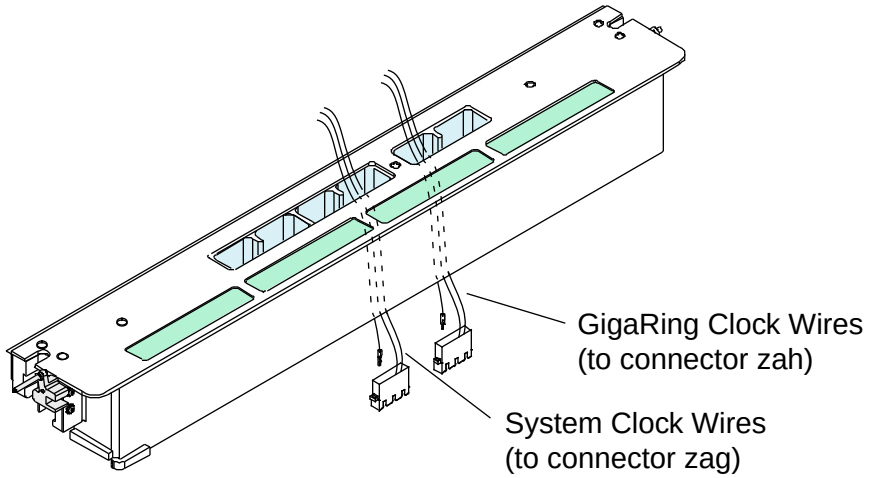

c. Working inside the card cage, determine the exact pin location where you will connect the wire. (On most connectors, pin slot 1 is located in the corner that is marked with red, as shown in Figure 122.)

Figure 122. Pin Locations

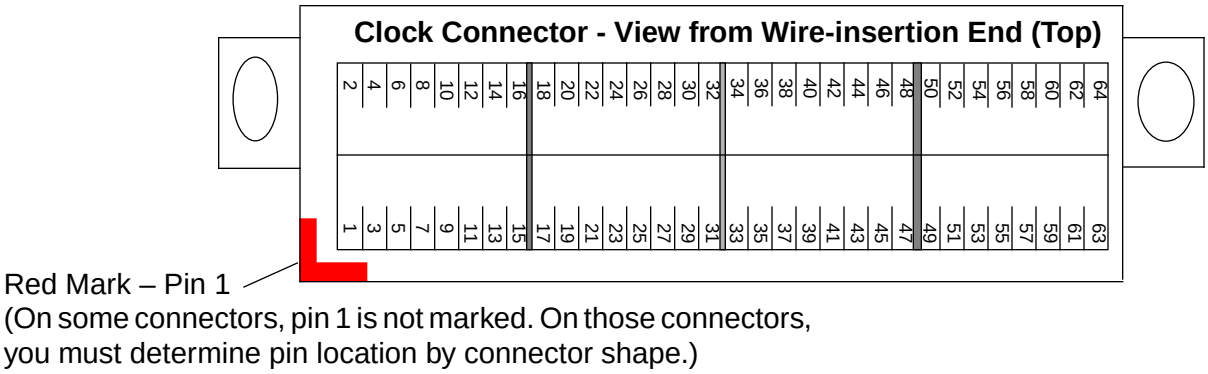

d. Use your fingers (or an appropriate tool such as hemostats) to gently push the 2-pin connector into the pin slot. Then carefully press the top of the 2-pin connector to fully insert it.

The rail connector contains two rows of pins: an even-numbered row and an odd-numbered row. Regardless of where you insert the 2-pin connector, position the *curved* edge of the 2-pin connector toward the *outside* wall of the connector as shown in Figure 123.

CAUTION
Ensure that you do not damage the fragile clock wires when you insert them in the connector.

Figure 123. 2-pin Connector Position

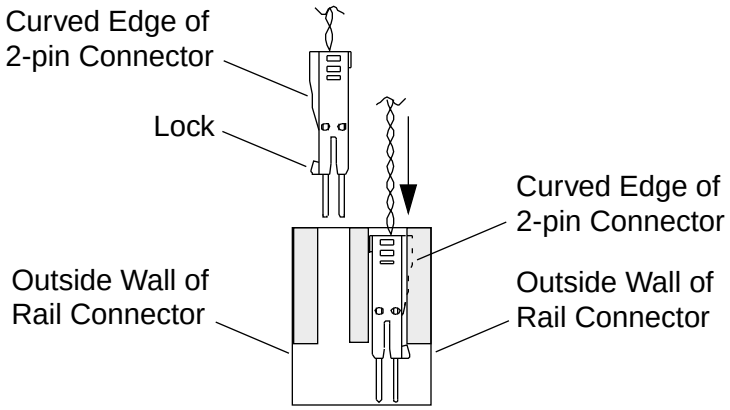

Figure 124 and Figure 125 show two techniques for inserting 2-pin connectors.

Figure 124. Wire Insertion

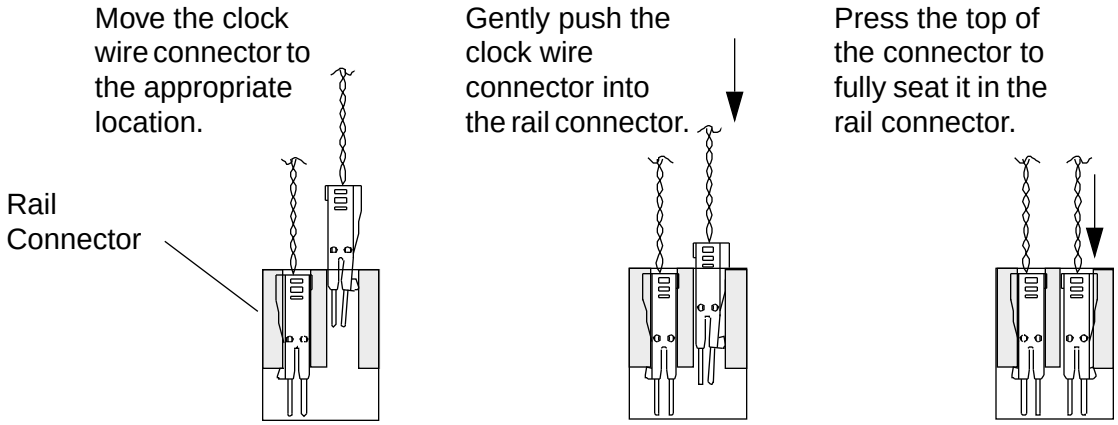

Figure 125. Wire Insertion with Wire Rod

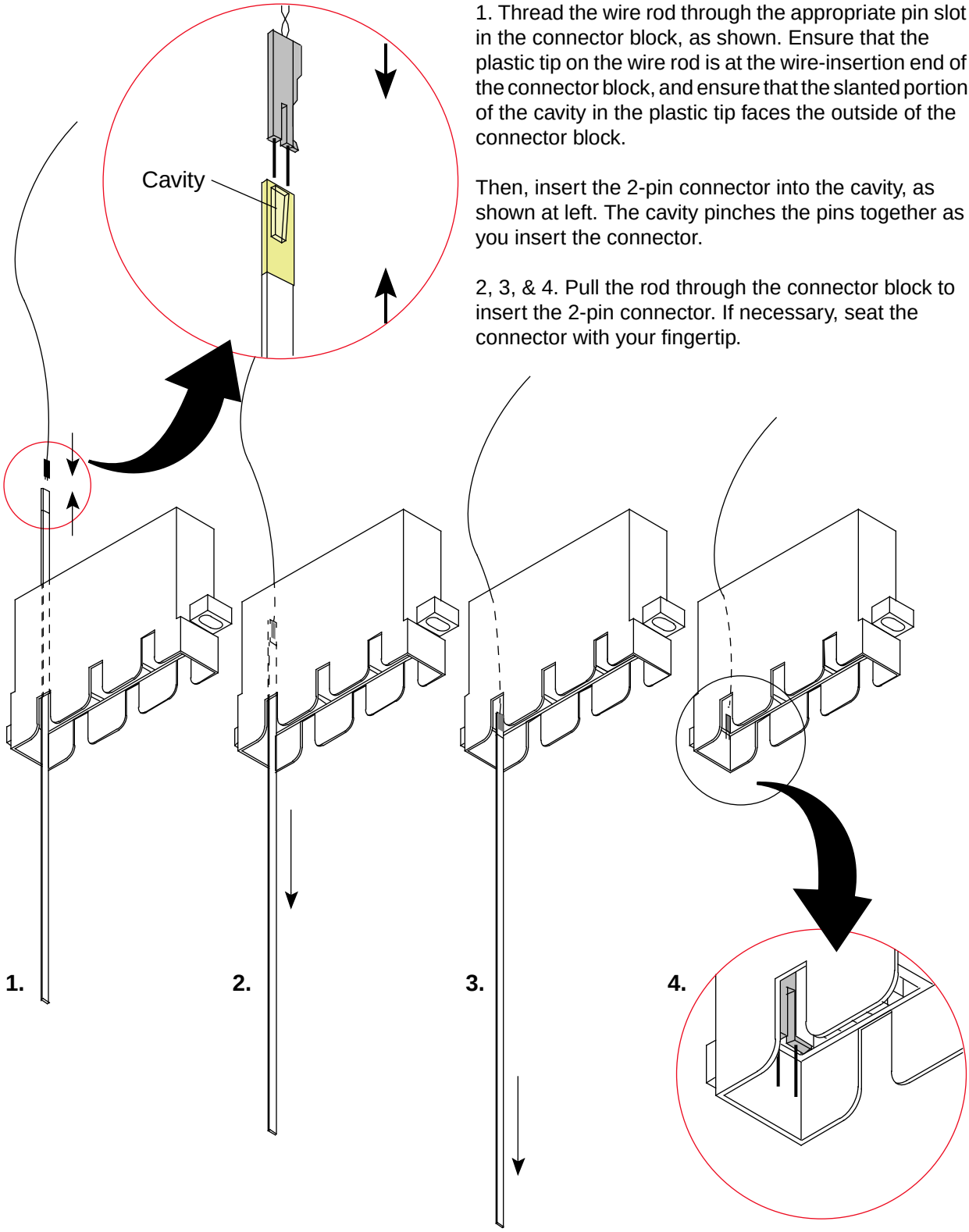

1. Thread the wire rod through the appropriate pin slot in the connector block, as shown. Ensure that the plastic tip on the wire rod is at the wire-insertion end of the connector block, and ensure that the slanted portion of the cavity in the plastic tip faces the outside of the connector block.

Then, insert the 2-pin connector into the cavity, as shown at left. The cavity pinches the pins together as you insert the connector.

2, 3, & 4. Pull the rod through the connector block to insert the 2-pin connector. If necessary, seat the connector with your fingertip.

Connect the Boundary Scan Wires

Overview

You must make the following boundary scan connections when you install new PEMs:

- Two *direct connections* (P/N 15237701*)* to the top rail of the associated clock module for each new PEM in the system. (This connection carries the TCK FO > TCKM and TMS FO > TMSMb fanout signals.)
- If necessary, one *wiremat connection* between the boundary scan wire assembly listed above and each PEM's pigtail (PEM-to-scan cable assembly – P/N 15214300). This connection is probably pre-connected.
- One *wiremat connection* between the scan master PEM and the last PEM in the upgraded system:
    - If you add PEMs to cabinet 0, 1, or 2, you must make a *wiremat connection* (P/N 15237601) between the scan master PEM and the last PEM in scan chain 0. (This connection carries the TDOF[0] < TDOM signals.)
    - If you add PEMs to cabinet 3, 4, or 5, you must make *wiremat connection* (P/N 15223802) between PEM 17 (the PEM in slot 1 of cabinet 3) and the last PEM in scan chain 1. (This connection carries the REPEATI < TDOM signals.)
- *Wiremat daisy chain connections* (P/N 15214300) between each of the new PEMs *and* between the first new PEM (lowest-numbered new PEM) and the last old PEM (formerly the highest-numbered PEM) in the system. (These connections carry the TDOM > TDIM signals.)

Use the following procedures to complete the boundary scan connections. As you work, position the boundary scan wires in relatively safe locations where they will be out of the way during the rest of the cabling procedure. Use tie wraps to secure them to the wirerack; trim the tie wraps as appropriate.

Refer to the Engineering upgrade documentation to verify the connections.

CAUTION
Handle all boundary scan wires carefully. They are fragile and can damage from excessive force or strain.

Connect the 4-pin Edge-to-Pigtail Cables – P/N 15237701

The procedure for connecting the cables is on page 193.

Background

Each top PEM rail comes with one edge-to-pigtail cable assembly (P/N 15237701), which is probably pre-connected to the top rail's pigtail (P/N 15214300). On one end of the cable, there are two 2-pin connectors; on the other end, there is a 4-pin wiremat connector, as shown in Figure 126.

The cable carries TCK FO > TCKM and TMS FO > TMSMb signals from the clock module to the PEM. Clock module 0 supplies the signals to the PEMs in cabinets 0, 1, and 2. Clock module 1 supplies the signals to the PEMs in cabinets 3, 4, and 5, as shown in Figure 127.

Figure 126. Connecting the 4-pin Edge-to-Pigtail Cable

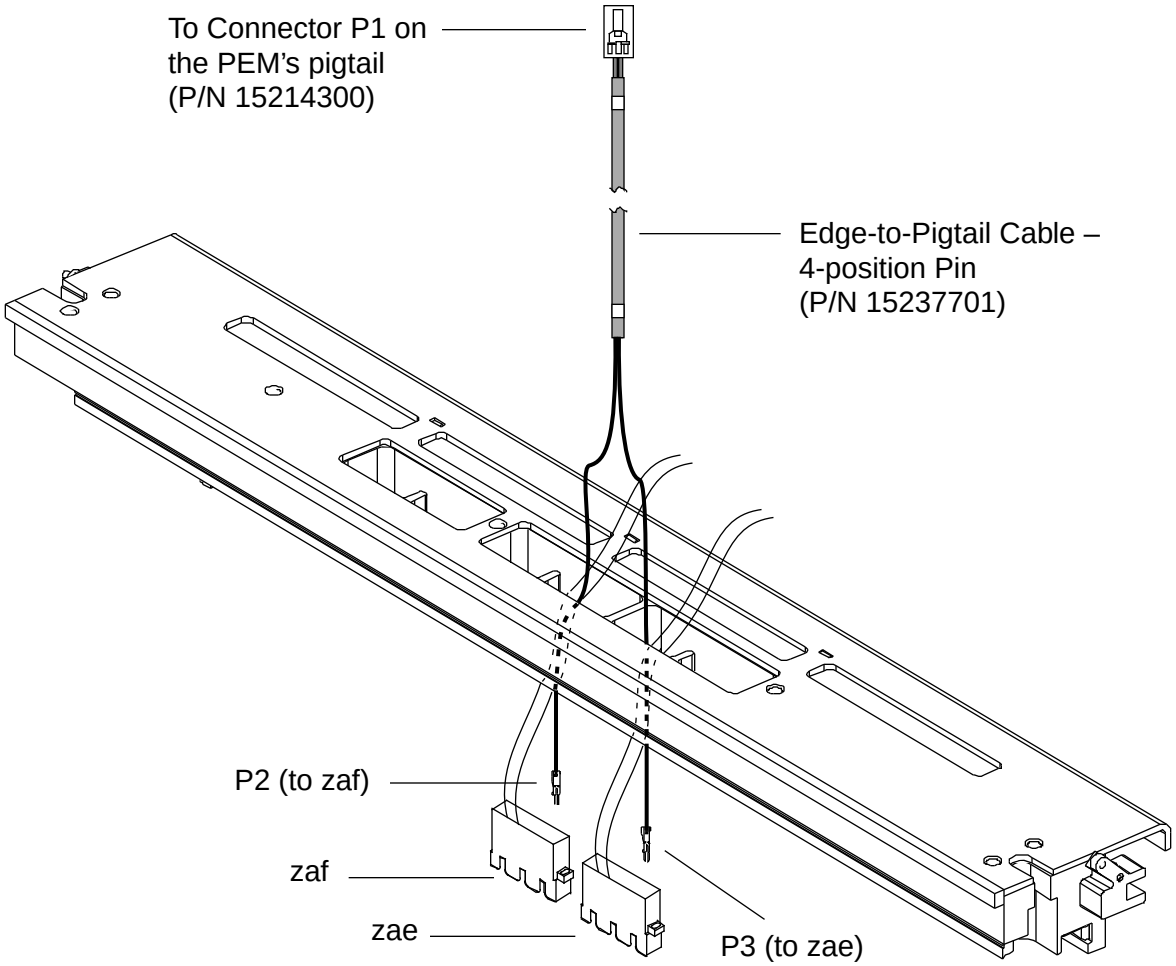

Figure 127. 4-pin Edge-to-pigtail Connections

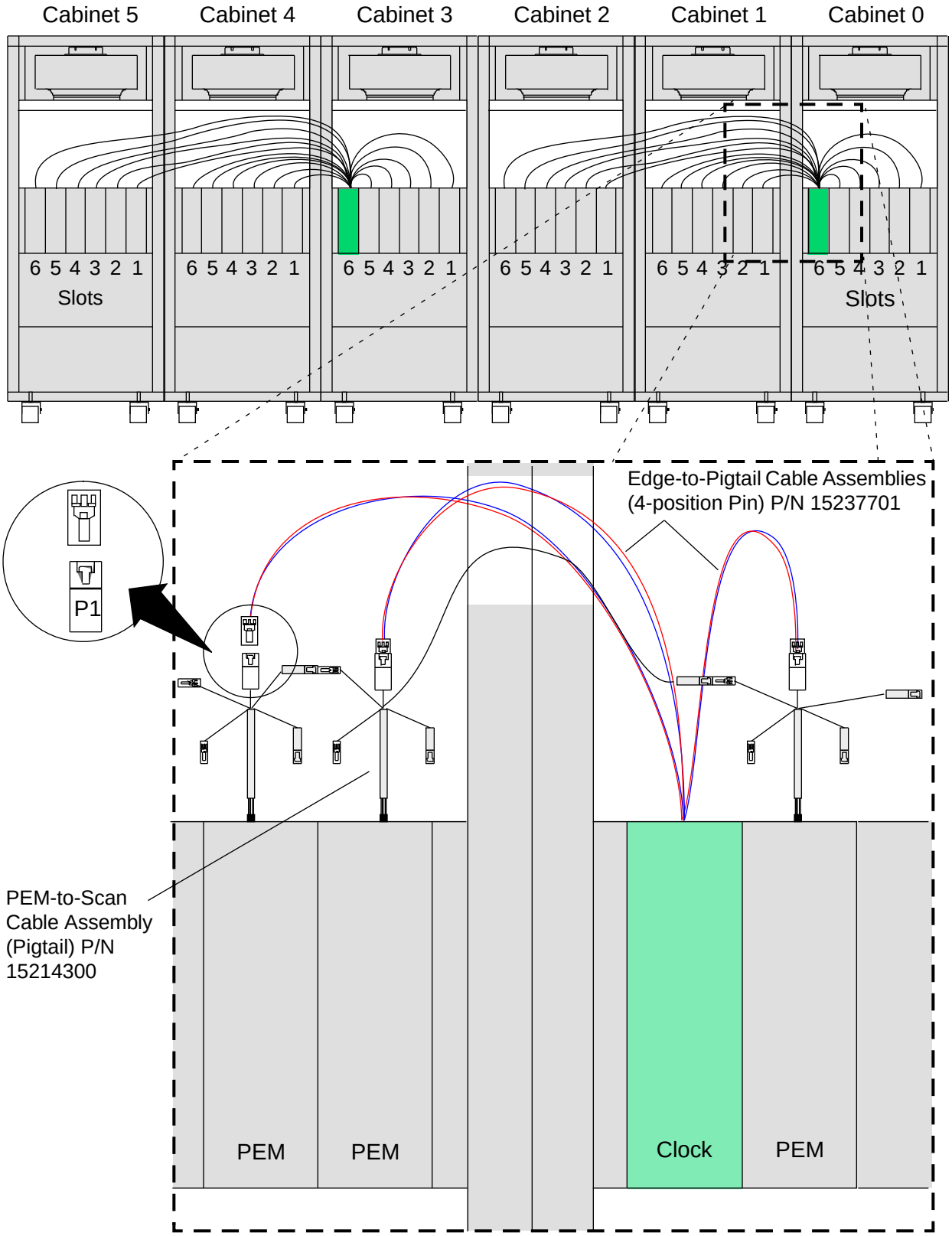

Procedure

Connect the 4-pin edge-to-pigtail cables (P/N 15237701) using this procedure:

1. Select a disconnected cable and refer to its labels to determine where you should connect it. If the cable is not labelled on both ends, refer to the Engineering upgrade specification for source/destination information, then label both ends of the cable. Label the 2-pin connectors with the cabinet, slot, and pin locations. Label the wiremat connector with the cabinet and slot locations. Figure 128 shows the cable.

Figure 128. 4-pin Edge-to-Pigtail Cable – P/N 15237701

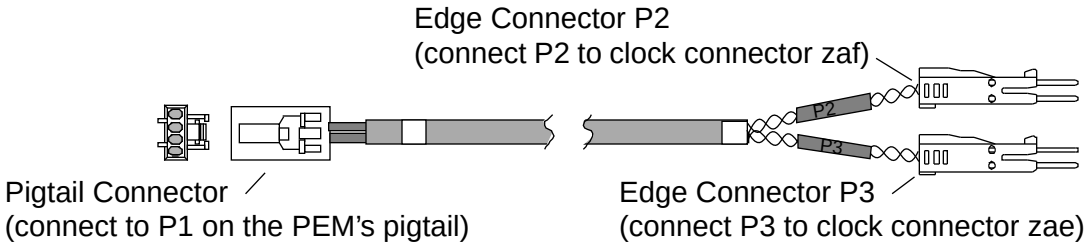

2. Route the cable between the top PEM rail and the top rail of the appropriate clock module.

3. Ensure that the cable is connected to connector P1 on the PEM's *pigtail* (P/N 15214300) as shown in Figure 127 on the previous page.

CAUTION
Handle the boundary scan wires carefully. They are fragile and can be damaged by excessive force or strain.

4. Using the technique you used to connect clock wires, connect the cable's 2-pin connectors to the top clock rail. Refer to the wire labels to determine where you should connect each 2-pin connector. (One 2-pin connector plugs into clock connector zaf, and the other 2-pin connector plugs into connector zae as shown in Figure 128.)

5. Check off the connections on the Engineering upgrade specification. The specification lists both direct connections, which look similar to this:

```
006-zaf42 15237701, P2  003-zah52   15214300, red   1-68 TCK FO > TCKM
006-zae53       , P3    003-zah51          , blue    1-34 TMS FO > TBSMb
```

6. Repeat the procedure for each PEM that you receive in the upgrade.

Reconnect Cable 15237601 (TDOF[0] < TDOM)

Complete this procedure if you add PEMs to cabinet 0, 1, or 2. The procedure for connecting the cables is on page 195.

Background

The PEMs in cabinets 0, 1, and 2 are all on a single daisy chain. The last PEM in this daisy chain connects back to the scan master PEM (in slot 1 of cabinet 0) via a 2-position socket, edge-to-pigtail cable assembly (P/N 15237601). Cable 15237601 carries TDOF[0] < TDOM signals. When you add PEMs, you must reconnect cable 15237601 to the last PEM in the upgraded system.

Figure 129. Reconnecting Cable 15237601 – Systems with 1, 2, or 3 Cabinets

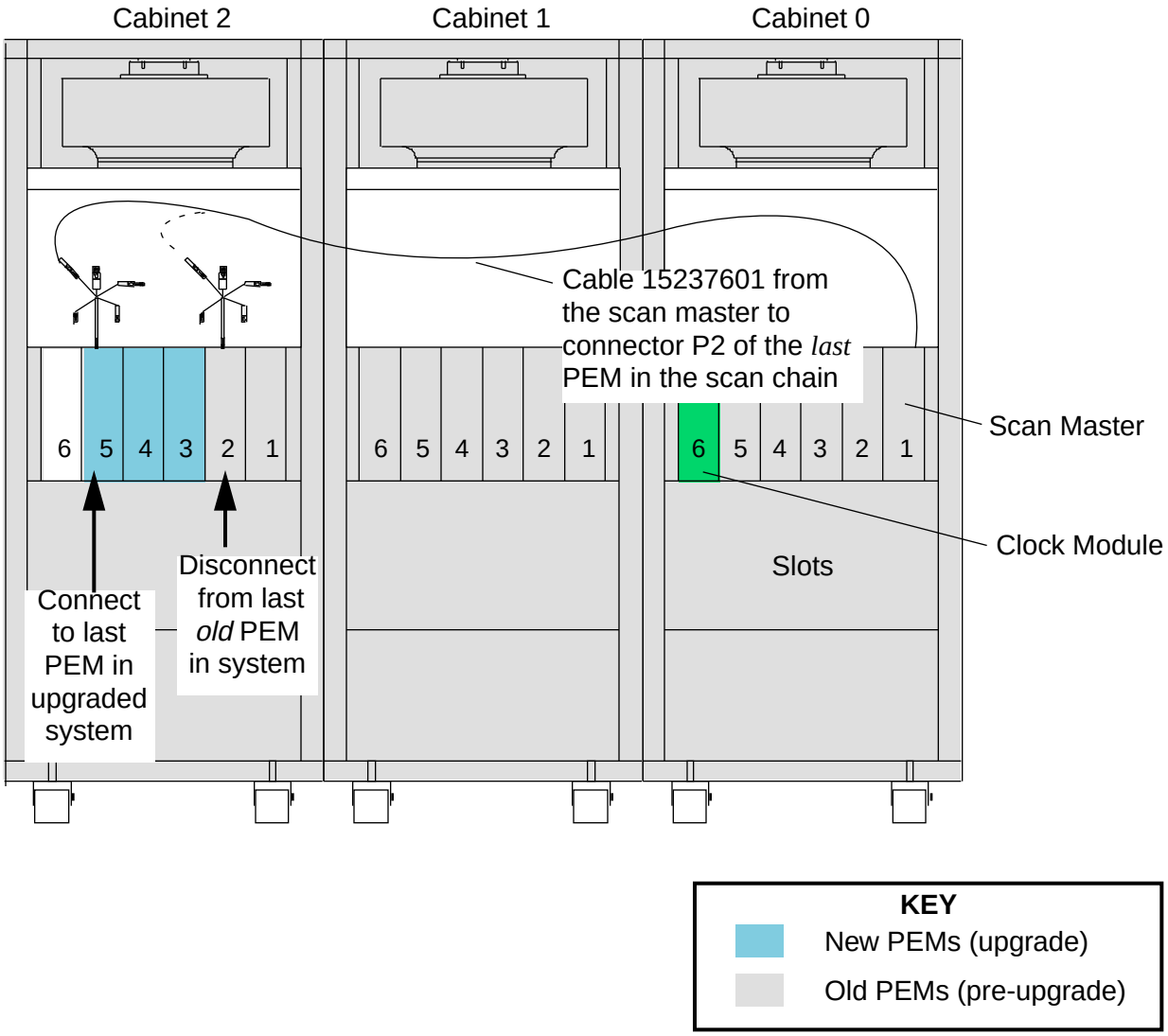

Procedure

Complete the following procedure if you add PEMs to cabinet 0, 1, or 2:

1. Disconnect cable 15237601 from connector P2 (marked black) on the pigtail of the last *old* PEM in the system. Refer again to Figure 129.

2. Relabel the wiremat end of the cable.

3. Connect cable 15237601 to connector P2 (marked black) of the last *new* PEM in the upgraded system.

   Example: If you upgrade a system from 13 PEMs to 16 PEMs, then you will disconnect the feedback wire from the 13th PEM and connect it to the 16th PEM as shown in Figure 129.

CAUTION
Handle the boundary scan wires carefully. They are fragile and can be damaged by excessive force or strain.

4. Secure the cable in the wirerack.

5. Check off the *dis*connection and the connection on the Engineering upgrade specification. The information looks similar to this on the specification:

   Disconnect

   001-zai43 15237601 *002*-zah54 15214300 , black TDOF[0] < TDOM

   Connect
   ....
   ....
   001-zai43 15237601 *003*-zah54 , black TDOF[0] < TDOM

Figure 130. 2-position Socket, Edge-to-Pigtail Cable – P/N 15237601

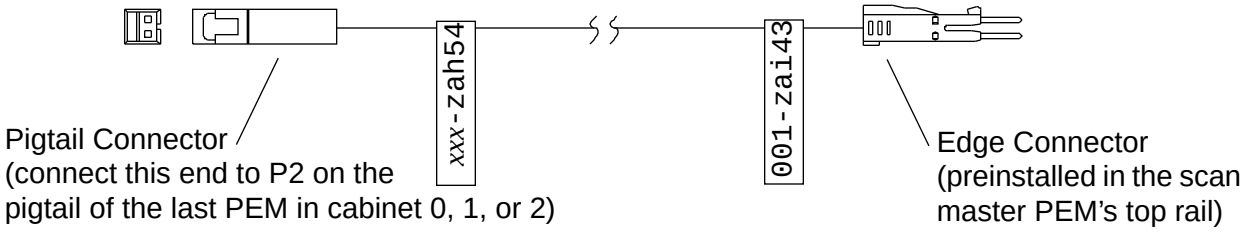

Reconnect the Jumper Wire (REPEATI < TDOM)

Complete this procedure if you add PEMs to cabinet 3, 4, or 5. The procedure for connecting the jumper wire is on page 197.

Background

The last PEM in the system (highest-numbered PEM) connects to PEM 17 via a jumper wire (scan jumper intermediate connection – P/N 15223802). The jumper wire carries REPEATI < TDOM signals. PEM 17 is in slot 1 of the fourth cabinet (i.e., slot 301).

Figure 131. Reconnecting the Jumper Wire – Systems with 4 or More Cabinets

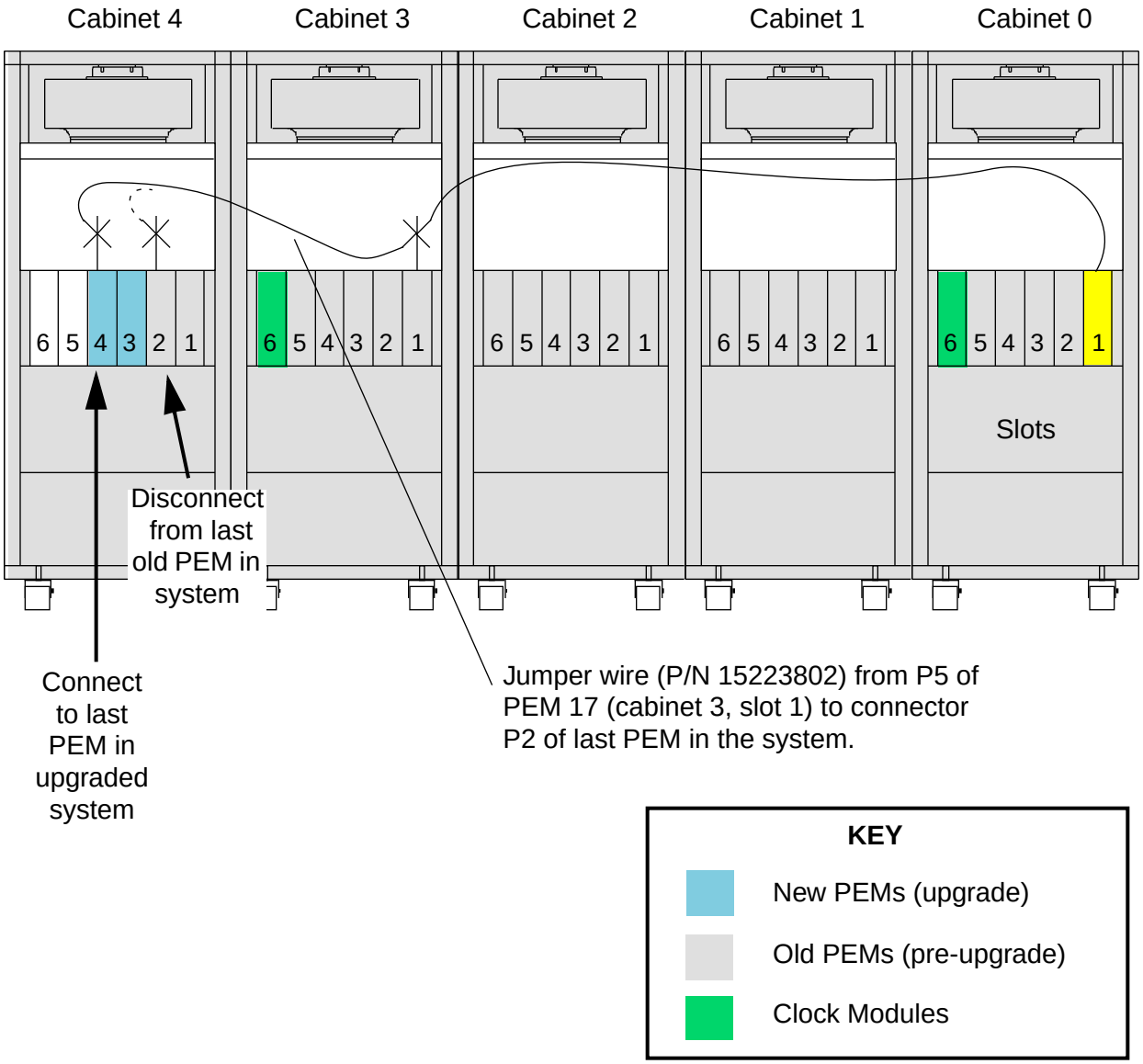

Procedure

Complete the following procedure if you add PEMs to cabinet 3, 4, or 5:

1. Disconnect the jumper wire (P/N 15223802) from connector P2 (marked black) on the pigtail of the last *old* PEM in the system. Refer again to Figure 131.

CAUTION
Handle the boundary scan wires carefully. They are fragile and can be damaged by excessive force or strain.

2. Connect the jumper wire to connector P2 (marked black) of the last *new* PEM in the system.

   Example: If you upgrade a system from 24 PEMs to 26 PEMs, then you will disconnect the feedback wire from the 24th PEM and connect it to the 26th PEM as shown in Figure 131.

3. Check off the *dis*connection and the connection on the Engineering upgrade specification. The information may look similar to this on the specification:

   Disconnect

   301-zah56 15214300, yellow 15223802 *302*-zah54 15214300 , black REPEATI < TDOM

   Connect
   ....
   ....
   301-zah56 15214300, yellow 15223802 *303*-zah54 , black REPEATI < TDOM
   ....

Figure 132. Scan Jumper/Intermediate Connection – P/N 15223802

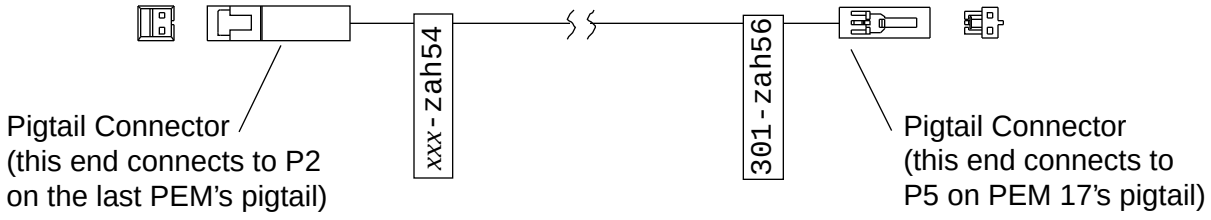

Connect New PEMs to the Daisy Chain (TDOM/TDIM)

Complete this procedure for all upgrades. The procedure is on page 199.

Background

The PEMs in cabinets 0, 1, and 2 are daisy chained and the PEMs in cabinets 3, 4, and 5 are daisy chained. The daisy chains are made between connector P2 of one PEM's pigtail and connector P3 of the next PEM's pigtail, as shown in Figure 133.

Figure 133. TDOM > TDIM Daisy Chain Connections

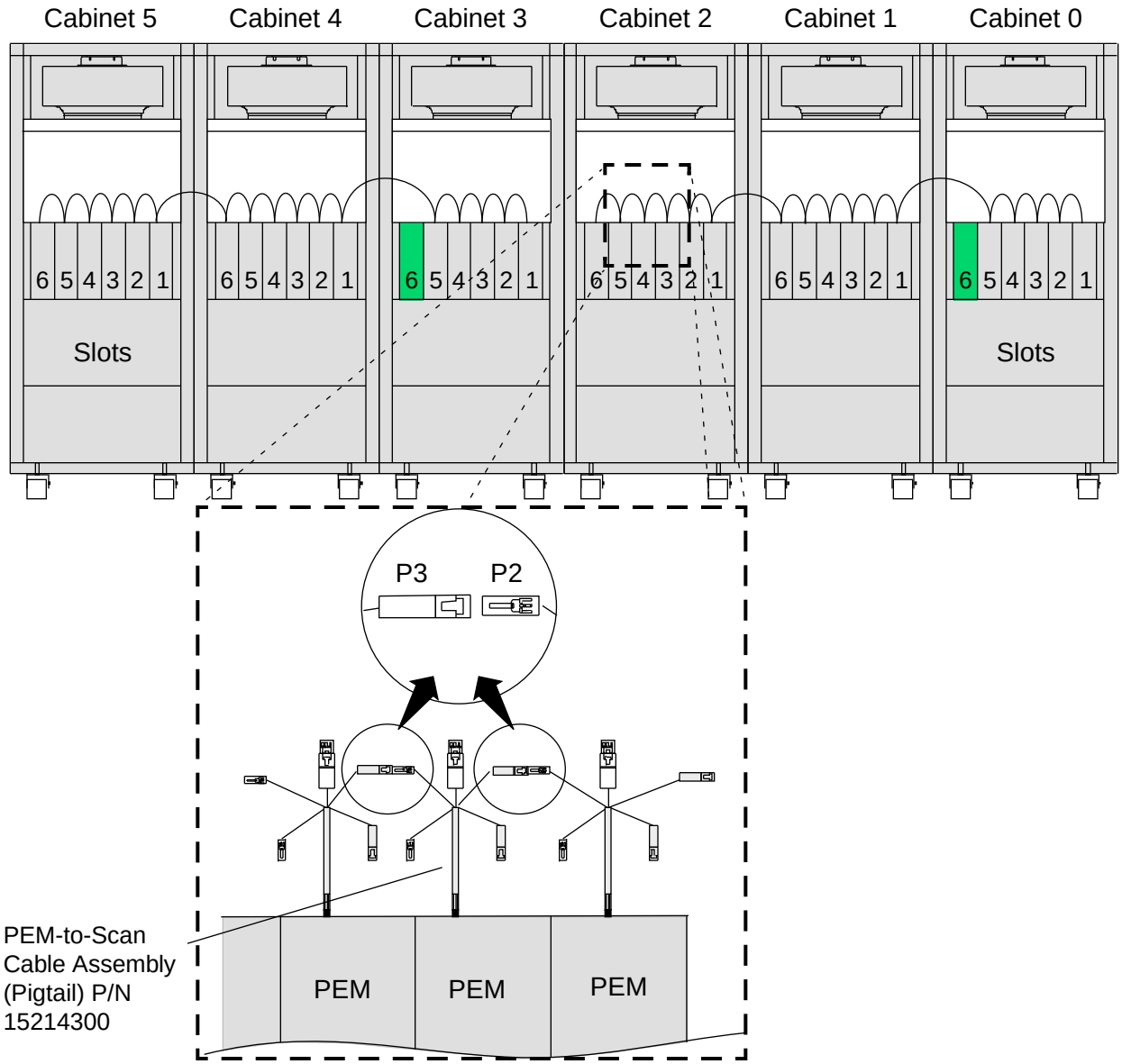

Procedure

Connect the daisy chain between PEMs:

1. Plug connector P2 (marked black) of the last *old* PEM in the system (you unplugged this connector in a previous procedure) into connector P3 (marked white) of the first *new* PEM (i.e. the PEM in the slot next to the last *old* PEM).

   Connectors P2 and P3 are located on the PEM-to-scan cable assemblies (pigtails) P/N 15214300.

CAUTION
Handle the boundary scan wires carefully. They are fragile and can be damaged by excessive force or strain.

2. If applicable, plug connector P2 of the *first* new PEM into connector P3 of the *second* new PEM (i.e. the PEM in the slot next to the *first* new PEM).

3. Continue the daisy chain process for each new PEM in the system. In other words, plug connector P2 of one PEM to connector P3 of the next PEM until you reach the last PEM in the system.

4. Check off the connections on the Engineering upgrade specification. On the specification, the connections look similar to this:

```
....
....
002-zah54 15214300, black     003-zah53     , white    TDOM > TDIM

....
....
003-zah54 15214300, black     004-zah53     , white    TDOM > TDIM
```

Reinstall the Connectors in the Top Clock Rail

Complete the following steps to reinstall the clock rail connectors after wire insertion.

1. Insert plastic pin locks (P/N 01775900) in any connector blocks that do not contain them and ensure that the pins are straight.

   a. Position the pin lock on the connector. Place the rough side toward the pins and the smooth side toward the module.

   b. Use a dental tool to fully insert the pin lock in the connector. Press the curve of the dental tool against the center of the pin lock, between the 2 sets of pins. Then gently slide the dental tool back and forth as you push the pin lock into position. Refer to Figure 134.

   c. Ensure that the pins are straight. (If necessary, use a 0.3-mm mechanical pencil to straighten a misaligned pin. Slip the tip of the pencil over the pin and gently bend the pin into the proper position.)

Figure 134. Inserting and Seating a Plastic Connector Pin Lock

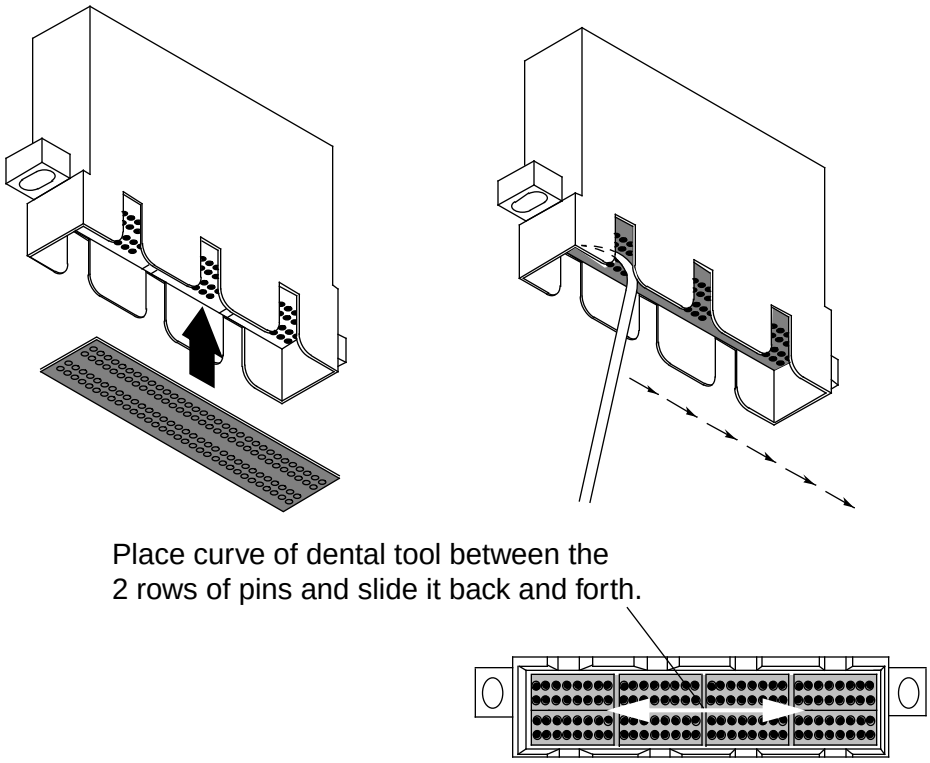

2. Install each connector in the top clock rail. Start with connector zah, which is close to the power supplies, then work your way to connector zae.

   a. Carefully insert the connector in the rail. Ensure that the connector is properly oriented and that the wires are not tangled with the spring (if installed).

   b. Insert the farthest hex screw (the hex screw that is closer to the power supplies). Do not tighten the screw.

   c. Repeat Step a and Step b for all of the connectors that you removed earlier, then install the last hex screw and brass spacer in connector zae.

   d. Tighten all of the hex screws to 15 in-oz.

3. If you removed them earlier, install the connector springs and center them in relation to the connector blocks.

4. Push each connector toward its spring to ensure that the connector moves laterally, then springs back into position.

5. Insert the foam plugs in the connector slots.

6. Use tie wraps to secure the wires in the wiremat.

Connect the PEM-to-WACS Cables

1. Locate the hardware necessary to install the PEM-to-WACS cables. It may be pre-installed in the cabinet, it may be attached to the PEM-to-WACS cable, or it may be in a plastic bag in a shipping container.

2. Plug each 25-pin WACS cable into the associated connector on the interconnect/control bulkhead that is located above the modules, as shown in Figure 135.

   NOTE: Do not connect a PEM-to-WACS cable to the connector on the far-left side of the bulkhead (as viewed from the module end of the cabinet). This connector is not used.

3. Use a 5-mm hex (allen) wrench to secure the WACS connector.

Figure 135. PEM-to-WACS Connections

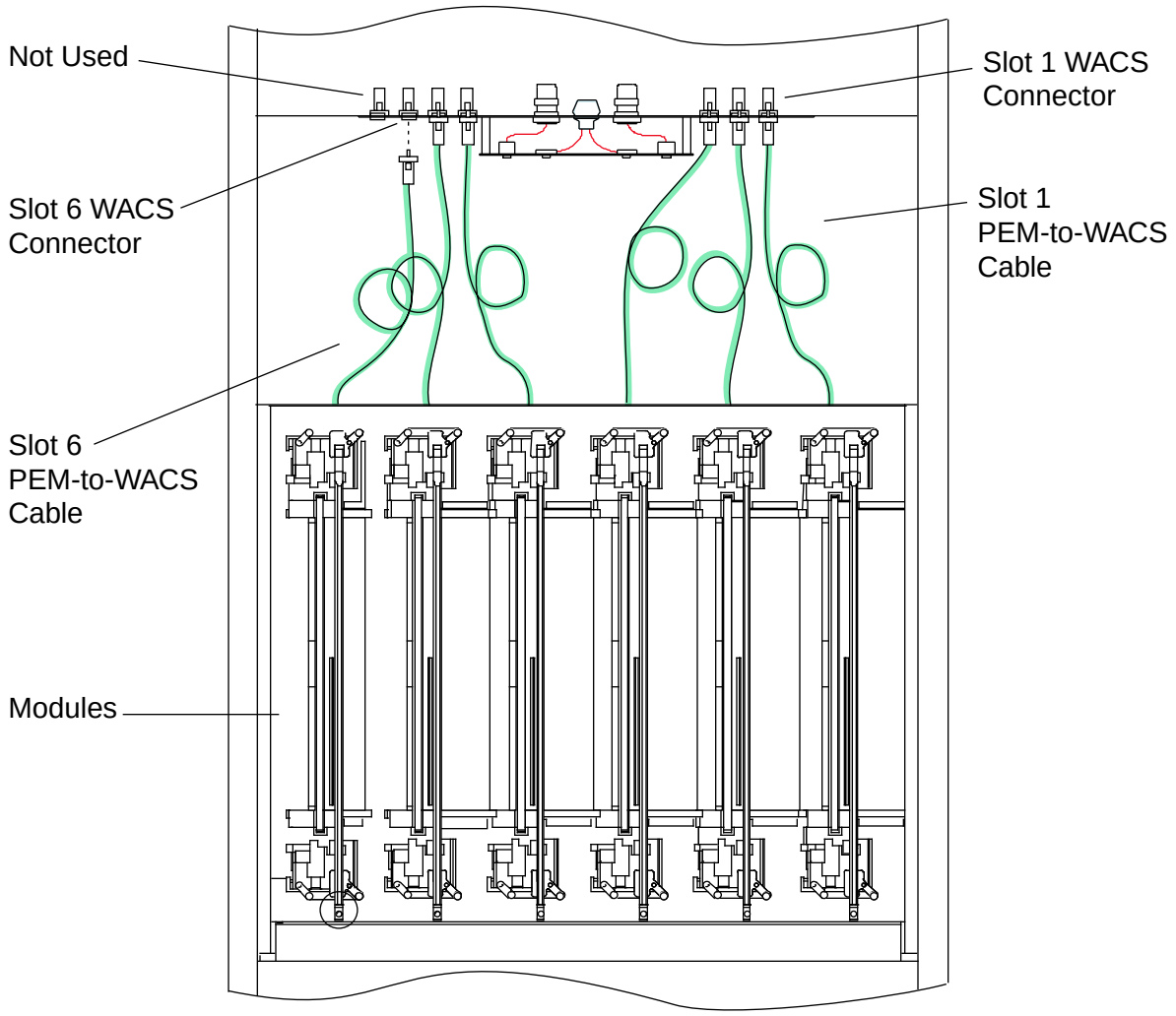

Rewire the Torus

When you add PEMs, you must rewire the torus for the new configuration. The procedure begins on page 205.

Background

Figure 136 is a simplified example of torus connections. It shows how both ribbon cables from one torus cable assembly connect to both ribbon cables from another assembly. The two ribbon cables on a cable assembly always connect to a single cable assembly.

Figure 136. Sample Torus Connections

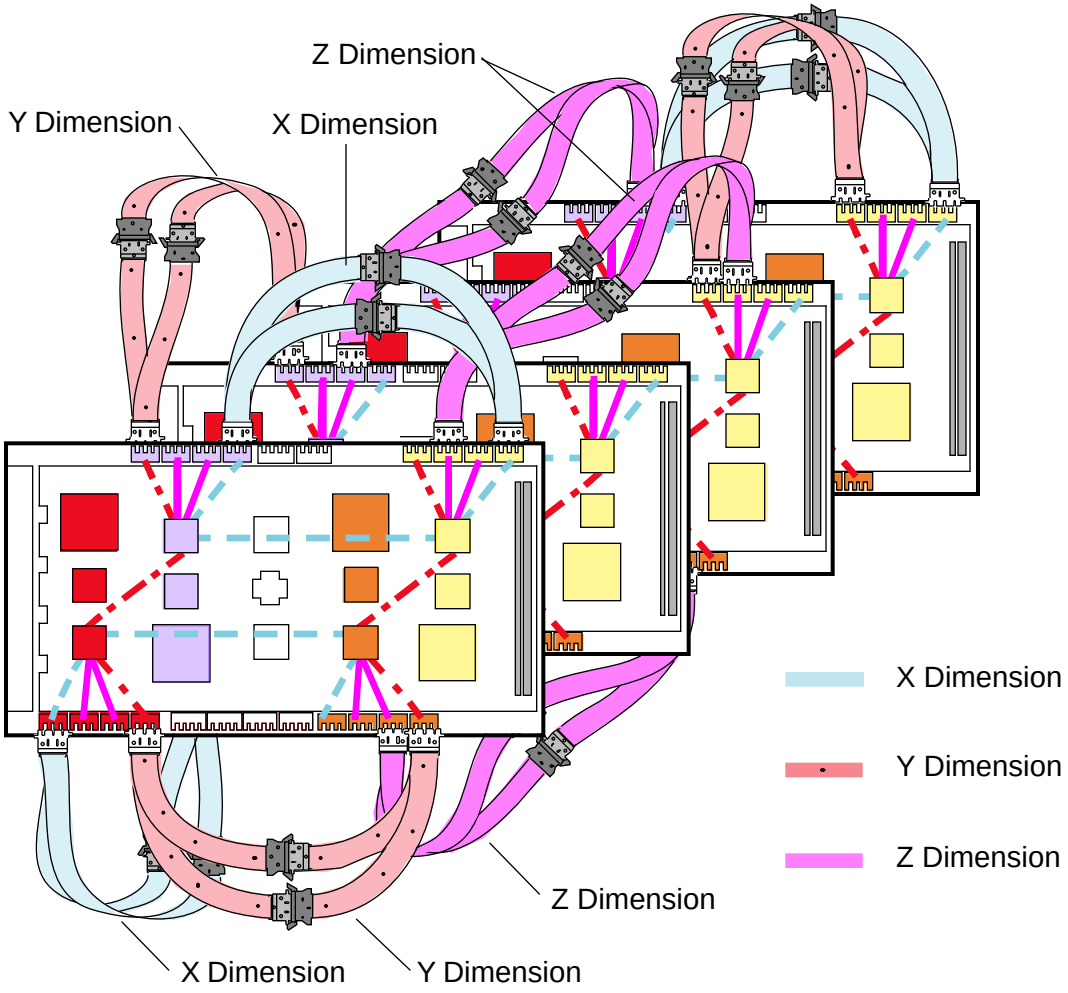

NOTE: For clarity, this figure shows fewer than half of the total torus connections and does not

Two locking levers hold each connector pair together. To connect a torus connection: align the alignment pins with the alignment grooves in the connector pair, then push the two connectors together until the locking levers snap into place, as shown in Figure 137.

NOTE: It is possible to connect the torus cables upside down despite the alignment grooves. Study the sides of the connectors to determine the subtle differences that will help you identify the pin/groove side in those cases where you cannot see the pins/grooves easily.

Figure 137. Connectors P2 and P3 – Torus Cable Assembly

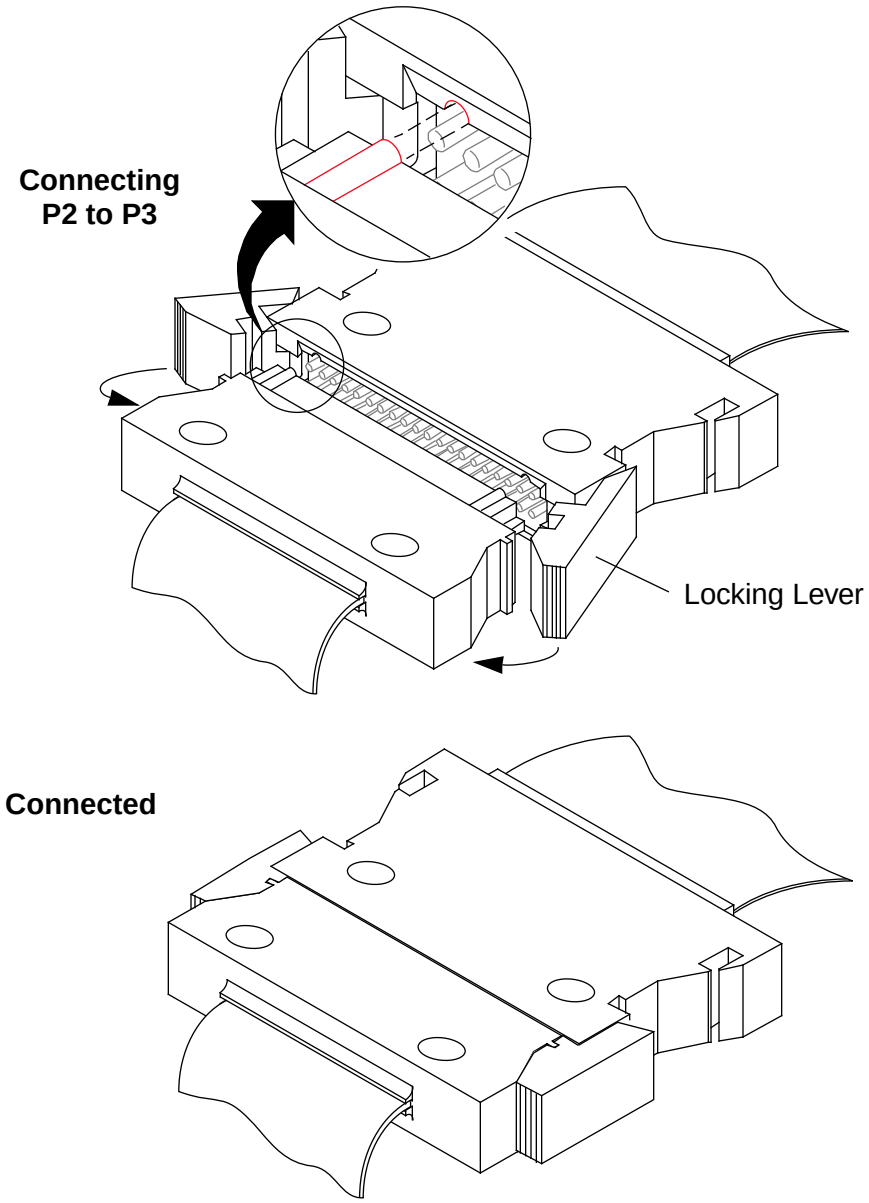

Procedure

1. Study the Torus information in the upgrade specification that was shipped with this upgrade. Appendix C contains a sample upgrade specification, and Figure 138 is an example of the Y-side torus section.

Figure 138. Example Upgrade Specification (PE8 to PE12) – Y-side Only

6.1 TORUS

Disconnect

< 0-01-yab	0-02-yab	15112905(x2)	Z dimension
< 0-01-yak	0-02-yak	15112905(x2)	Z dimension

Connect

< 0-01-yab	0-03-yac	15112905(x2)	Z dimension
< 0-01-yak	0-03-yal	15112905(x2)	Z dimension
< 0-02-yab	0-03-yab	15112905(x2)	Z dimension
< 0-02-yak	0-03-yak	15112905(x2)	Z dimension
< 0-03-yaa	0-03-yaj	15112904(x2)	X dimension

Connect the cable from connector yaa in cabinet 0, slot 3 to the cable from connector yaj in cabinet 0, slot 3.

15112904 = Cable part number
(x2) = Two cables

Example Only – The format of your upgrade specification may differ.

2. Take a moment to study the torus layout in the cabinet(s). Try to determine an advantageous method to complete the connections. For example, it may be easier to complete connections that are close to the power supplies before you complete other connections.

   Likewise, it may be easier to complete connections that span two or three slots before you complete connections that span four or more slots.

NOTE: The disconnect/connect sequence presented in this document is for reference only. You may find it easier to make each new connection as soon as you disconnect the old connection.

3. Disconnect the Z-side torus cables as required to complete the upgrade. For each connection, complete the following tasks:

   a. Locate the cables and remove the tie wraps.

   b. Double check the upgrade specification to ensure that you disconnect the correct cables.

   c. Disconnect the cables. (Two locking levers hold each connector pair together. To disconnect a torus connection: rotate the levers to the side as shown in Figure 137 on page 204. Then pull the connectors apart.)

   d. Check off the *dis*connection on the upgrade specification.

4. Connect the Z-side torus cables as required to complete the installation. For each connection, complete the following tasks:

   a. Locate the cables (remove tie wraps if necessary).

   b. Route the cables from chassis to chassis if necessary (refer to the "TIP" below).

   c. Connect the cables (align the pins with the grooves in the connector pair, then push the two connectors together until the locking levers snap into place, as shown in Figure 137 on page 204).

   NOTE: It is possible to connect the torus cables upside down despite the alignment grooves. Study the sides of the connectors to determine the subtle differences that will help you identify the pin/groove side in those cases where you cannot see the pins/grooves easily.

   d. Double check the wire list to ensure that you connected the correct cables.

   e. Coil the cables and secure them with a tie wrap.

   f. Check-off the connection on the wire list.

   TIP: Here is a technique to help you pass the ribbon cables between cabinets. Slide the reference card (the rail connector insert that was included with this document) through the cable trough so that it overlaps the cable trough on both ends. Then, straighten out the ribbon cable that you will pass between cabinets. With one hand on the reference card, place the ribbon cable connector

on the card and slide the cable into the next cabinet. The reference card will serve as a guide plane to help prevent the cable from coiling inside the cable trough.

5. Disconnect the Y-side torus cables as required to complete the upgrade.
6. Connect the Y-side torus cables as required to complete the upgrade.
7. Remove any unused/cut tie wraps from the cabinet.
8. Ensure that you have not disturbed any internal connections.

Connect the PEM-to-bulkhead GigaRing Cables

1. If you did not do it earlier, open the I/O bulkhead so that it swings on its hinges. Three #1 Phillips screws secure the bulkhead on each side.

2. For each PEM slot that you upgraded, remove the associated connector covers from the bulkhead using a #1 Phillips screwdriver. (Each PEM slot has four associated bulkhead connections as shown in Figure 139.)

3. For each bottom rail that you added, remove the tie wraps from the four GigaRing cables that connect to the rail (locations yaf, yag, yah, and yai).

4. Locate the male (P/N 13265100) and female (P/N 13265000) jackpost screws. They may be attached to the GigaRing cables.

5. Connect each cable to the appropriate slot on the I/O bulkhead with the appropriate type of jackpost (refer to Table 16). The internal side of each connector slot on the I/O bulkhead is labelled with the corresponding PEM-to-bulkhead GigaRing connector as shown in Figure 139.

   NOTE: Some GigaRing cables connect to internal loopback boards.

6. Secure the cables to the wire rack with tie wraps, and ensure that they do not touch the air filter.

7. When you complete the cabling, secure the I/O bulkhead in the operating position. Three #1 Phillips screws secure the bulkhead on each side.

Figure 139. I/O Bulkhead – Connector Locations

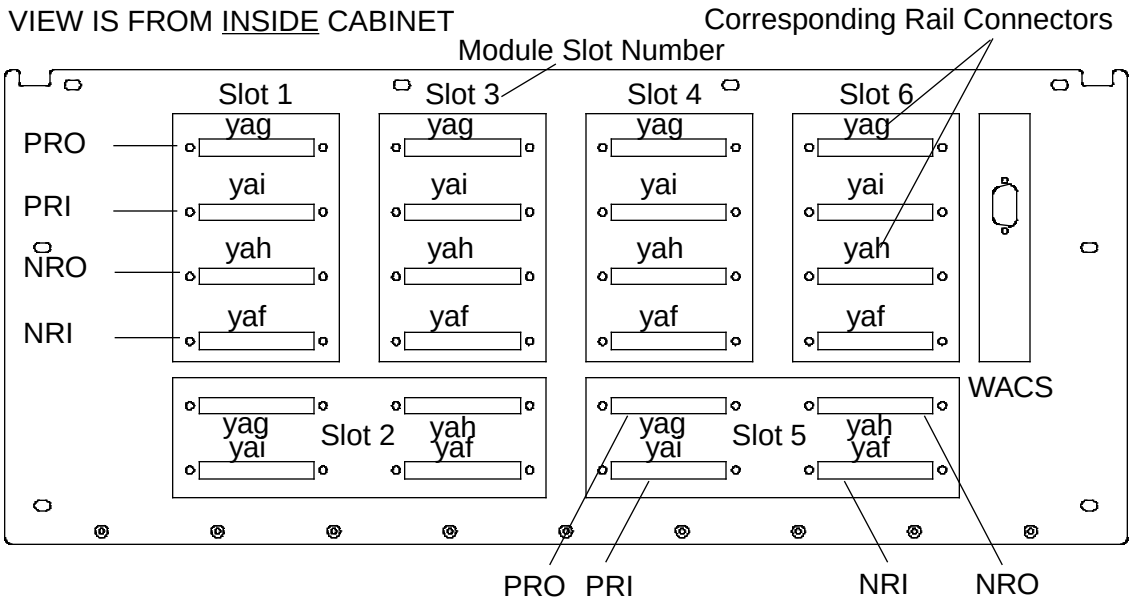

Connect the External GigaRing Cables

If applicable, refer to the system configuration documentation, which was shipped with your upgrade materials, for the new GigaRing configuration.

1. If applicable, reconfigure the support GigaRing channel. Use a 3-mm hex (allen) wrench to loosen and/or secure the GigaRing connections.

2. If applicable, reconfigure the customer I/O GigaRing channel(s) and/or connect additional channel(s) to the new PEMs via the I/O bulkhead.

Table 16 lists the GigaRing channels associated with each rail connector. It also lists the jackpost screw references for the bulkhead connector hardware.

Table 16. PEM-to-Bulkhead GigaRing Connections

Description	Rail Connector	Jackpost Screw Reference (on bulkhead)
Negative Ring In – NRI	yaf	Female
Positive Ring Out – PRO	yag	Male
Negative Ring Out – NRO	yah	Male
Positive Ring In – PRI	yai	Female

Close the Cable Ducts

1. Carefully close the cable ducts between the cabinets to restrict air leaks. Secure the retaining screws with a #1 Phillips screwdriver.

2. Use tie wraps to secure the wires and cables as needed; trim the tie wraps as appropriate.

Install the Modules and Power Supplies

When you complete the internal wiring, install the modules and power supplies using the following procedure:

1. Install each module:

	CAUTION
	Observe all ESD precautions. Failure to do so could result in damage to the equipment. Ensure that you do not touch any logic components with your skin, tools, or clothing.

   a. Ensure that the module contains a cam tool (or a plastic cam) in the correct slot in the bottom shuttle guide. This will prevent the shuttles from slipping down during the installation and causing damage.

   b. Position the module with the heat sink to your right, the connector blades toward the ground, and the handle toward your chest.

   c. Align the module assembly with the module rails, then insert the module partially into the rails with even pressure.

   d. When the module handle is near the top mechanical interlock, rotate the interlock until the slot aligns with the power supply handle.

   e. Insert the handle partially into the top mechanical interlock, then release the top interlock and rotate the bottom interlock until the slot aligns with the module handle.

   f. Fully insert the module, then release the bottom interlock.

   g. Install the retaining screw (setscrew) in the bottom of the module handle and tighten it with a 3-mm hex (allen) wrench until the module is secured to the rail.

      The retaining screws help ensure that the modules are installed to a uniform depth in the card cage, and they help protect the modules and module connectors against damage from movement.

2. Carefully insert each new power supply in the power supply slot. When the power supply power blade contacts the power connectors on the module, the power supply rail should move slightly to ensure proper alignment.

   NOTE: Be careful not to force the insertion if the power blade and power connectors are out of alignment.

3. With each power supply installed, secure the front shoulder screws. Use the 4-mm hex (allen) wrench.

4. Remove the power supplies and secure the rear shoulder screws.

5. Reinstall the power supplies.

6. Connect the power cord (P/N 5717001) between the power supply and the receptacle on the circuit breaker box.

7. Connect the control connection to the power supply. The control connection is located on the WACS harness; it is coiled within the WACS box. Secure the connector screws with a flatblade screwdriver.

8. Cam the modules. Refer to Figure 140.

   If you feel resistance, remove the cam, remove the module, and check the rail connectors and pins. Then check the shuttle connectors on the module. Correct any problems, then install the module again. Ensure that it is fully seated, then try to cam it.

9. Insert plastic cams (shuttle connector locks – P/N 12919100) in the modules, if available.

   NOTE: If you do not have enough plastic cams and/or metal cams to insert them in the *top and bottom* cam guides of every module, then inset them in the *top* cam guides of every module. This will prevent the top shuttles from sliding down.

Figure 140. Module Camming

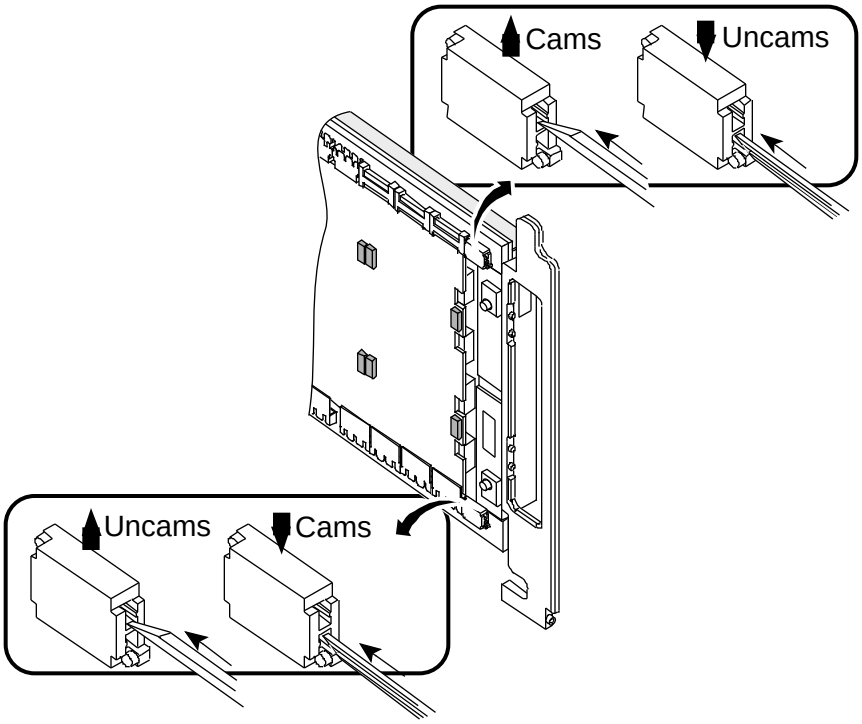

Check System Function

When you complete the mechanical installation procedures, check the system power and control functions, then check the module connections and function.

Power On the Cabinet

1. Ensure that you have removed all tools from the cabinets and that the cabinets are ready for power on.
2. Remove any locks and tags the you installed earlier.
3. Enable the customer circuit breaker(s) and/or plug in the cabinets.
4. Enable the main disconnect circuit breaker (CB1) on each of the CRAY T3E cabinets.
5. Enable the applicable secondary circuit breakers to supply power to all cabinet components, including the new modules and power supplies.

Check Module Power and Control

Complete the following tasks for each new module and power supply:

1. Verify that the green LEDs of each new power supply are on. Verify that no amber fault LEDs are illuminated on the power supplies.
2. At the WACS display, verify that the output of each new power supply is approximately -3.4 Vdc. (This value is subject to change.)
3. Press the Margin High portion of the Power Supply Margin switch. Check the WACS display to ensure that the voltage increased by approximately 0.1 Vdc.
4. Press the Margin Low (bottom) portion of the Power Supply Margin switch. Check the WACS display to ensure that the voltage decreased by approximately 0.1 Vdc below the normal settings.
5. Press the Normal (middle) portion of the Power Supply Margin switch to return the voltages to the normal settings.

Update the Configuration, Run Boundary Scan, and Run Diagnostics

After you complete the mechanical installation of the new CRAY T3E AC PEMs, update the configuration and run boundary scan and diagnostics.

NOTE: The specific tasks involved are subject to change. Always use the most up-to-date tests and procedures.

1. Ensure that all system connections are complete, including GigaRing, WACS, and Ethernet connections.

2. Ensure that the SWS is powered up.

3. Ensure that the nodes (MPN and SPN) are powered up.

   Firmware that resides in each node initiates power-up self-tests and broadcasts the IP address. The SWS then recognizes the nodes and downloads VxWorks onto the nodes.

4. Ensure that the MPNs and SPNs are checked out with appropriate tests.

5. Ensure that the CRAY T3E cabinets are powered up.

6. Check the following switch settings on the CRAY T3E AC cabinets:

   - Ensure that the margins are set to normal.
   - Ensure that the clocks are set to normal.
   - Ensure that the boundary scan hard enable switches are set to enable.

7. Log in at the SWS as `craydiag`.

   NOTE: You must log in as `craydiag` to change the t3e_config file.

8. Run the GigaRing channel-clearing utility for each GigaRing channel that connects to your system. For example:

   ```
   sws# /opt/CYRIsws/bin/ring_clear -l sn6505-mpn0
   ```

   Where `sn6505-mpn0` is the name of the MPN on the ring.

   NOTE: As noted in FN #2242a, use only the released version of the ring_clear command, which is located in /opt/CYRIsws/bin, if SWS-ION release 1.1 or higher is installed. (To determine the release, view /opt/CYRI_version/versions.) The virtual channel (VC) mask is incorrect for some variations of ring_clear commands. The VC mask on the send side is set to use specific paths, which may cause SCX DMA packet time-outs.

9. Bring up nwacs and set the CRAY T3E soft switches for boundary scan operation:

   a. Set the Soft Scan Enable switch (formerly the Testmode switch) to ON.

   b. Set the TCK Select (test clock select soft switch) to TCKS.

   c. Press the Write Switches button.

10. Start T3EMS. Figure 141 shows the T3EMS main window.

Figure 141. T3EMS Main Window

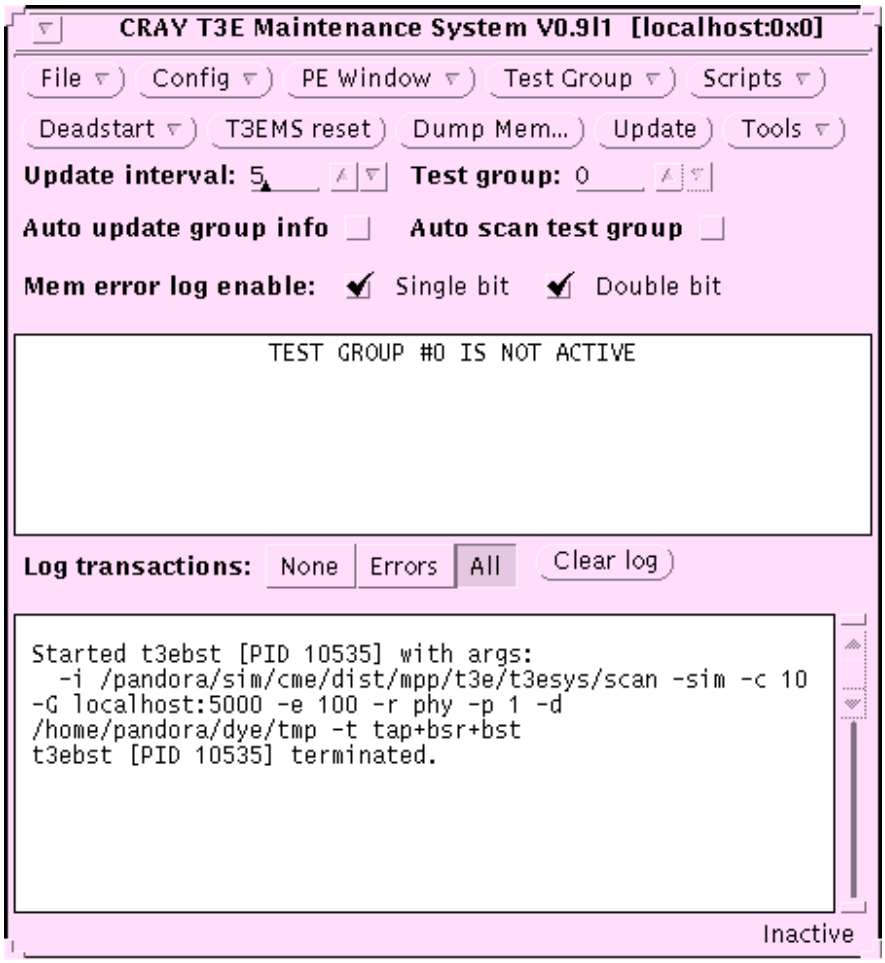

11. Update the number of PEs to reflect the new configuration:

    a. Open the T3EMS System Configuration window via the Config menu in the T3EMS main window.

    b. Update the number of PEs shown in the Nbr PEs: _____ portion of the System Configuration window. Refer to Figure 142. (Do not click Save now; you will save later.)

Figure 142. System Configuration Window

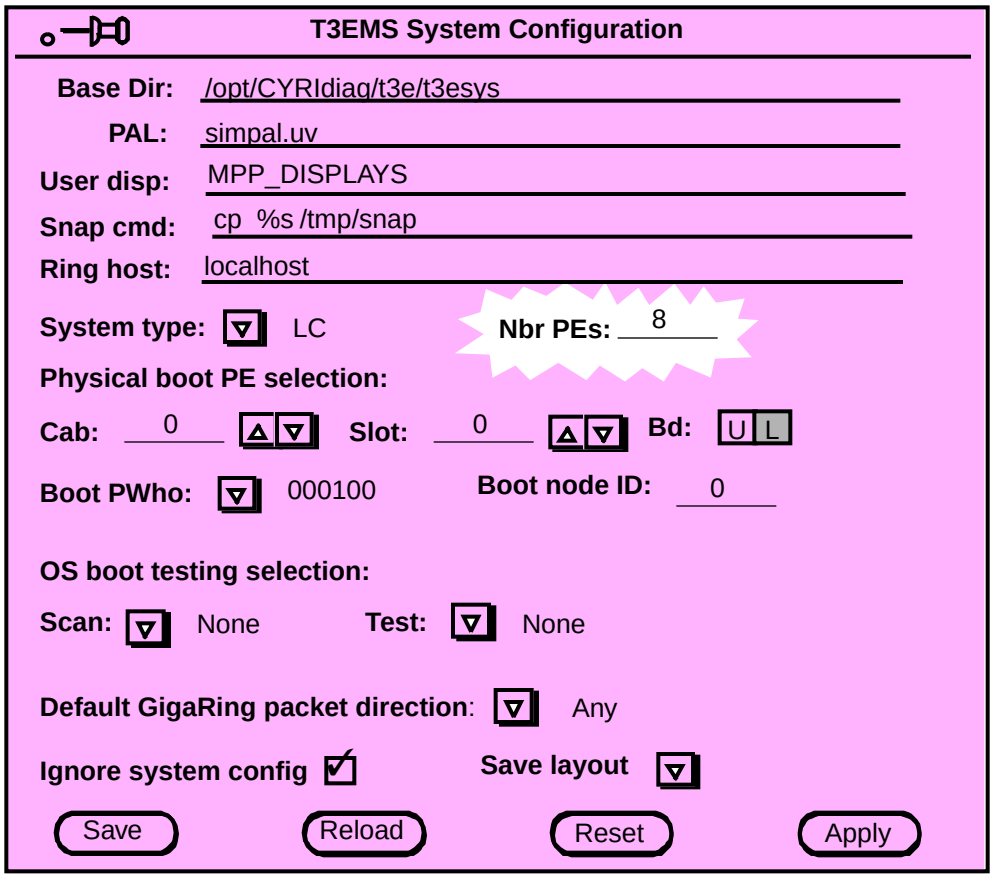

12. Disable the I/O ports on all PEs that do not connect to GigaRing channels:

    a. Open the T3EMS PE Configuration window via the Config menu in the T3EMS main window.

    b. In the bottom half of the PE Configuration window, use your left mouse button to select the PEs where you will disable the I/O ports.

    c. Click on the IO button to disable the I/O ports on the selected PEs. The letters IO appear on the right side of the selected PEs to signify that the I/O ports are disabled (as shown in Figure 143).

13. In the PE Configuration window, ensure that the memory configuration (Mem config) settings are correct for **all PEs**. Make any necessary corrections.

Figure 143. PE Configuration Window

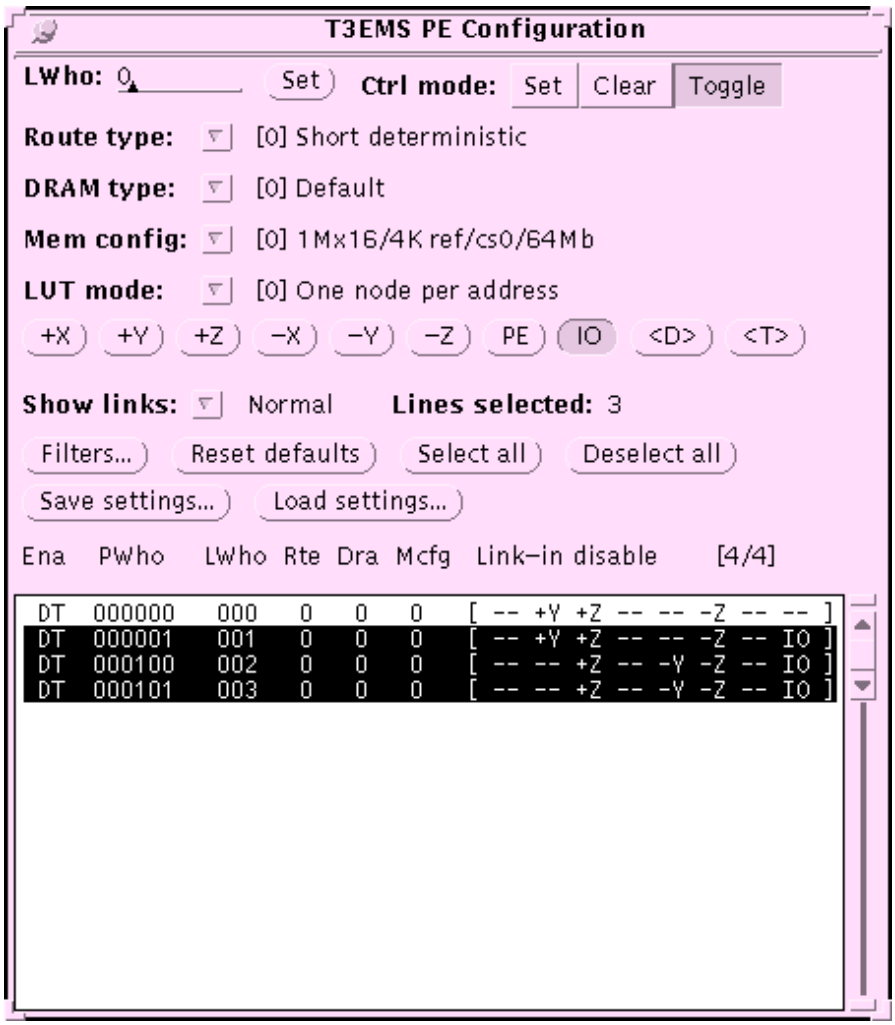

14. Save your changes by clicking on the Save button in the System Configuration window.

15. Run boundary scan:

    a. Under the Tools menu item in the T3EMS main window, select Boundary Scan.

    b. When the T3EMS Scan Tool Options window appears, click on the Start button to run boundary scan. Figure 144 shows the T3EMS Scan Tool Options window.

    NOTE: Boundary scan will generate new vectors for the added PEs.

    NOTE: Run boundary scan at normal voltages as noted in FN #2228.

16. Run Scan clear (t3etap) to reset the clock for normal operation. (Access the Scan clear selection via the Tools menu item in the T3EMS main window.)

17. If necessary, run the GigaRing channel-clearing utility (ring_clear) again.

Figure 144. T3EMS Scan Tool Options Window

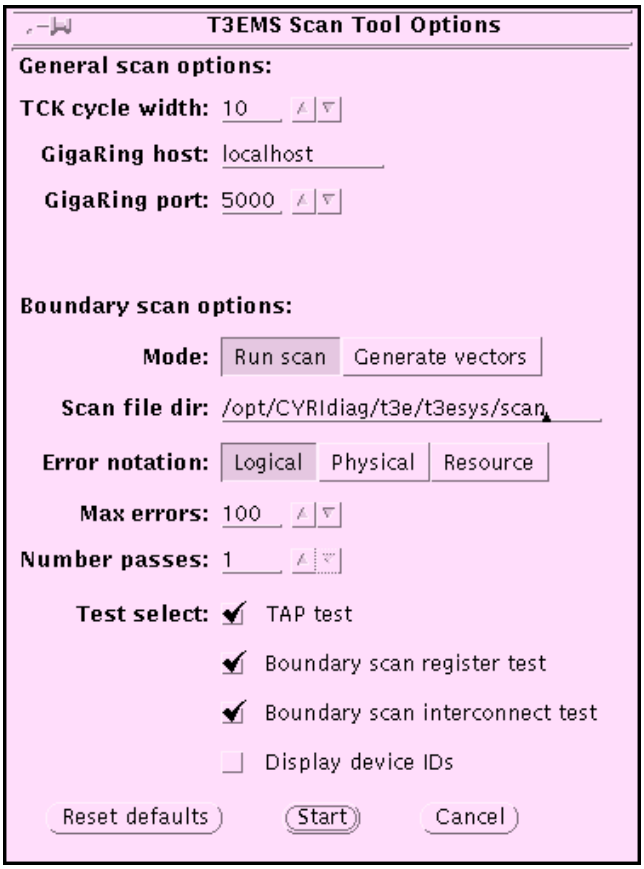

18. Under the Scripts menu item in the T3EMS main window, select Load & Run. The Load Program window appears, as shown in Figure 145.

19. Run the giga_diag.pgm diagnostic. (The giga_diag.pgm diagnostic offers a series of interactive windows that contain program choices. The following list contains a current set of program choices; base your choices on the status of the diagnostic when you run it and on any site-specific needs.)

    a. Select the giga_diag.pgm diagnostic from the Load Program window and click on the Accept button.

    b. When the Section Selects window appears, click on the Done button.

    c. When the SCX Node Select window appears, ensure that the correct target node ID(s) are entered, then click on Done.

    d. When the Target Router Selects window appears, click on Done.

    e. When the Number Of Passes To Run window appears, change the pass count to 1 and click on Done. The diagnostic will then run.

    f. When the diagnostic completes, proceed to the next step.

Figure 145. Load Program Window

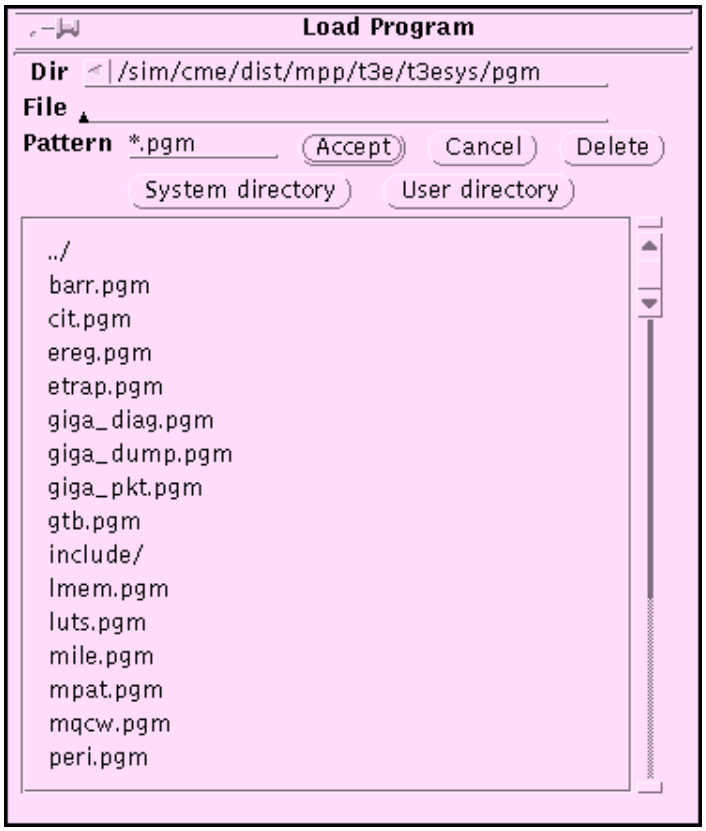

20. Run the mile.pgm command buffer. (This starts the offline diagnostic suite listed in Table 17. This diagnostic offers a series of interactive windows that contain program choices. The following list contains a current set of program choices; base your choices on the version of the diagnostic and on any installation-specific needs.)

    NOTE: The mile.pgm command buffer performs deadstart functions, which clear memory and load PAL (Privileged Architecture Language) code.

    a. Select the mile.pgm command buffer from the Load Program window and click on the Accept button.

    b. The first window provides a choice about which test to begin with. Click on the Done button to start the diagnostic suite with the todt test.

    c. The next window enables you to choose which tests run. Click on Done; you will run all of the tests.

    NOTE: For cit to run under mile.pgm, the rings must be initialized and the IO ports on all PEs -- except for the PEs on modules that connect to GigaRing channels -- must be disabled.

    d. The next window enables you to choose whether the program will log single-bit errors (SBEs) or stop when it detects an SBE. Select the button that logs SBEs, then click on Done.

    e. The next window enables you to choose whether to dump the SBE information to a file. Select Yes, then click on Done.

    f. The next window enables you to choose whether the suite will run once or continuously. Select Single, then click on Done.

    g. The next window enables you to choose the margins (clock speed and power margin). Select Normal/Normal, then click on Done.

       The diagnostic suite will run now.

    h. When the diagnostics complete, close the Load Program window and proceed to the next step.

Table 17. Offline Diagnostic Tests

Test	Pass Count
The following test runs alone under the *T3EMS scripts:*	
giga_diag	1
The following tests run under the *mile.pgm* command buffer:	
todt (time_of_day_test)	1,000
ereg (E-register local test)	40
barr (barrier/eureka)	50
lmem (local memory test) Preset the config file for correct memory size	1
peri (PE random instruction test)	2,000
rchip (basic router test)	10
xnet (network test)	50
luts (look-up table)	5
mqcw (message test)	3,000
gtb (global translation test)	4
segt (segment translation test)	5
etrap (error trap test)	100
pst (processor stall test)	20
rmem (remote memory test)	1
rlo	2,000
cit	5

Install Panels and Doors

When you confirm that the system is fully functional and ready for customer operation, replace the access panels and doors that you removed earlier.

Install Rear Access Panels

Install the rear access panels that you removed earlier. Figure 146 shows the various panels on the rear of the cabinet.

1. Install the upper and lower plenum panels on each cabinet.
2. Install the module panels and I/O panels on each cabinet.
3. Install the blower exhaust shield on each cabinet and connect the clock switch connectors.

Figure 146. Access Panel Locations

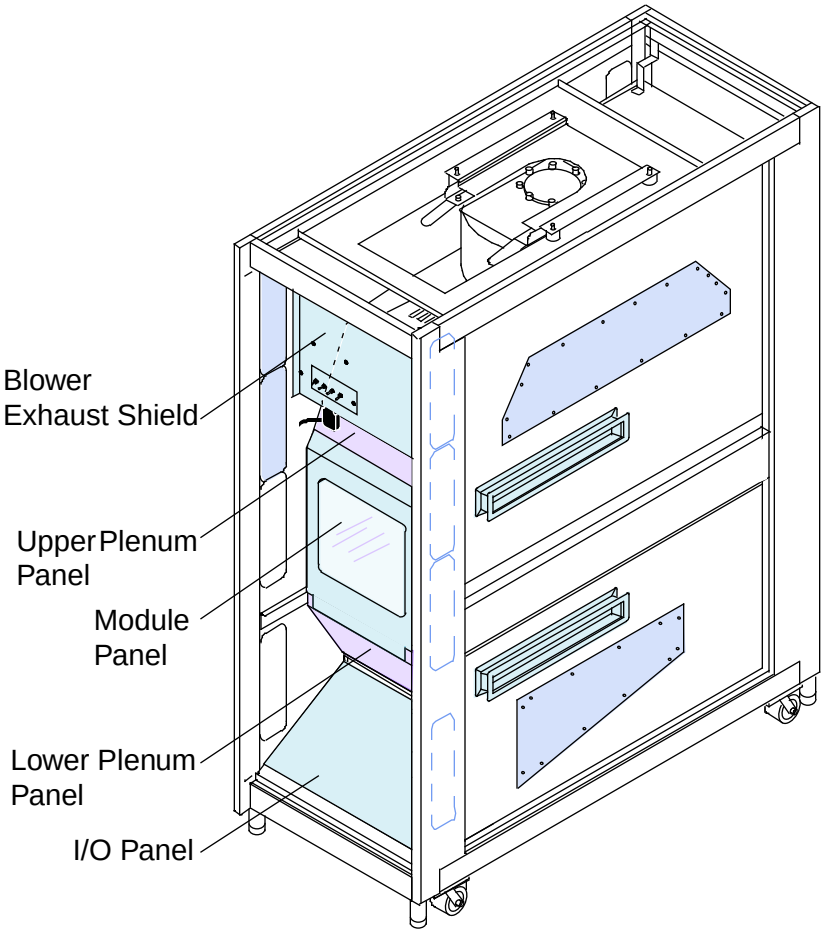

Install the Doors

Replace each cabinet door that you removed earlier using the following procedure. The procedure may require two people.

1. Ensure that all washers are in place on the hinges, then carefully position the door's hinge hardware directly above the frame hinge pins.
2. Carefully lower the door onto the frame hinge pins. (You may need to flex the door slightly to align the hardware.)
3. Ensure that the door opens and closes properly.
4. Connect the ground wire.

Conclusion (Operating System Changes)

This completes the slot hardware upgrade procedures for air-cooled systems.

You must now complete the software portions of the upgrade. Refer to the *UNICOS/mk Configuration Reference Manual*, SG-2603, for details.

Appendixes

"MAIN TABLE OF CONTENTS'

Contents: Appendixes

Appendix A – Wire Removal 225
Appendix B – Removing Original Cabinets 228
Removing a 1-, 2-, or 3-cabinet System as a Single Unit 228
Disconnecting One or More Cabinets from Other CRAY T3E Cabinets 230
Appendix C – Example Upgrade Specification 232

Appendix A – Wire Removal

Use the following procedure to remove a 2-pin connector (clock or boundary scan wire) from a rail connector:

1. Position yourself so that you can see the pins.
2. Identify the pin location of the wire that you must remove.
3. Carefully slide the hollow tip of a 0.3-mm mechanical pencil over the *outermost* pin of the pin pair. Then apply a gentle force both toward the other pin in the pin pair and toward the wire, away from the module area and toward the base of the rail. Refer to Figure 147.
4. Return to the wiremat and pull the defective clock wire from the rail.

Figure 147. Connector Removal with Mechanical Pencil

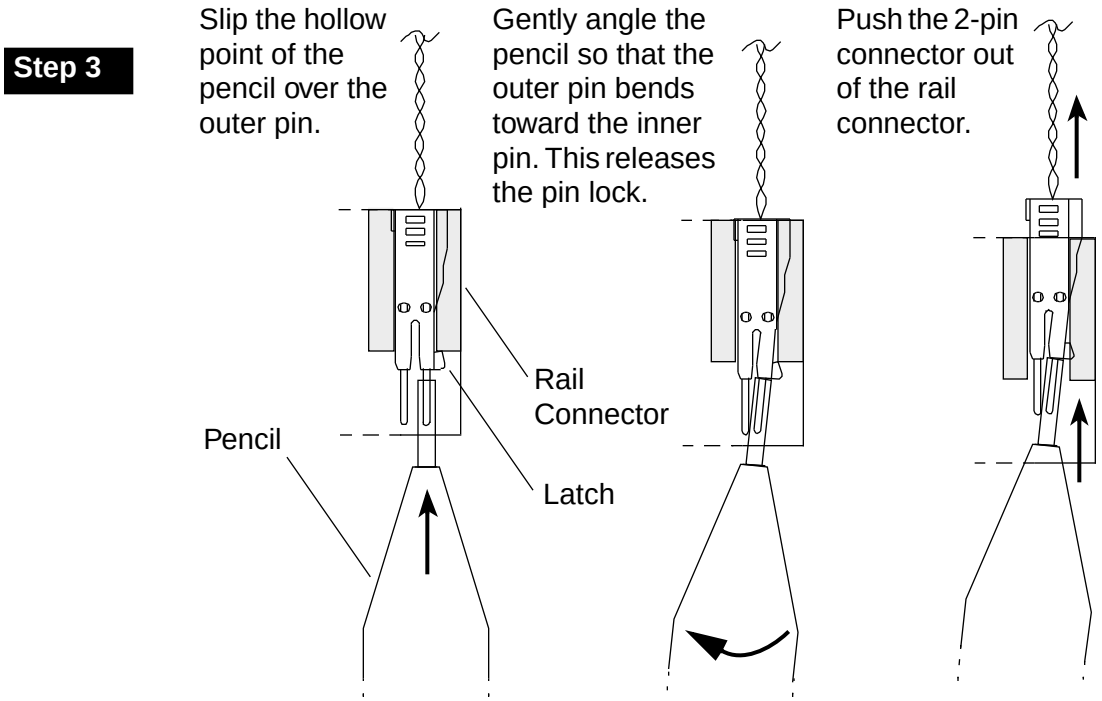

Appendix B – Removing Original Cabinets

In some cases, your upgrade may require the removal of one or more original CRAY T3E AC cabinets, which you replace with new cabinets. The following procedures outline the basic steps for removing the original cabinet(s). After you remove the original cabinet(s), install the replacement cabinet(s) according to the procedures in this document or in one of the following documents, whichever is applicable:

- *CRAY T3E Air-cooled (AC) System: Single-cabinet Installation*, HMM-164
- *CRAY T3E AC System: Multiple-cabinet Mechanical Installation Guide*, HMM-369

Removing a 1-, 2-, or 3-cabinet System as a Single Unit

Refer to the following procedure if you are removing a 1-, 2-, or 3-cabinet system as a single unit. In other words, refer to this procedure when you do not need to disconnect any intercabinet wires.

NOTE: The following procedure is an outline only; deviate from the outline as needed. Refer elsewhere for the appropriate details required to perform each task.

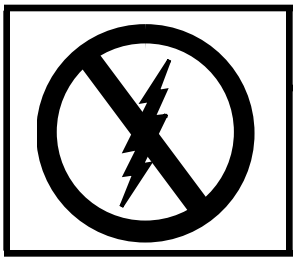

CAUTION

Observe all ESD precautions. Failure to do so could result in damage to the equipment.

1. Make a copy of the operating system, if desired.
2. Bring down the operating system and remove power from the cabinet(s).

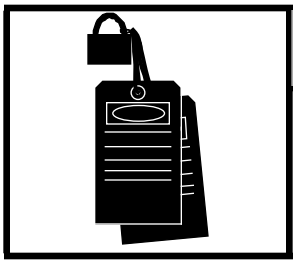

WARNING

Ensure that the circuit breakers for the equipment being serviced are off, locked, and tagged. Failure to do so could result in severe shock and burns.

3. Unplug the power cord from each CRAY T3E cabinet, remove the power cord cover plate from the power box area, and position the power cord and cover plate within the cabinet.

4. Label the GigaRing and WACS connections to each CRAY T3E cabinet, then disconnect them.

5. If applicable, label the remote alarm connections to each CRAY T3E cabinet, then disconnect them.

6. If needed for your new cabinet(s), remove the side panels from the original CRAY T3E cabinet(s).

7. If needed for your new cabinet(s), remove power supplies from the original CRAY T3E cabinet(s).

8. If needed for your new cabinet(s), remove modules from the original CRAY T3E cabinet(s).

9. Pack the cabinet(s) for shipment; reverse the unpacking procedures in this document, with any necessary deviations.

Disconnecting One or More Cabinets from Other CRAY T3E Cabinets

Refer to the following procedure if you must disconnect one or more CRAY T3E cabinets from other CRAY T3E cabinets. In other words, refer to this procedure if you must disconnect intercabinet wires.

NOTE: The following procedure is an outline only; deviate from the outline as needed. Refer elsewhere for the appropriate details required to perform each task.

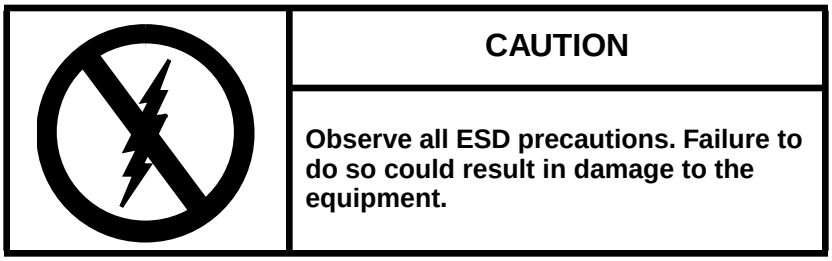

1. Make a copy of the operating system, if desired.

2. Bring down the operating system and remove power from the CRAY T3E cabinets.

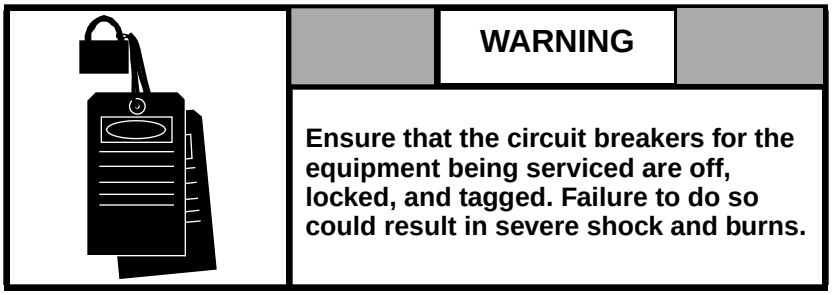

3. Unplug the power cord from each CRAY T3E cabinet that you will remove, remove the power cord cover plate from the power box area, and position the power cord and cover plate within the cabinet.

4. Label the GigaRing and WACS connections to each CRAY T3E cabinet that you will remove, then disconnect them.

5. If applicable, label the remote alarm connections to each CRAY T3E cabinet that you will remove, then disconnect them.

6. If needed for your new cabinet(s), remove the side panel from the last original CRAY T3E cabinet.

7. If needed for your new cabinet(s), remove power supplies from each CRAY T3E cabinet that you will remove.

8. If needed for your new cabinet(s), remove modules from each CRAY T3E cabinet that you will remove.

9. Prepare the cabinets for wire removal. For example, remove doors, remove access panels, and open intercabinet cable ducts. Refer to similar procedures in this document for help.

10. Disconnect the torus wires between the cabinet(s) that you will remove and the cabinet(s) that you will not remove. Refer to the wiring procedures in this document and to the Engineering upgrade specification for help.

11. Disconnect the boundary scan wires between the cabinet(s) that you will remove and the cabinet(s) that you will not remove. Refer to the wiring procedures in this document and to the Engineering upgrade specification for help. (When possible, do not disconnect wires from the clock rail; instead, disconnect them in the wiremat and reuse them for the upgrade.)

12. Disconnect the clock wires between the cabinet(s) that you will remove and the cabinet(s) that you will not remove. Refer to the wiring procedures in this document and to the Engineering upgrade specification for help.

13. Unbolt the cabinets.

14. If needed for your new cabinet(s), remove intercabinet cable troughs from the CRAY T3E cabinet(s) that you will remove.

15. Pack the cabinet(s) for shipment; reverse the unpacking procedures in this document, with any necessary deviations.

Appendix C – Example Upgrade Specification

The following pages contain a copy of an Engineering upgrade specification (*T3E Air Cooled Module and Wire Reconfiguration*) similar to the one that you will receive with your upgrade materials. This version of the specification contains explanatory notes to help you interpret them.

“Module and Wire Reconfiguration upgrade specification"

T3E Air Cooled

Module and Wire Reconfiguration

AC16 (20 PEs) -> AC24 (28 PEs)

NOTE: This specification has been modified from its released form. It includes notes that help explain the wire reconfiguration.

CRAY SPEC. NUMBER
801132

Cray Research Proprietary

Revision History

A0	Initial Release

CRAY SPEC. NUMBER
801132

Table of Contents

1.0 SCOPE 4

2.0 CONFIDENTIALITY 4

3.0 REFERENCES 4

4.0 MODULE RECONFIGURATION 4

5.0 MODULE LOCATIONS AND ORIENTATION 4

6.0 WIRING RECONFIGURATION 5

6.1 TORUS 5

6.2 BOUNDARY SCAN 6

6.3 CLOCK 6

Cray Research Proprietary

1.0 SCOPE

The purpose of this specification is to define the module and wiring changes needed to convert T3E Air Cooled model AC16 (20 PEs) to a model AC24 (28 PEs).

2.0 CONFIDENTIALITY

This document and referenced documentation contains proprietary information to Cray Research, Inc. Any disclosure or use of these documents is prohibited without prior written approval from Cray Research, Inc.

3.0 REFERENCES

For other module interconnect refer to engineering specifications; Wire Lists,(Interconnect Network AC / Boundary Scan AC / GigaRing AC / Clock AC) and for other system configurations refer to engineering specifications; Sys Config,Logic Module AC.

4.0 MODULE RECONFIGURATION

	T3E AC16 (20 PEs)		T3E AC24 (28 PEs)	
	User Nodes	Support Nodes	User Nodes	Support Nodes
PE Node Count	16	4	24	4
PE Module Count	4	1	6	1
PE Module Slot #	1-4	5	Chassis 0: 1-5 Chassis 1: 1	Chassis 1: 2

5.0 MODULE LOCATIONS AND ORIENTATION

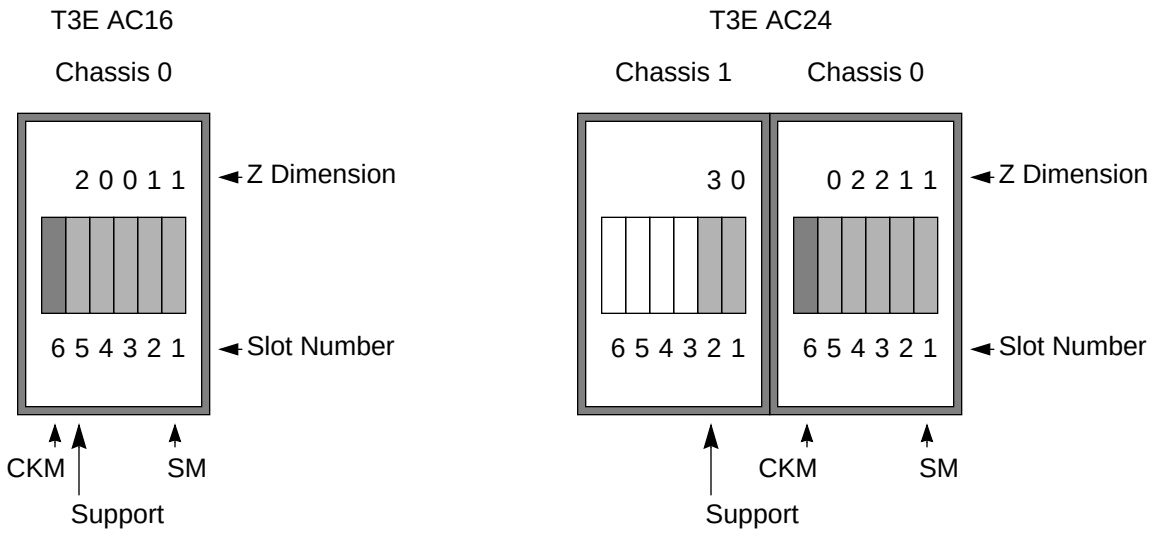

Cray Research Proprietary

6.0 WIRING RECONFIGURATION

6.1 TORUS

15112905 is the part number of the cables. (x2) means that there are two cables.

Logical dimension

Y-side (Bottom) Torus Connections

Disconnect

< 0-02-yab	0-04-yab	15112905(x2)	Z dimension
< 0-02-yac	0-04-yac	15112905(x2)	Z dimension
< 0-02-yak	0-04-yak	15112905(x2)	Z dimension
< 0-02-yal	0-04-yal	15112905(x2)	Z dimension
< 0-03-yab	0-05-yab	15112905(x2)	Z dimension
< 0-03-yak	0-05-yak	15112905(x2)	Z dimension

Connect

> 0-02-yab	0-04-yac	15112905(x2)	Z dimension
> 0-02-yac	1-01-yac	15112905(x2)	Z dimension
> 0-02-yak	0-04-yal	15112905(x2)	Z dimension
> 0-02-yal	1-01-yal	15112905(x2)	Z dimension
> 0-03-yab	1-02-yac	15112905(x2)	Z dimension
> 0-03-yak	1-02-yal	15112905(x2)	Z dimension
> 0-04-yab	1-01-yab	15112905(x2)	Z dimension
> 0-04-yak	1-01-yak	15112905(x2)	Z dimension
> 0-05-yab	1-02-yab	15112905(x2)	Z dimension
> 0-05-yad	1-01-yad	15112906(x2)	Y dimension
> 0-05-yak	1-02-yak	15112905(x2)	Z dimension
> 0-05-yam	1-01-yam	15112906(x2)	Y dimension
> 1-01-yaa	1-01-yaj	15112904(x2)	X dimension
> 1-02-yaa	1-02-yaj	15112904(x2)	X dimension

Disconnect cable assembly 0-03-yak (connector yak in cabinet 0, slot 3) from cable assembly 0-05-yak (connector yak in cabinet 0, slot 5).

Reconnect 0-03-yak to 1-02-yal (connector yal in cabinet 1, slot 2).

Reconnect 0-05-yak to 1-02-yak (connector yak in cabinet 1, slot 2).

Z-side (Top) Torus Connections

Disconnect

< 0-02-zae	0-04-zae	15112905(x2)	Z dimension
< 0-02-zaf	0-04-zaf	15112905(x2)	Z dimension
< 0-02-zan	0-04-zan	15112905(x2)	Z dimension
< 0-02-zao	0-04-zao	15112905(x2)	Z dimension
< 0-03-zaf	0-05-zaf	15112905(x2)	Z dimension
< 0-03-zao	0-05-zao	15112905(x2)	Z dimension

Connect

> 0-02-zae	1-01-zae	15112905(x2)	Z dimension
> 0-02-zaf	0-04-zae	15112905(x2)	Z dimension
> 0-02-zan	1-01-zan	15112905(x2)	Z dimension
> 0-02-zao	0-04-zan	15112905(x2)	Z dimension
> 0-03-zaf	1-02-zae	15112905(x2)	Z dimension
> 0-03-zao	1-02-zan	15112905(x2)	Z dimension
> 0-04-zaf	1-01-zaf	15112905(x2)	Z dimension
> 0-04-zao	1-01-zao	15112905(x2)	Z dimension
> 0-05-zad	1-01-zad	15112906(x2)	Y dimension

> 0-05-zaf	1-02-zaf	15112905(x2)	Z dimension
> 0-05-zam	1-01-zam	15112906(x2)	Y dimension
> 0-05-zao	1-02-zao	15112905(x2)	Z dimension
> 1-01-zag	1-01-zap	15112904(x2)	X dimension
> 1-02-zag	1-02-zap	15112904(x2)	X dimension

Cray Research Proprietary

6.2 BOUNDARY SCAN

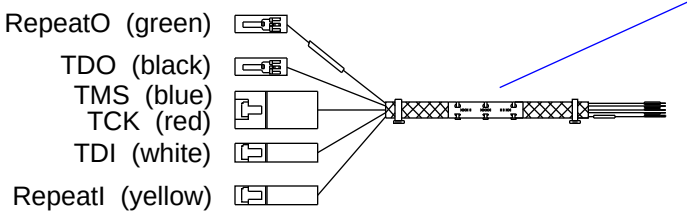

Cable Assy, PEM to Scan

This is cable 15214300, which is referred to as the *pigtail*.

Connector P1 is marked with red and blue.

P2 is marked black.

P3 is marked white.

P4 is marked green.

P5 is marked yellow.

Disconnect

1	001-zai43	15237601	005-zah54	black	TDOF[0] < TDOM

Connect

2	006-zaf39	15237701 P2	101-zah52	15214300, red	1-68 TCK FO > TCKM	
	006-zae46	P3	101-zah51	blue	1-34 TMS FO > TBSMb	
3	005-zah54	15214300, black	15223802	101-zah53	white	TDOM > TDIM

2	006-zaf38	15237701 P2	102-zah52	15214300, red	1-68 TCK FO > TCKM
	006-zae45	P3	102-zah51	blue	1-34 TMS FO > TBSMb
1	001-zai43	15237601	102-zah54	black	TDOF[0] < TDOM
3	101-zah54	15214300, black	102-zah53	white	TDOM > TDIM

1 **These lines refer to cable 15237601.** 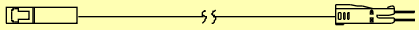 **These are wiremat connections; ignore the references to pin locations.**

Disconnect the wiremat connector from P2 (black) on the pigtail of the last *old* PEM in the system (in this case, slot 005).

Connect the wiremat connector to P2 (black) on the pigtail of the last *new* PEM in the system (in this case, slot 102).

2 **These lines refer to two 4-position edge-to-pigtail cables (P/N 15237701). P1** 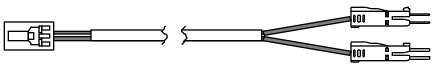

For each cable, connect P2 to connector zaf of the top clock rail (in this case, slot 006, pin locations 38 and 39).

For each cable, connect P3 to connector zae of the top clock rail (in this case, slot 006, pin locations 45 and 46).

For each cable, connect P1 to the 4-position connector (P1) on each new PEM's pigtail (in this case, slots 101 and 102).

3 **These lines refer to the daisy chain connections between the pigtails of adjacent PEMs. These are wiremat connections; ignore the references to pin locations.**

Connect P2 (black) on the pigtail of the lower-numbered PEM to P3 (white) on the pigtail of the higher-numbered PEM. (In this case, from slot 005 to slot 101 and from slot 101 to slot 102.)

When the connection spans cabinets, use a scan jumper cable (P/N 15223802), as shown in the first connection.

6.3 CLOCK

Connect

006-zag13	101-zah03	120	15223701	SysClock Fanout to PEM5
006-zag14	102-zah03	120	15223701	SysClock Fanout to PEM6

006-zah24	101-zah07	120	15224008	GRing Clock Fanout to PEM5
006-zah25	102-zah07	120	15224008	GRing Clock Fanout to PEM6

These are the system clock wires (P/N 15223701).

Connect them between connector zah, pin location 03, of each top PEM rail (in this case, slots 101 and 102) and connector zag of the top clock rail (in this case, pin locations 13 and 14 of clock module 0, which is in slot 006).

These are the GigaRing clock wires (P/N 15224008).

Connect them between connector zah, pin location 07, of each top PEM rail (in this case, slots 101 and 102) and connector zah of the top clock rail (in this case, pin locations 24 and 25 of clock module 0, which is in slot 006).

Cray Research Proprietary