# Illustrated Parts Catalog

**(CRAY T3E™ Air-cooled System)**

**HMM-170-0**

Cray Research Proprietary

**Cray Research, Inc.**

# Record of Revision

| REVISION | DESCRIPTION |
| --- | --- |
| | October 1996. Original printing. |

Any shipment to a country outside of the United States requires a letter of assurance from Cray Research, Inc.

This document is the property of Cray Research, Inc. The use of this document is subject to specific license rights extended by Cray Research, Inc. to the owner or lessee of a Cray Research, Inc. computer system or other licensed party according to the terms and conditions of the license and for no other purpose.

Cray Research, Inc. Unpublished Proprietary Information — All Rights Reserved.

Autotasking, CF77, CRAY, CRAY-1, Cray Ada, CraySoft, CRAY Y-MP, CRInform, CRI/*Turbo*Kiva, HSX, LibSci, MPP Apprentice, SSD, SUPERCLUSTER, SUPERSERVER, UNICOS, and X-MP EA are federally registered trademarks and Because no workstation is an island, CCI, CCMT, CF90, CFT, CFT2, CFT77, ConCurrent Maintenance Tools, COS, CRAY-2, Cray Animation Theater, CRAY APP, CRAY C90, CRAY C90D, Cray C++ Compiling System, CrayDoc, CRAY EL, CRAY J90, CRAY J90se, Cray NQS, Cray/REELlibrarian, CRAY S-MP, CRAY SUPERSERVER 6400, CRAY T3D, CRAY T3E, CRAY T90, CrayTutor, CRAY X-MP, CRAY XMS, CS6400, CSIM, CVT, Delivering the power . . ., DGauss, Docview, EMDS, GigaRing, HEXAR, IOS, ND Series Network Disk Array, Network Queuing Environment, Network Queuing Tools, OLNET, RQS, SEGLDR, SMARTE, SUPERLINK, System Maintenance and Remote Testing Environment, Trusted UNICOS, UNICOS MAX, and UNICOS/mk are trademarks of Cray Research, Inc.

Requests for copies of Cray Research, Inc. publications should be directed to:

CRAY RESEARCH, INC.
Customer Service Logistics
1100 Lowater Road
P. O. Box 4000
Chippewa Falls, WI 54729-0078

Comments about this publication should be directed to:

CRAY RESEARCH, INC.
Service Publications and Training
890 Industrial Blvd.
P.O. Box 4000
Chippewa Falls, WI 54729-0078

# Illustrated Parts Catalog

**HMM-170-0**

**Introduction** **3**

**Front View** **5**

Emergency Switch . . . . . 7
Clock Distribution Power Supply . . . . . 8
WACS Panel . . . . . 9
WACS Box . . . . . 10
WACS Board . . . . . 11
Power Supply . . . . . 12
Power Supply Rails . . . . . 13
Power Supply Circuit Breakers . . . . . 14
Digital Ground Bar . . . . . 15
Air Intake Filter . . . . . 16
Inlet Air Thermistor . . . . . 17
Power Box . . . . . 18

**Back View** **19**

Blower . . . . . 21
Thermistor and Thermostat . . . . . 22
Clock Switch Board . . . . . 23
PE Module . . . . . 24
Clock Module . . . . . 25
Module Rails . . . . . 26
Clock Rails . . . . . 27
Wires and Cables . . . . . 28

# Introduction

The CRAY T3E air-cooled (AC) system may be serviced by properly trained Cray Research service personnel, customer service personnel, or third-party maintainers. The purpose of this illustrated parts catalog is to assist service personnel in identifying the part numbers of parts they need to replace.

This catalog lists the major components, or field-replaceable units, of the CRAY T3E AC system. The *AC Repair and Adjustment Procedures*, Cray Research publication number HMM-168-0, describes these components and their removal and replacement procedures. If you have access to the Cray Research server hydra, you may access the *CRAY T3E Spares Support Plan*, which lists the hardware maintenance tools and miscellaneous supplies and their part numbers. The /home/hydra/spe/spares directory contains both FrameMaker (t3e.fm) and postscript (t3e.ps) versions of the of the support plan.

The parts ordering system at Cray Research ensures shipment of the most up-to-date parts. When you order parts using the part numbers in this catalog, you can be assured that you will receive the latest versions of the parts even if the part numbers have changed. If you are ordering from outside the United States, you may want to verify the part number with Logistics first to avoid problems with customs when the part arrives.

# Front View

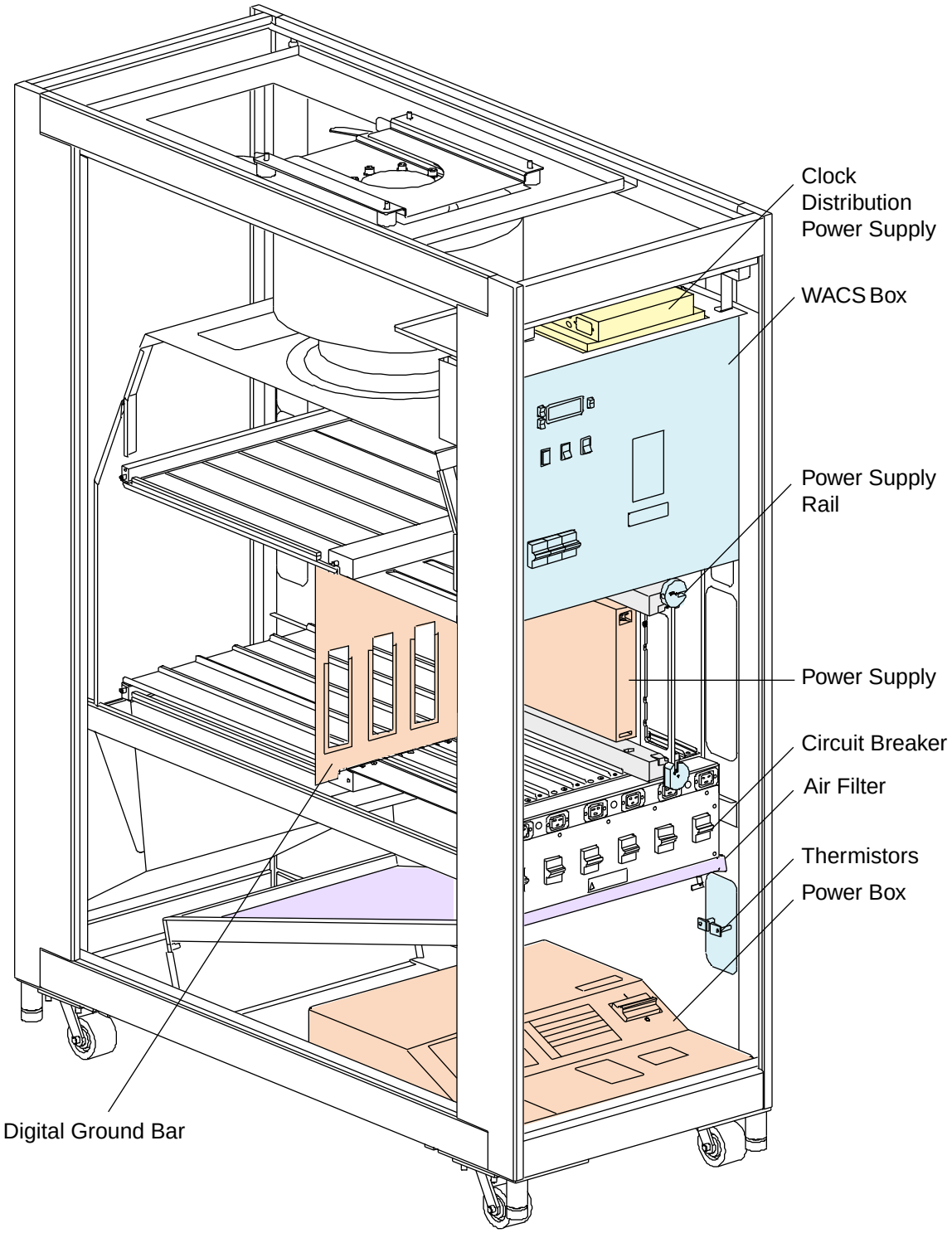
Clock
Distribution
Power Supply
WACS Box
Power Supply
Rail
Power Supply
Circuit Breaker
Air Filter
Thermistors
Power Box
Digital Ground Bar

# Emergency Switch

| Ref. No | Part Number | Description |
|---|---|---|
| 1 | 57199100 | Switch, Rocker (emergency) |

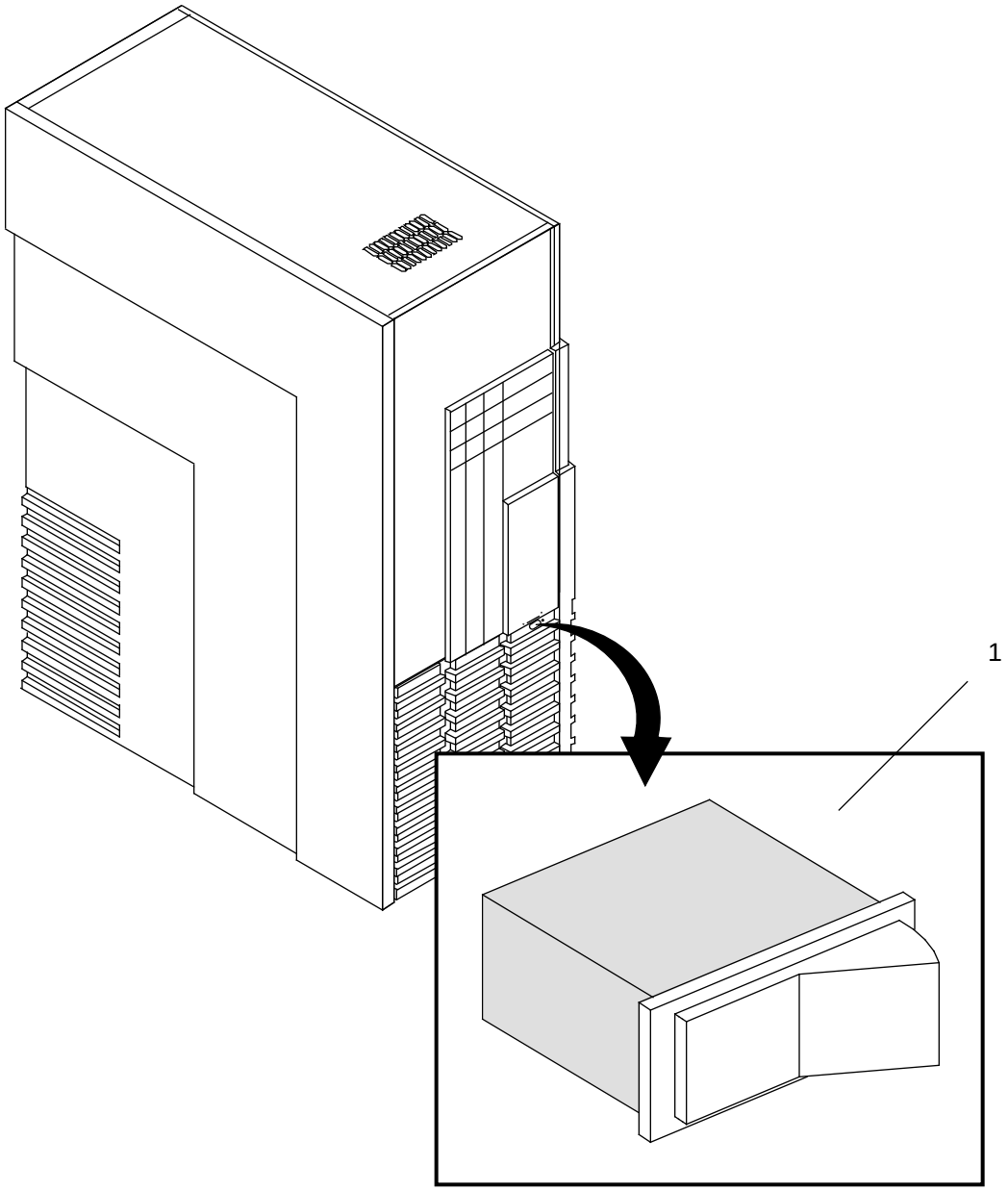

# Clock Distribution Power Supply

| Ref. No | Part Number | Description |
|---|---|---|
| 2 | 57265400 | Clock Distribution Power Supply Assembly |

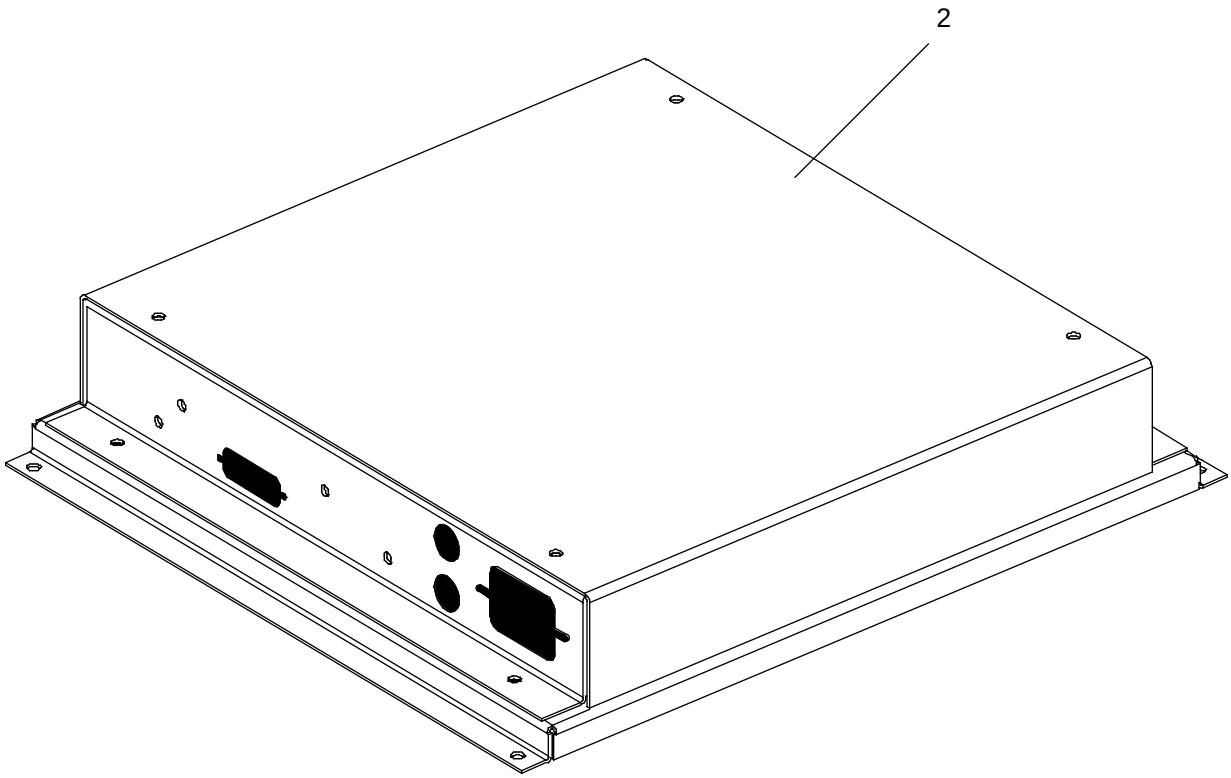

# WACS Panel

| Ref. No | Part Number | Description |
|---|---|---|
| 3 | 31445000 | Module Assembly, Disk IOSF Display |
| 4 | 57186400 | Switch, PB Gold Contacts (restart) |
| 5 | 57186500 | Switch, Rocker Green LED (remote enable) |

| Ref. No | Part Number | Description |
|---|---|---|
| 6 | 57186700 | Switch, Rocker Green LED (PS margin) |

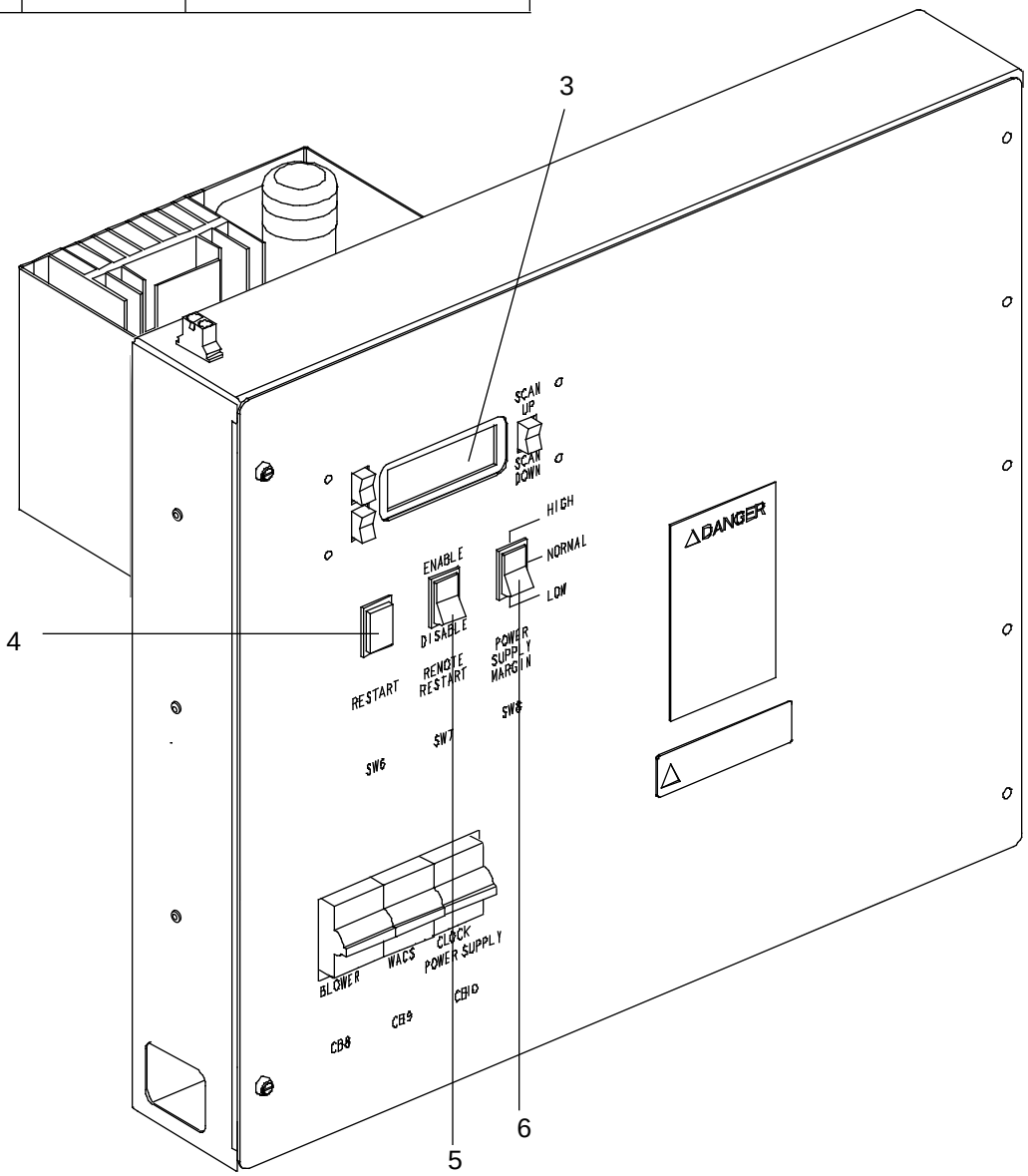

# WACS Box

| Ref. No | Part Number | Description |
|---|---|---|
| 7 | 57067701 | Controller, Power SCR 20 A with Transformer |
| 8 | 57081901 | Capacitor, Run 20MFD |
| 9 | 31504104 | Module Assembly, IOSF/T3E Air WACS |
| 10 | 31445000 | Module Assembly, Disk IOSF Display |
| 11 | 57084701 | Fuse, 250 V 2/10 A |

| Ref. No | Part Number | Description |
|---|---|---|
| 12 | 57140000 | Fuse Carrier |
| 13 | 57176102 | Circuit Breaker, 3 A (WACS and clock PS) |
| 14 | 57176101 | Circuit Breaker, 10 A (blower) |
| 15 | 57199101 | Switch, Rocker Silver Contacts (blower bypass) |

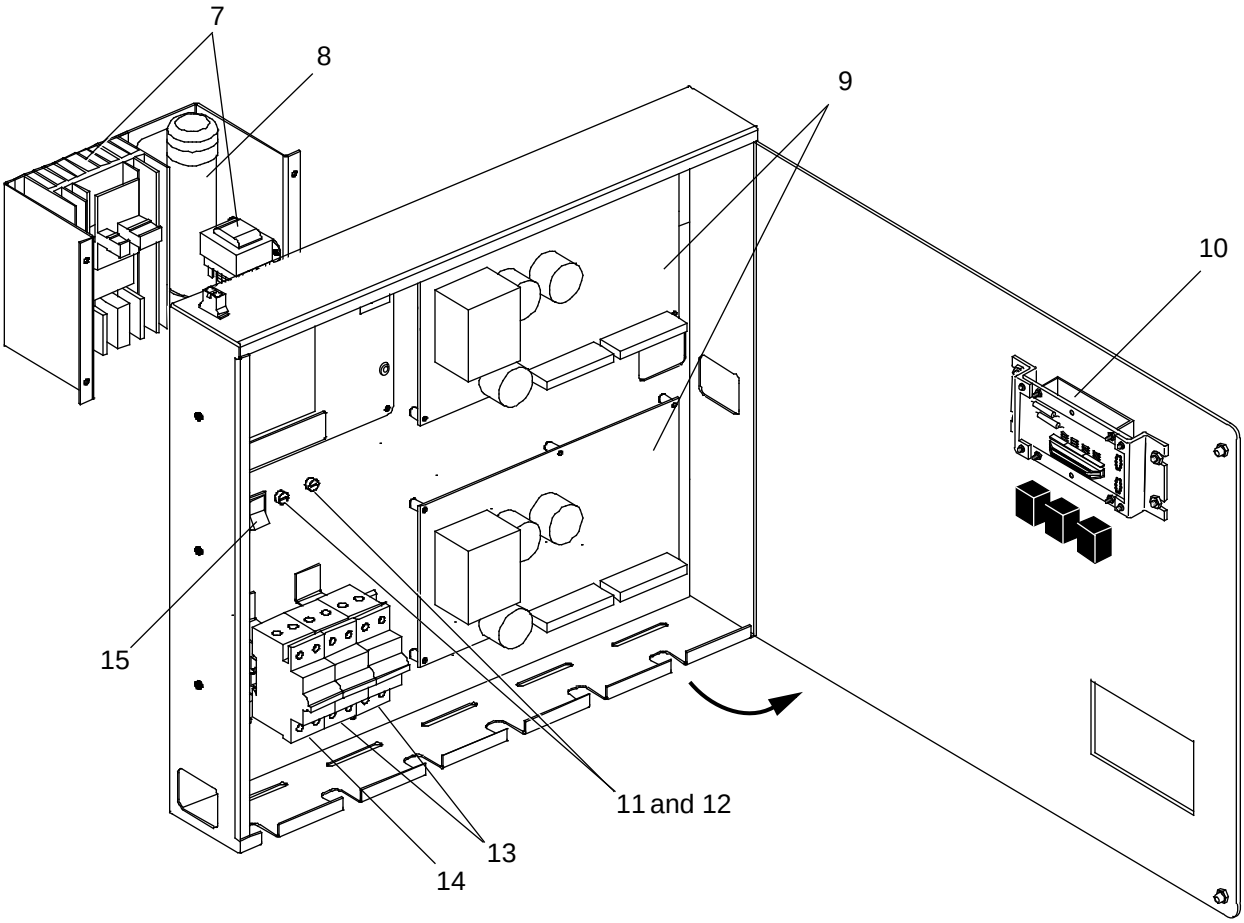

## WACS Board

| Ref. No | Part Number | Description |
|---|---|---|
| 16 | 31504104 | Module Assembly, IOSF/T3E Air WACS |
| 17 | 01134006 | Fuse, 250 V 1/2 A |
| 18 | 15135900 | IC, Micro T3E Air WACS |

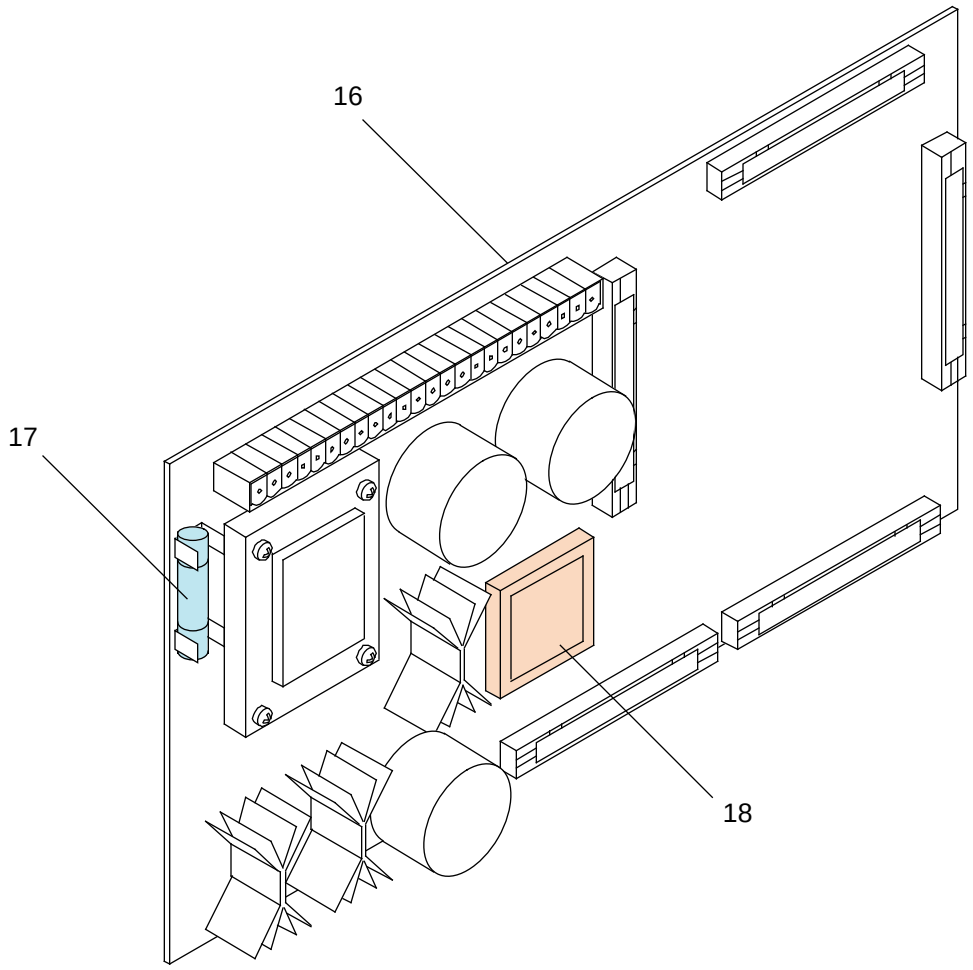

# Power Supply

| Ref. No | Part Number | Description |
|---|---|---|
| 19 | 13264100 | Power Supply, 3.3 V with Thermal Pad |
| 20 | 57177900 | Power Supply Heatsink |
| 21 | 57178000 | Power Supply Cover |
| 22 | 57266700 | Jumper, Clock Power Supply |
| 23 | 01158809 | Fuse, Ceramic 250 V 15 A |

| Ref. No | Part Number | Description |
|---|---|---|
| 24 | 57170001 | Cordset, IEC320 20 A 480 V |

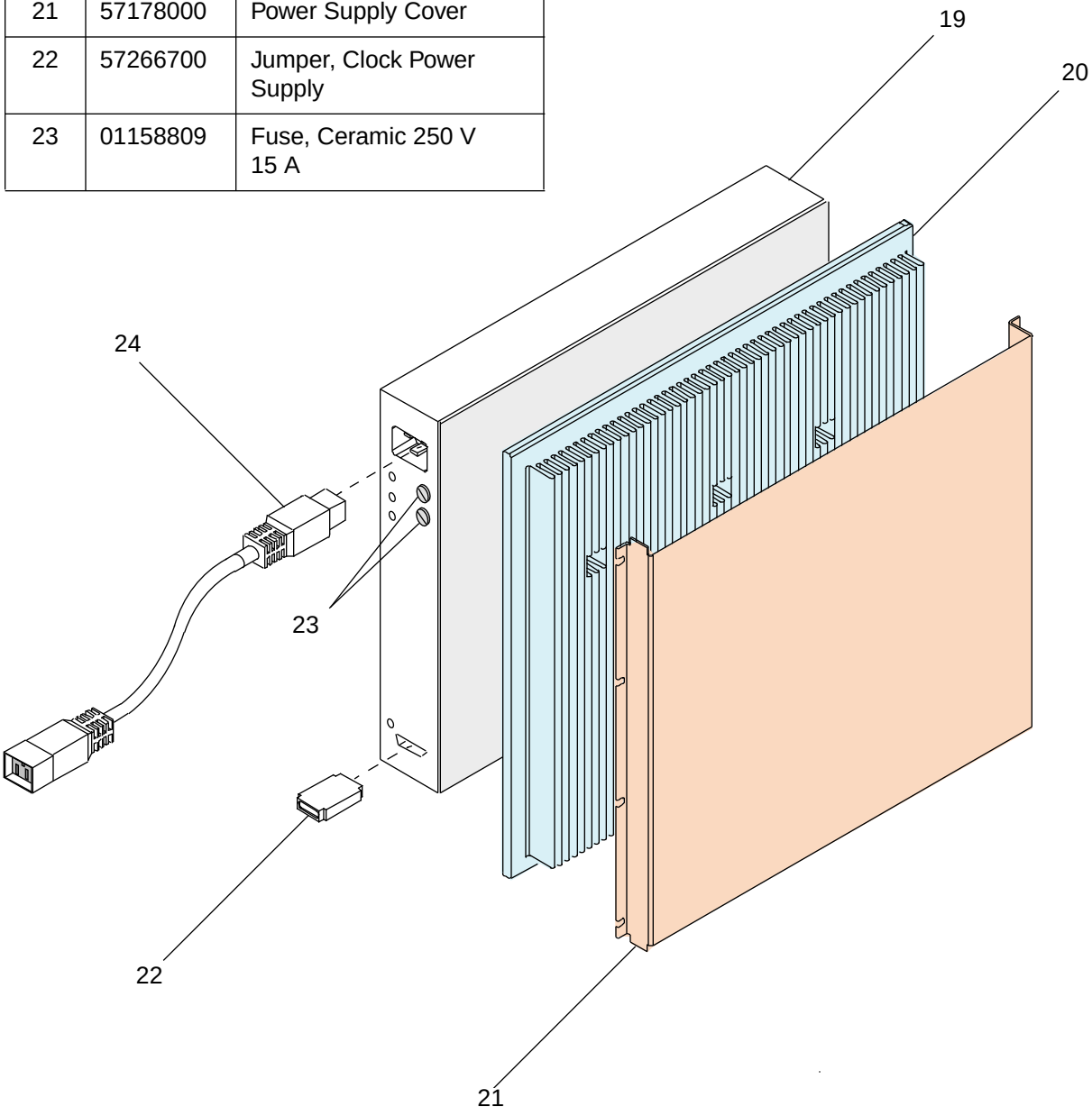

# Power Supply Rails

| Ref. No | Part Number | Description |
|---|---|---|
| 25 | 57252500 | Power Supply Rail (top) |
| 26 | 57252400 | Power Supply Rail (bottom) |

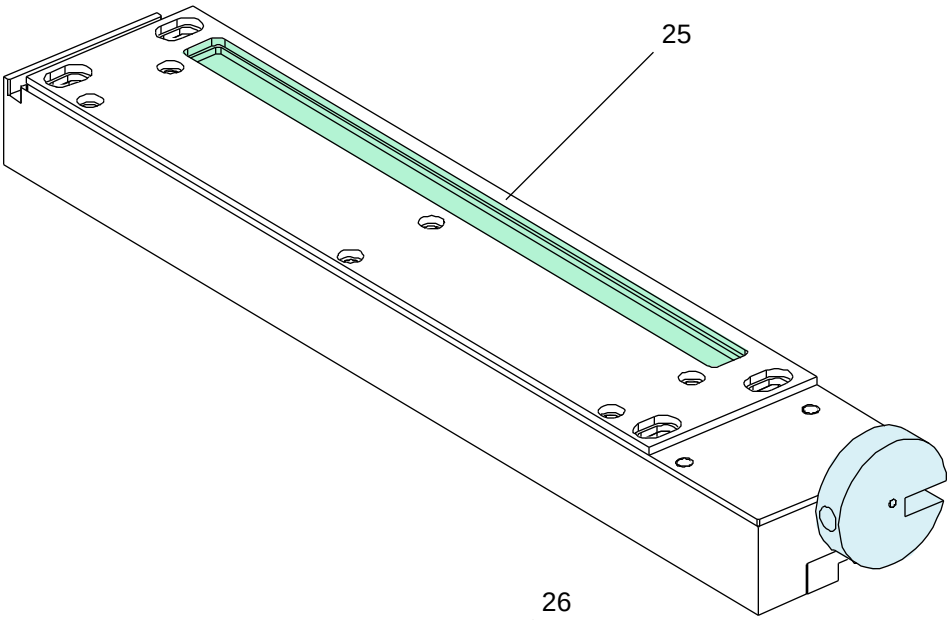


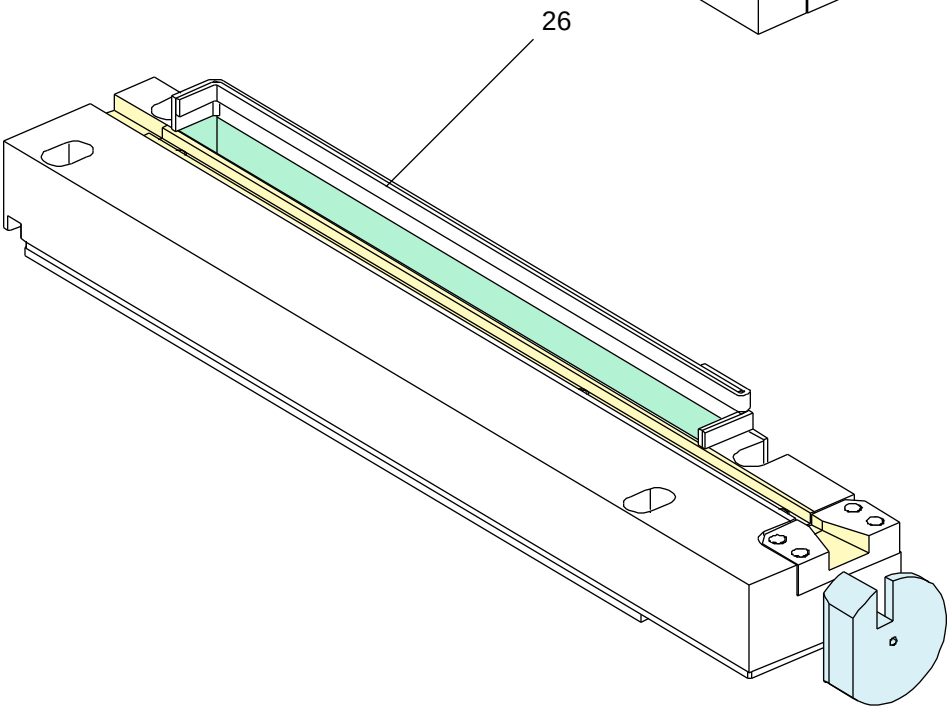

# Power Supply Circuit Breakers

| Ref. No | Part Number | Description |
|---|---|---|
| 27 | 57176100 | Circuit Breaker, 20 A 480 V |

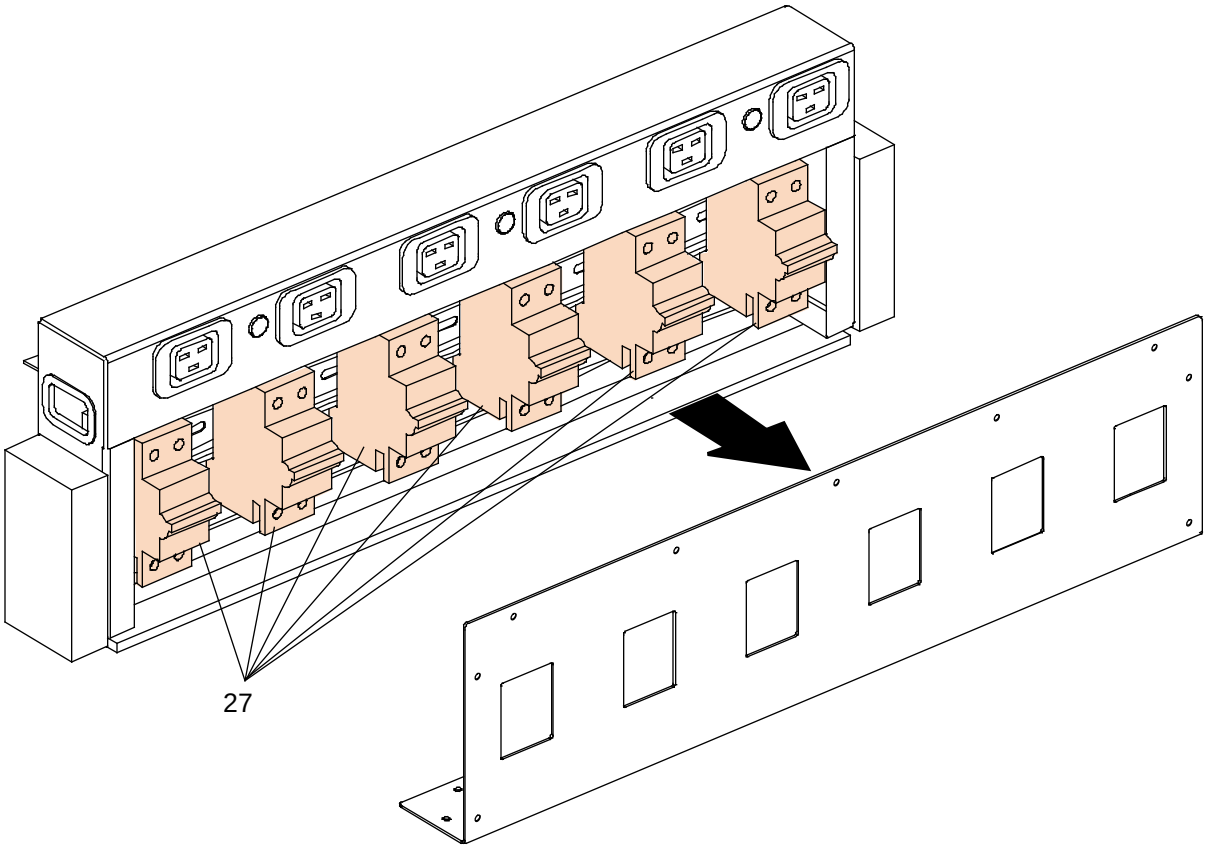

# Digital Ground Bar

| Ref. No | Part Number | Description |
|---|---|---|
| 28 | 57264800 | Digital Ground Bar Bracket Assembly |

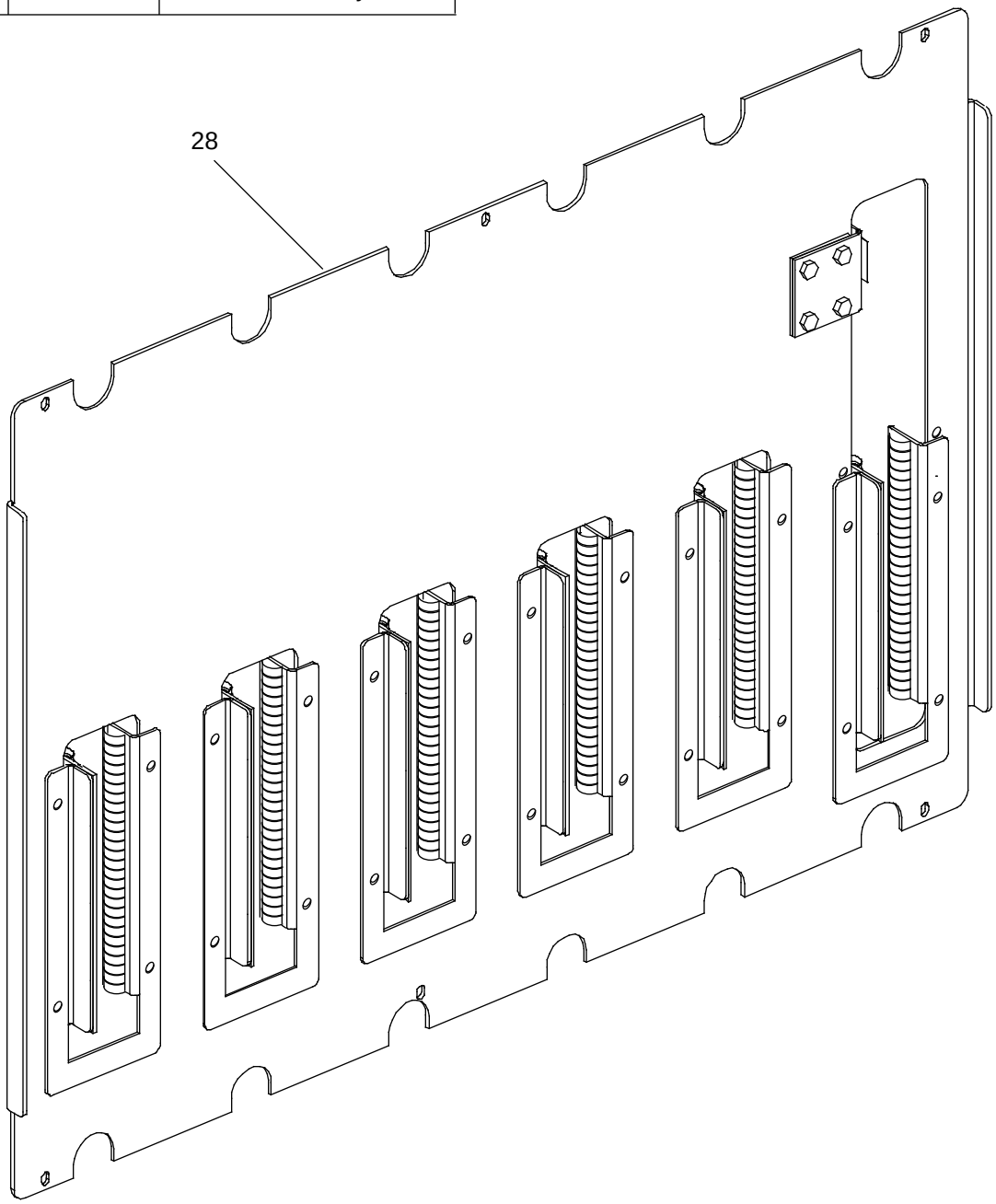

# Air Intake Filter

| Ref. No | Part Number | Description |
|---|---|---|
| 29 | 57188100 | Air Intake Filter |

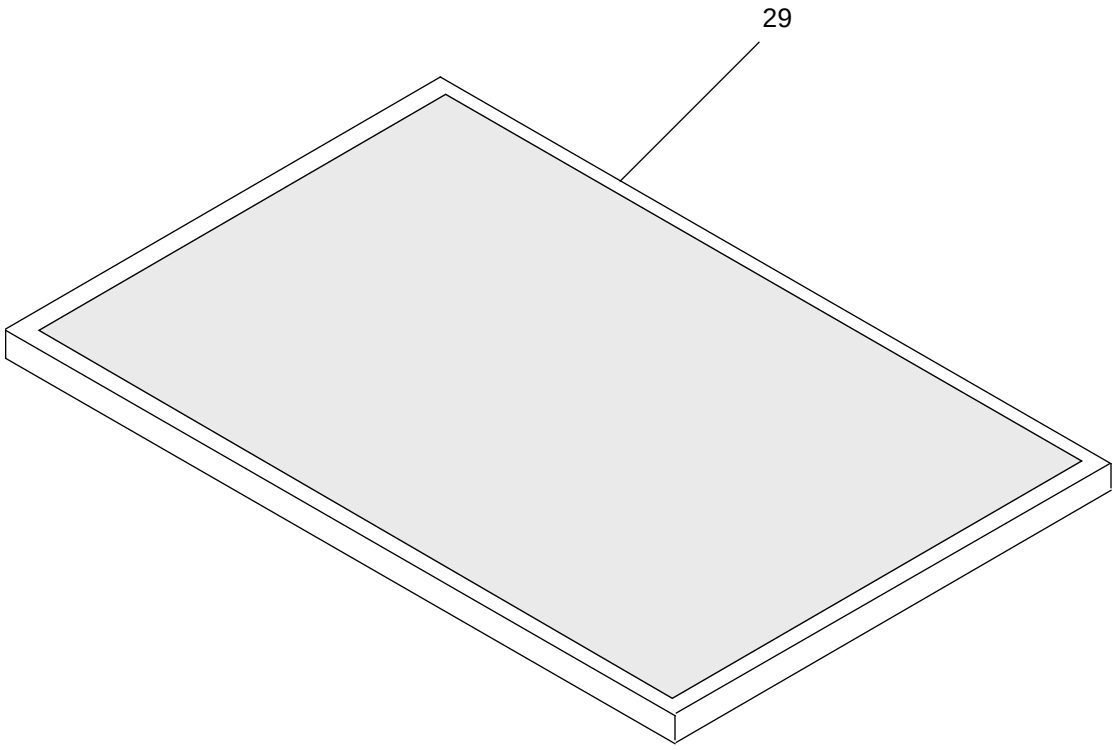

# Inlet Air Thermistor

| Ref. No | Part Number | Description |
|---|---|---|
| 30 | 57199600 | Thermistor Assembly, Air Intake/Bulkhead |

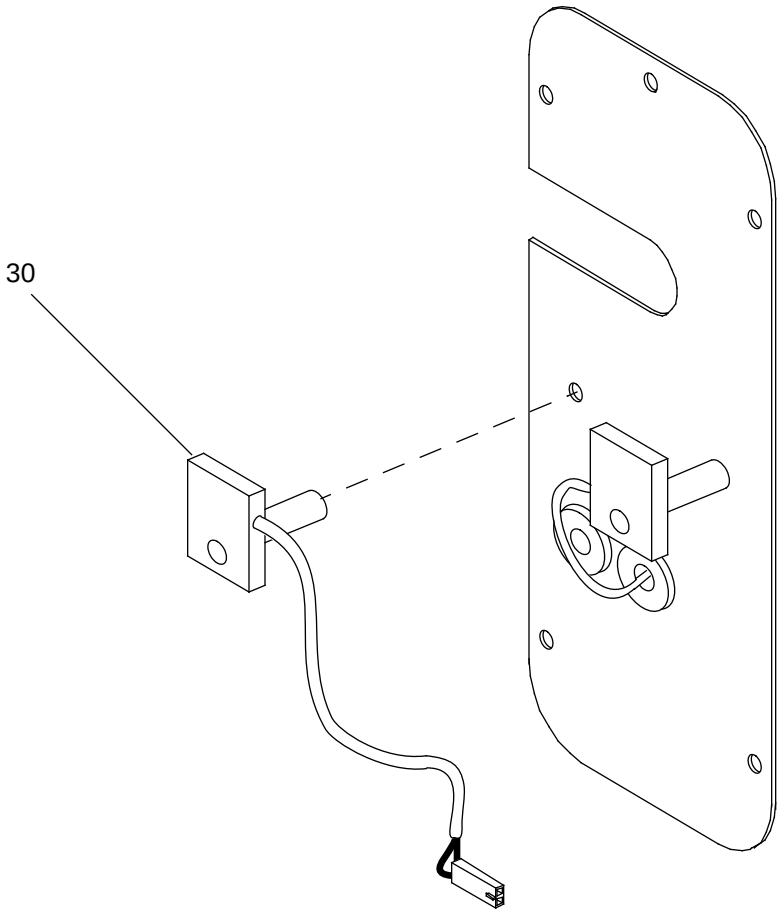

# Power Box

| Ref. No | Part Number | Description |
|---|---|---|
| 31 | 57186100 | Contactor, 4-pole 65 A 600 V |
| 32 | 57185700 | Switch, 600 V 40 A 5-stage (voltage selector) |
| 33 | 55091902 | Relay, Time Delay |
| 34 | 57168800 | Filter, Power 45 A |
| 35 | 57168600 | Circuit Breaker Assembly, 40 A 480 V (main disconnect) |

| Ref. No | Part Number | Description |
|---|---|---|
| 36 | 57181600 | Power Cord, 60 A, 250 Vac, 4-post (North America, Japan) |
| | 57181700 | Power Cord, 32 A, 400 Vac, 5-post (Europe) |
| 37 | 57074700 | Terminal Block |
| 38 | 57185400 | Resistor, 50 W 330-ohm |

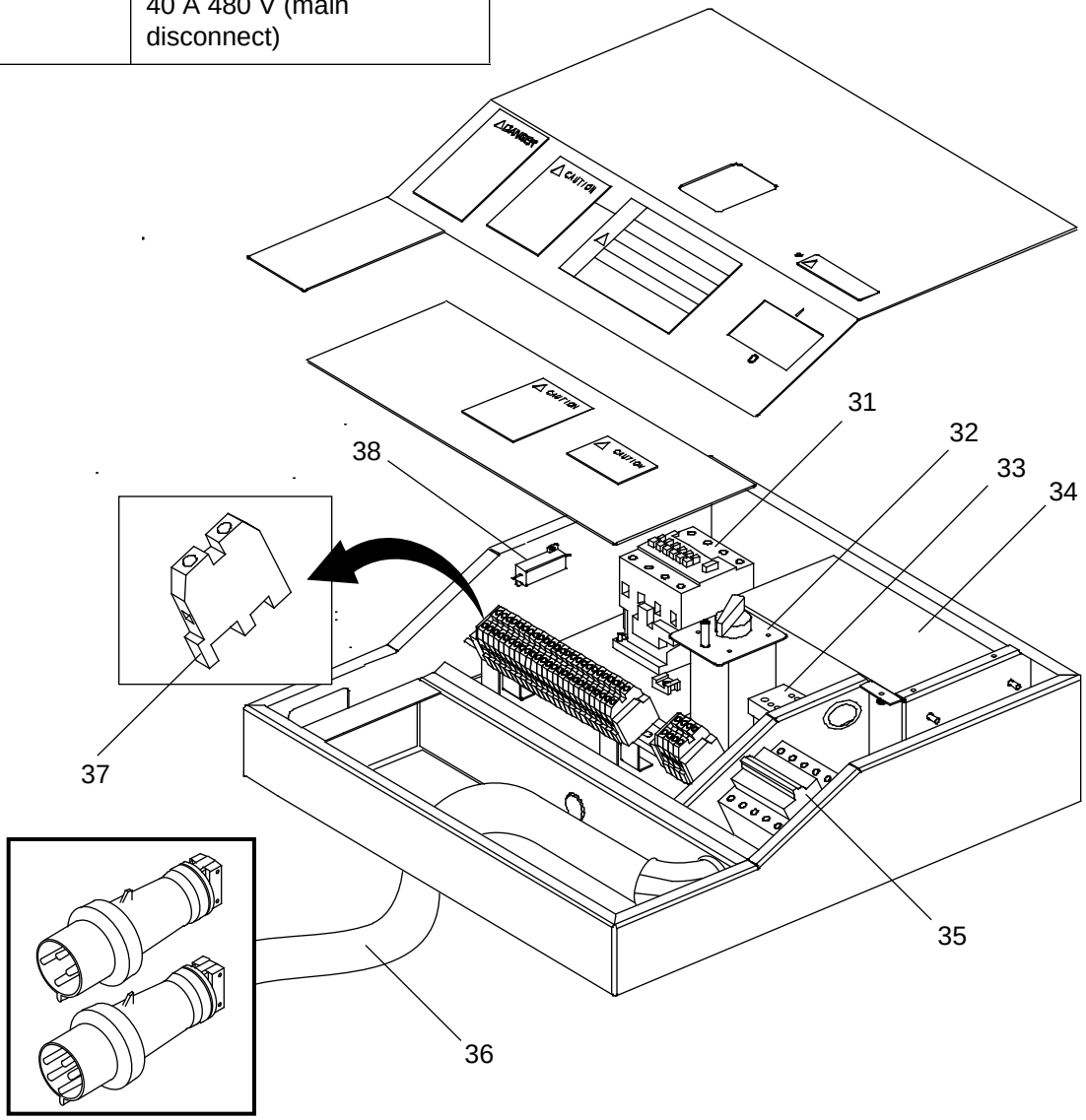

# Back View

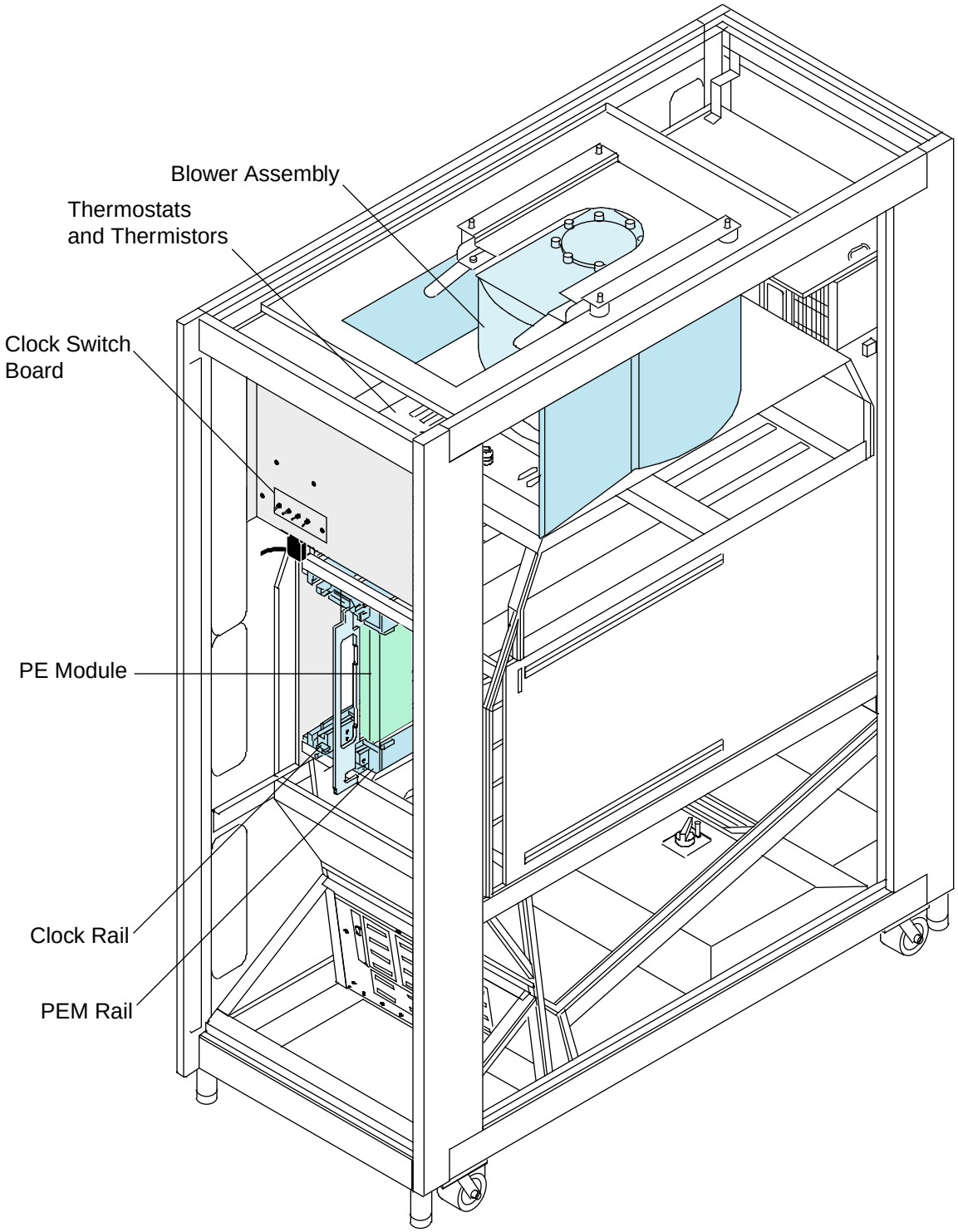
Blower Assembly
Thermostats
and Thermistors
Clock Switch
Board
PE Module
Clock Rail
PEM Rail

# Blower

| Ref. No | Part Number | Description |
|---|---|---|
| 39 | 57178900 | Blower Assembly, 18 in. |

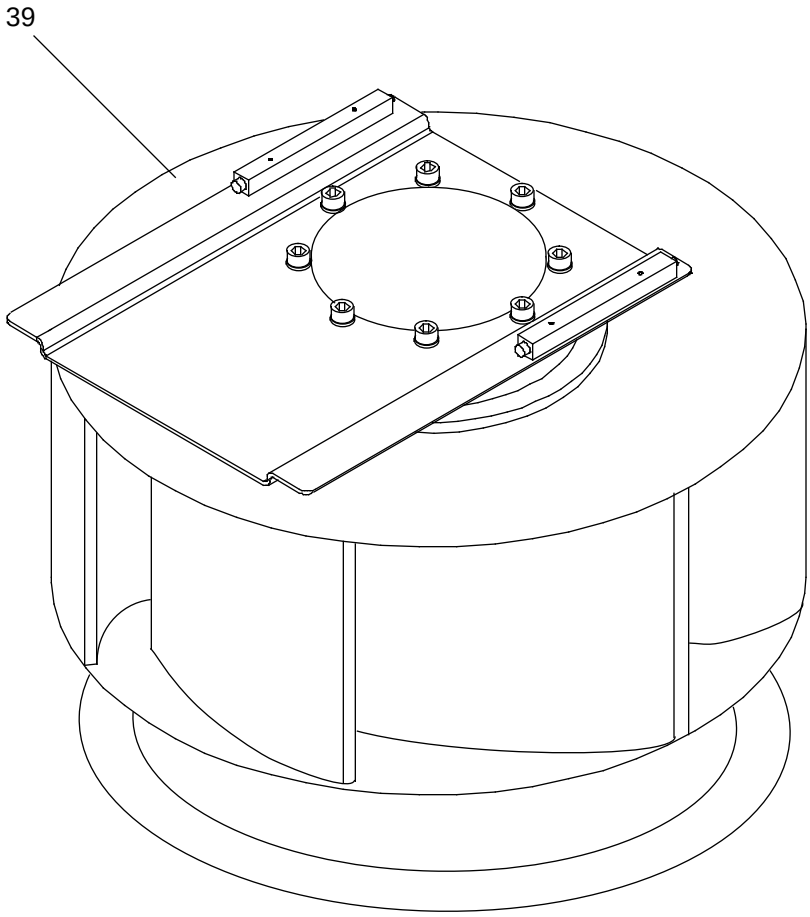

# Thermistor and Thermostat

| Ref. No | Part Number | Description |
|---|---|---|
| 40 | 57199600 | Thermistor |
| 41 | 57199700 | Thermostat, 65 Degrees C |

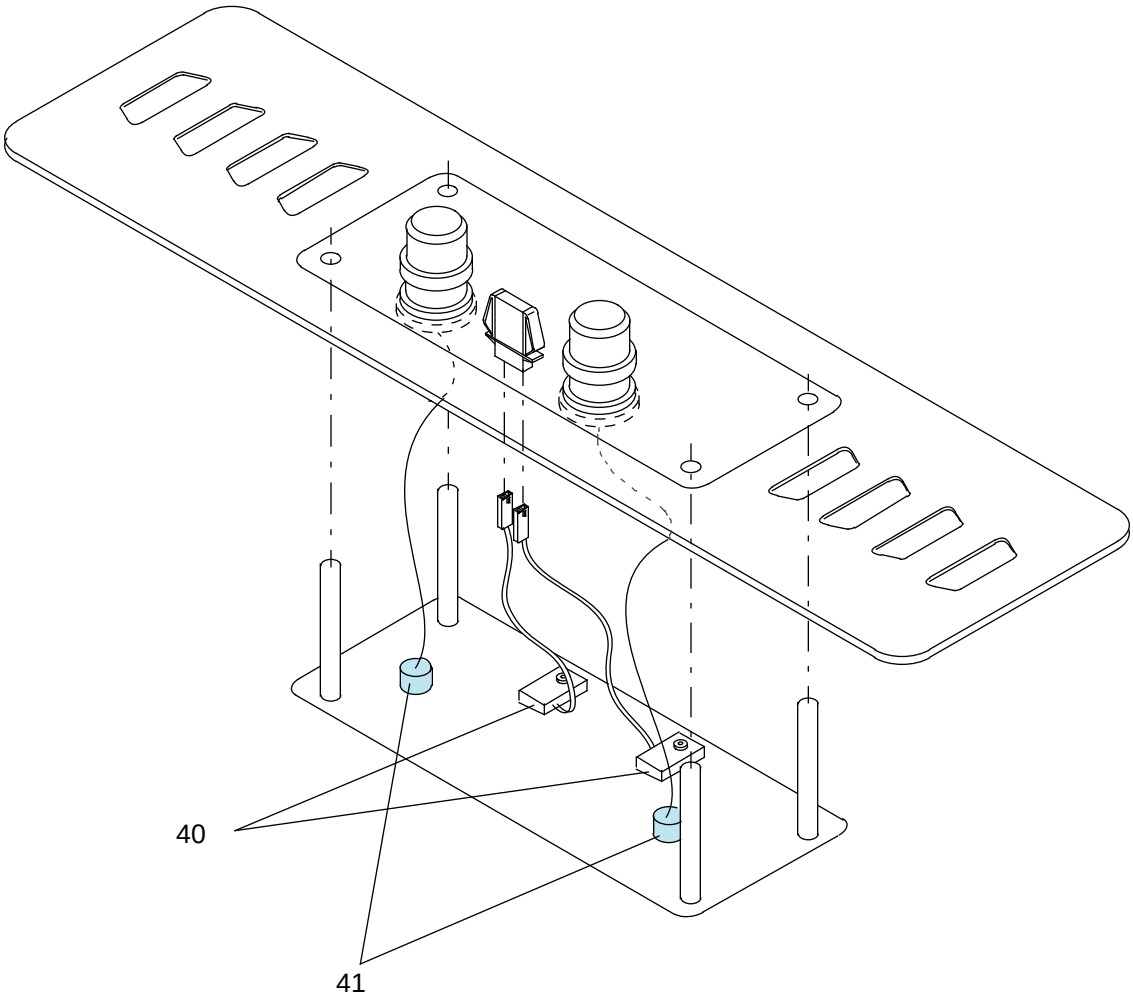

# Clock Switch Board

| Ref. No | Part Number | Description |
|---|---|---|
| 42 | 57253600 | PC Board Assembly, T3E Clock Switch (includes scan enable) |

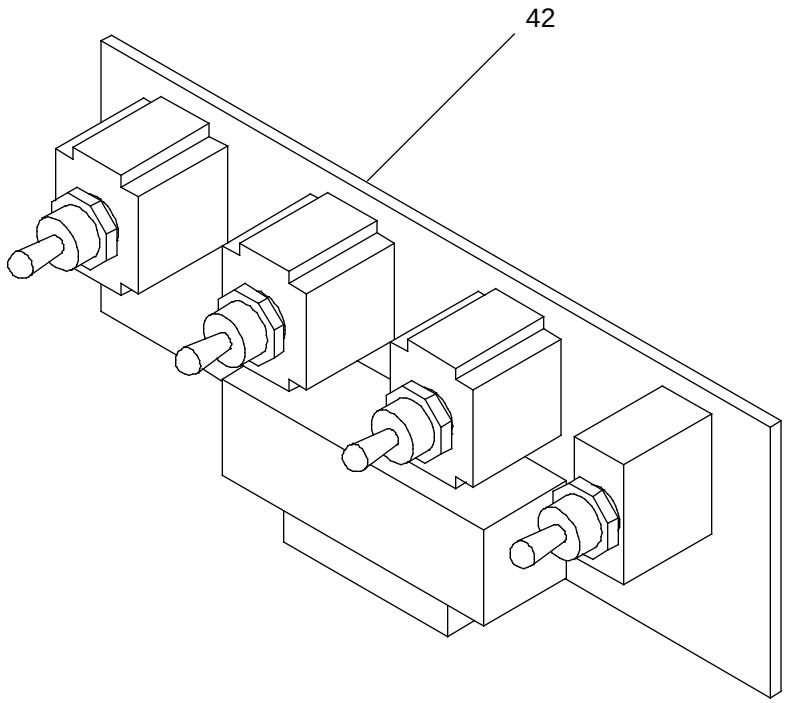

# PE Module

| Ref. No | Part Number | Description |
|---|---|---|
| 43 | 15104900 | Module Subassembly, PE AC 5_300 GR1 ICA |
| | 15148000 | Module Subassembly, PE AC 56_300 GR1 ICA |
| | 15152000 | Module Subassembly, PE AC 5_300 GR1 ICB |
| | 15155200 | Module Subassembly, PE AC 56_300 GR1 ICB |
| | 15159100 | Module Subassembly, PE AC 56_300 GR1 ICC |

| Ref. No | Part Number | Description |
|---|---|---|
| 44 | 57163500 | Module Handle |
| 45 | 15130000 | Thermistor Assembly |
| 46 | 15107601 | Daughter Board Assembly, 32 Mbyte |
| | 15104601 | Daughter Board Assembly, 64 Mbyte |
| | 15104001 | Daughter Board Assembly, 128 Mbyte |

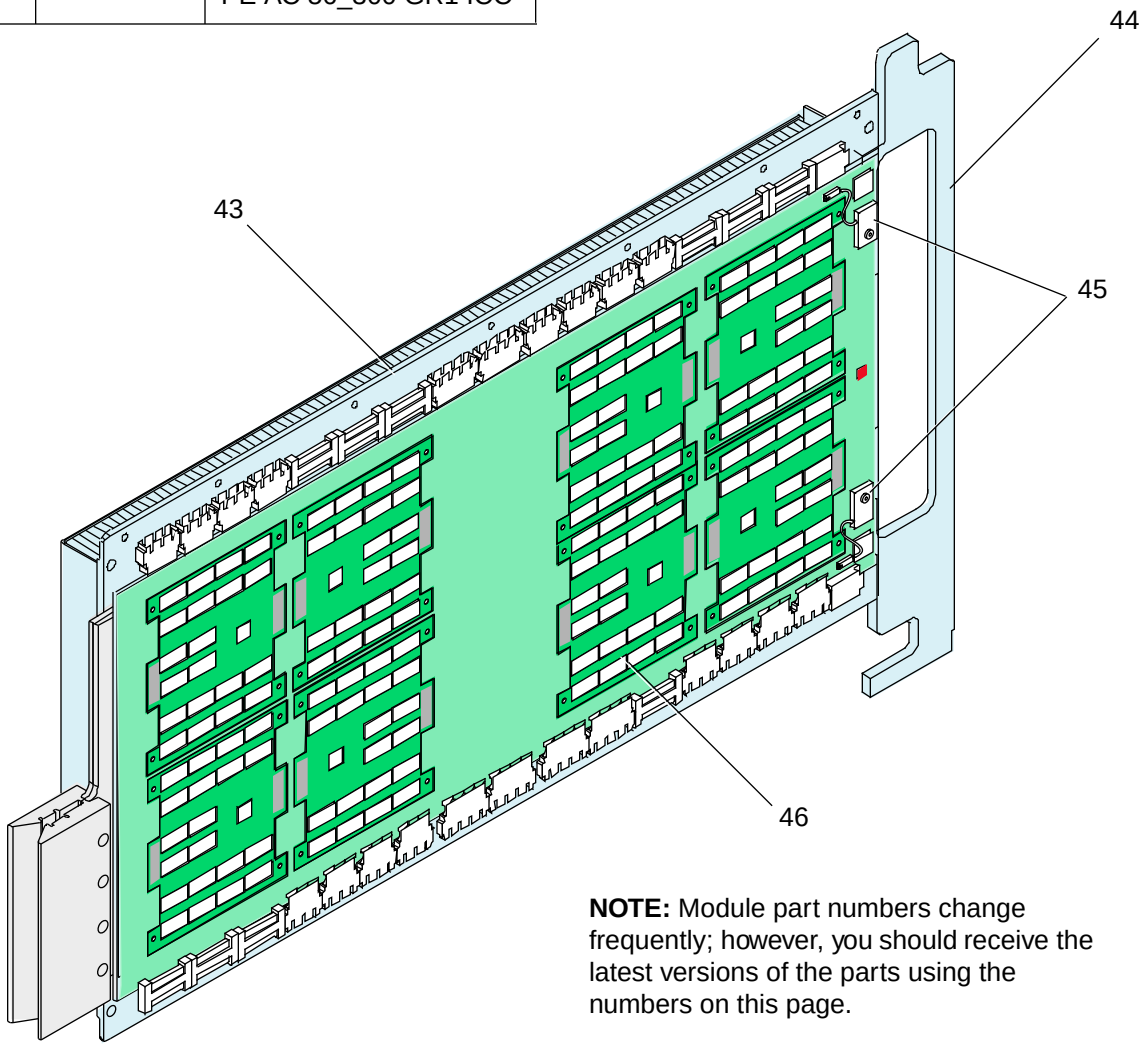


**NOTE:** Module part numbers change frequently; however, you should receive the latest versions of the parts using the numbers on this page.

# Clock Module

| Ref. No | Part Number | Description |
|---|---|---|
| 47 | 15164600 | Module Assembly, Clock |
| 48 | 57163500 | Module Handle |
| 49 | 15130000 | Thermistor Assembly |

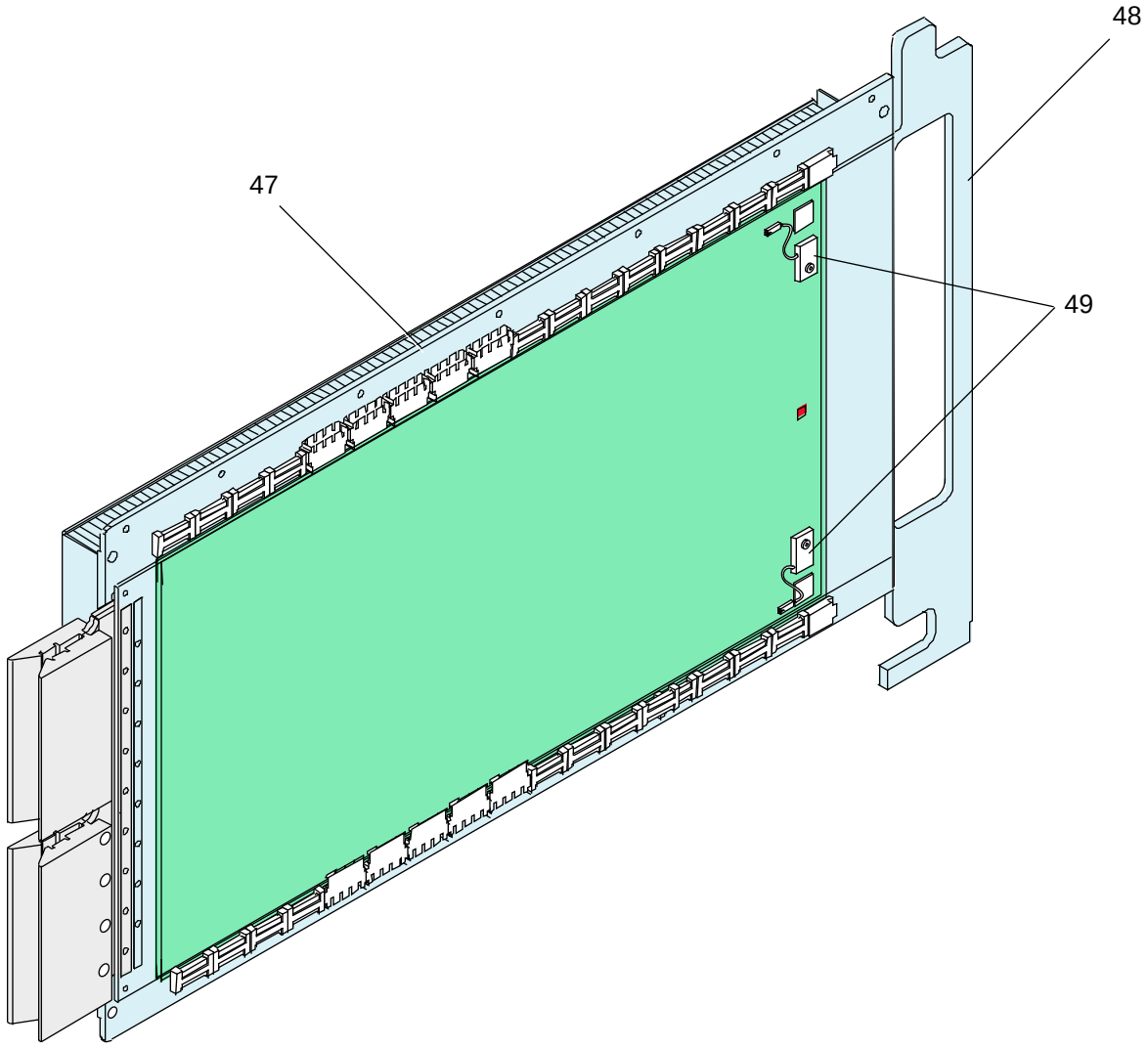

# Module Rails

| Ref. No | Part Number | Description |
|---|---|---|
| 50 | 57174200 | Rail Connector Plug |
| 51 | 57176200 | Rail Connector Plug |
| 52 | 57255300 | PEM Rail (top) |
| 53 | 15215600 | Module Rail Spring |
| 54 | 57255000 | PEM Rail (bottom) |

| Ref. No | Part Number | Description |
|---|---|---|
| 55 | 01775900 | Pin Connector Lock |
| 56 | 12755600 | Connector Spacer |

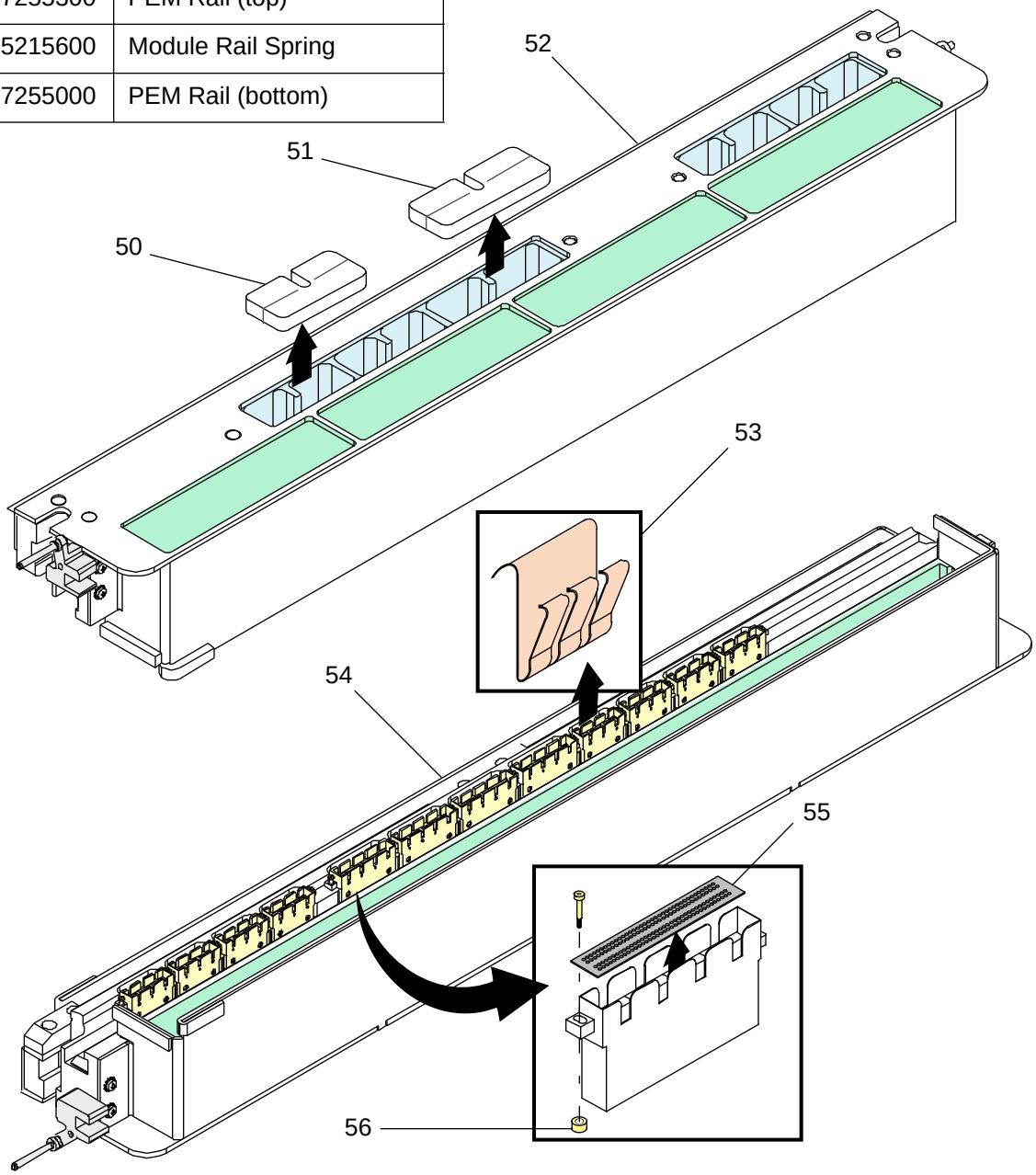

# Clock Rails

| Ref. No | Part Number | Description |
|---|---|---|
| 57 | 57175700 | Clock Rail (top) |
| 58 | 57176200 | Rail Connector Plug |
| 59 | 15215600 | Module Rail Spring |
| 60 | 01775900 | Connector Pin Lock |

| Ref. No | Part Number | Description |
|---|---|---|
| 61 | 12755600 | Connector Spacer |
| 62 | 57175600 | Clock Rail (bottom) |

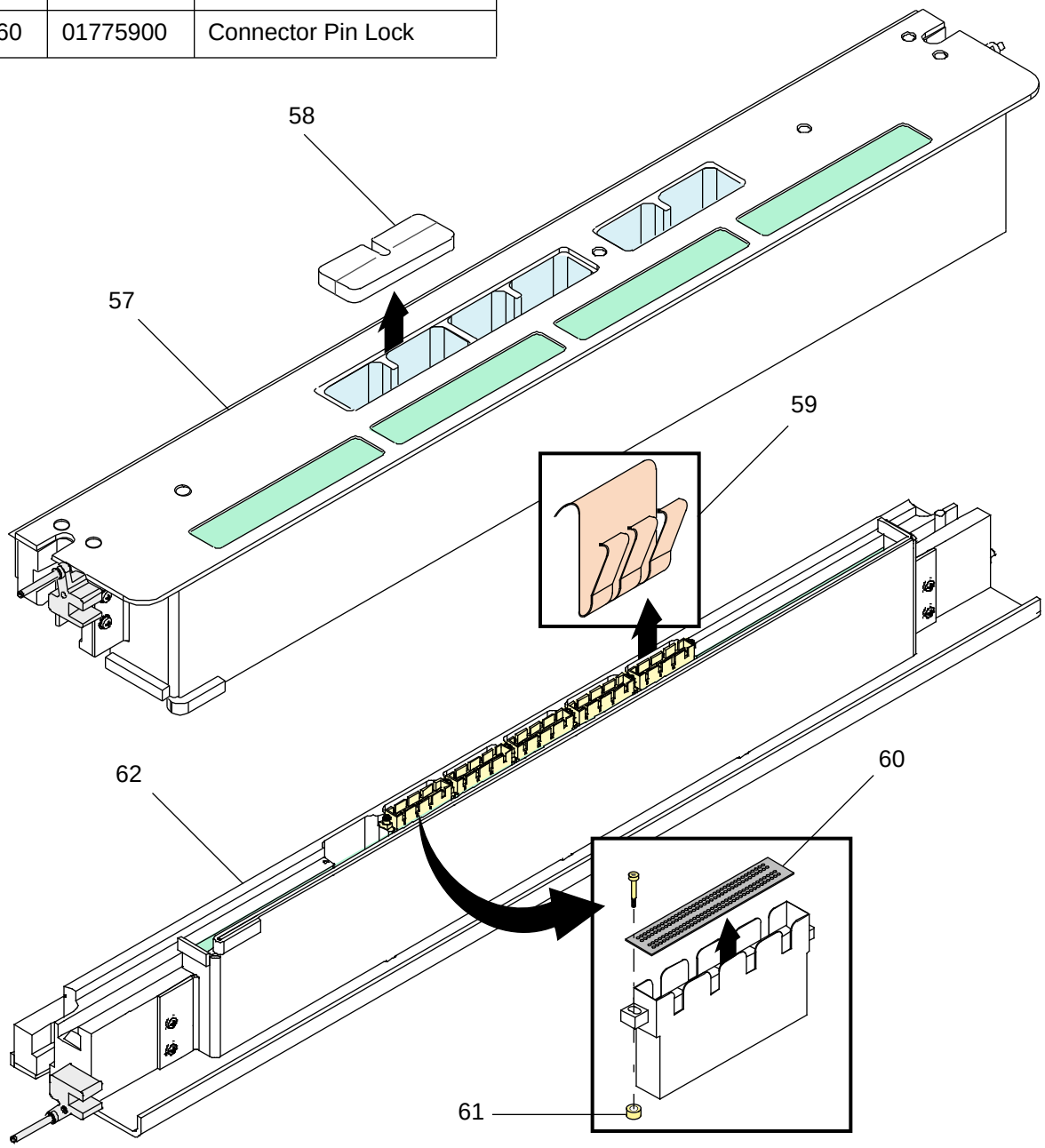

# Wires and Cables

| Torus | |
|---|---|
| **Part Number** | **Description** |
| 15112904 | Ribbon Cable Assembly<br>*X-dimension torus cable, 13 in., gray connector* |
| 15112906 | Ribbon Cable Assembly<br>*Y-dimension torus cable, 23 in., green connector* |
| 15112905 | Ribbon Cable Assembly<br>*Z-dimension torus cable, 24 in., blue connector* |

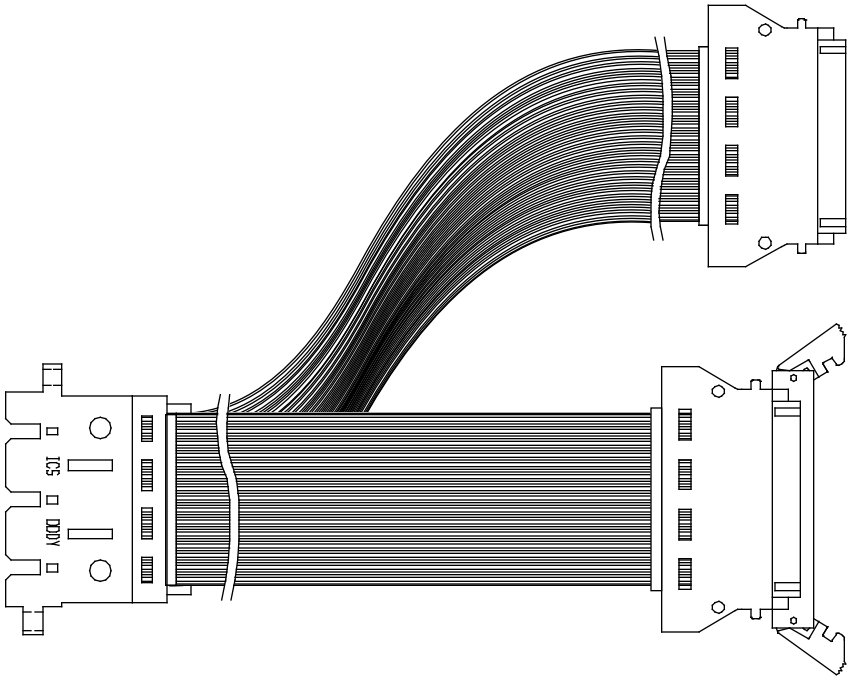

| Boundary Scan | |
|---|---|
| **Part Number** | **Description** |
| 15214300 | PEM-to-Scan Cable Assembly<br>*Boundary scan pigtail (one per PEM)*<br> 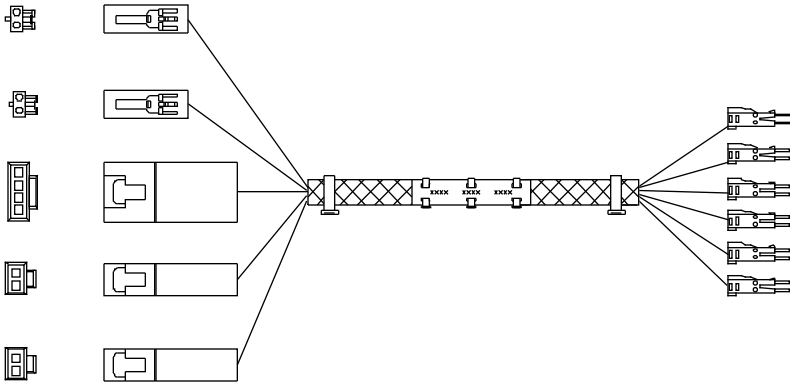 |
| 15223802 | Scan Jumper 120 in. Cable Assembly<br>*Links first and last PEM in scan chain 1. (REPEATI<TDOM)*<br> 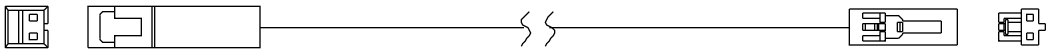 |
| 15237601 | 2-position Socket-to-Pigtail Cable Assembly<br>*Links last PEM in scan chain 0 to scan master. (TDOF[0]<TDOM)*<br> 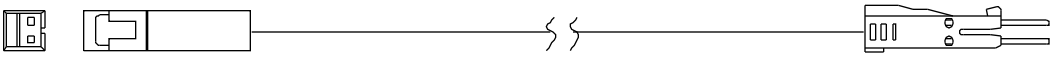 |
| 15237701 | 4-position Pin-to-Pigtail Wire Assembly<br>*Links each PEM to clock. (TCK FO>TCKM) (TMS FO>TMSMb)*<br> 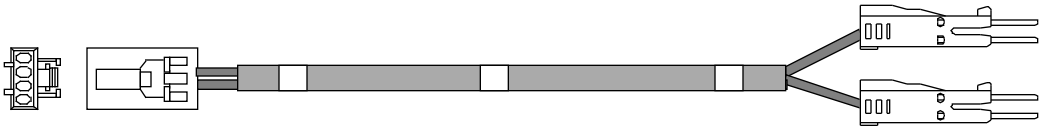 |
| 15237801 | 2-position Pin-to-Pigtail Cable Assembly<br>*Links scan master to scan chain. (TDIF[0]>TDIM)*<br> 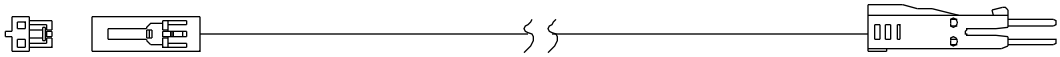 |
| 15224009<br><br>15223701 | Wire Assembly, 144 in.<br>*Links scan master to clock module. (TMSFb>TMS FO)*<br>Wire Assembly, 120 in.<br>*Internal Fanout (TCKC>TCK FO) (TCKS>TCK FO)*<br> 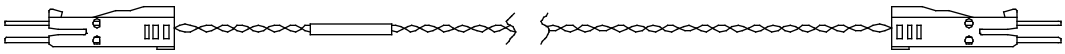 |

| GigaRing | |
|---|---|
| **Part Number** | **Description** |
| 15200500 | GigaRing Bulkhead Cable Assembly<br>*Connects PEM to the external GigaRing cable at the I/O bulkhead, or connects PEM to PEM via a loopback board.*<br> 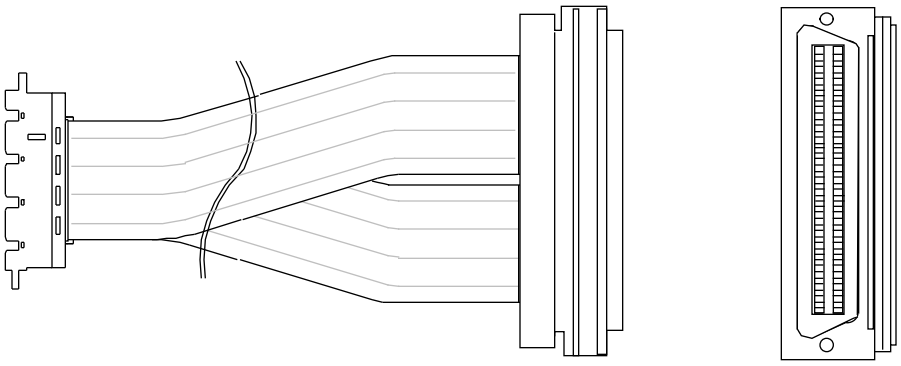 |
| 15255500 | Internal Loopback Board<br>*Links GigaRing cables internal to bulkhead.*<br> 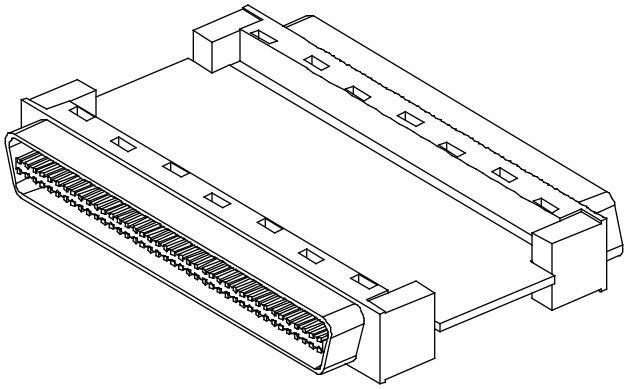 |

| Clock | |
|---|---|
| **Part Number** | **Description** |
| 57262000 | Clock-to-Select Cable Assembly<br>*Connects clock module to clock switches.*<br> 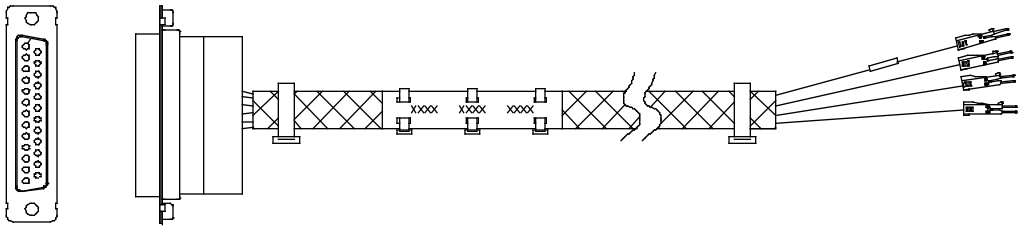 |
| 15244601 | Clock Shielded w/Drain Wire Assembly<br>*Master system clock*<br>*Synchronizes clock module 0 and clock module 1.*<br> 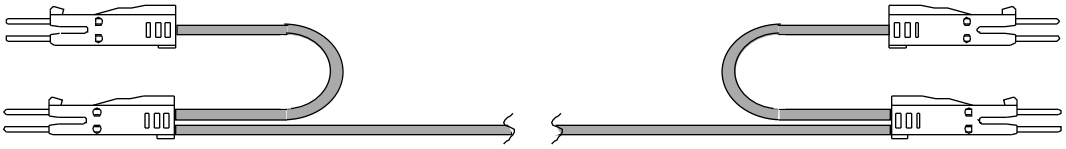 |
| 15223701 | Clock Wire Assembly<br>*System clock fanout to PEMs*<br> |
| 15224008 | Wire Assembly, 120 in.<br>*GigaRing clock fanout to PEMs*<br>*Synchronizes GigaRing clock between clock module 0 and clock module 1. (Y Side)*<br> 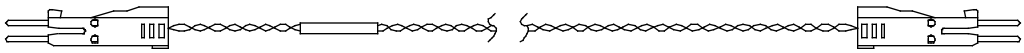 |

| WACS | |
|---|---|
| **Part Number** | **Description** |
| 57263800 | Clock-to-WACS Cable Assembly<br>*Connects the clock module to the WACS wire harness via a connection on the rear panel of the intake plenum. (Y side)*<br> 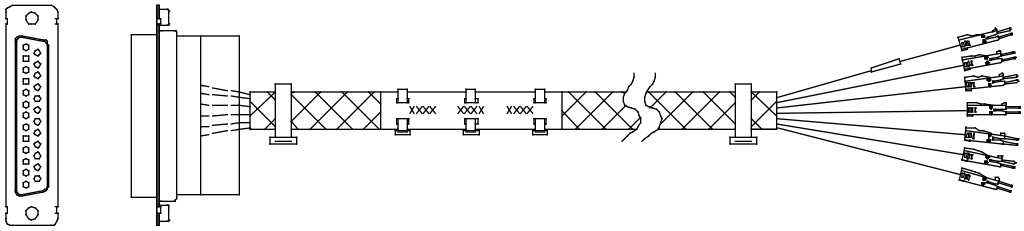 |
| 15214200 | PEM-to-WACS Cable Assembly<br>*Connects each PEM to the WACS wire harness.*<br> 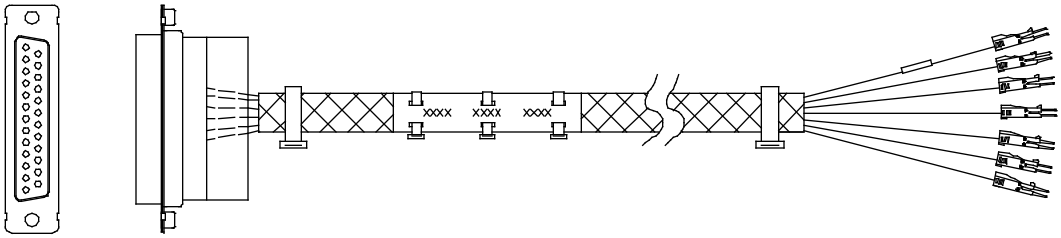 |
| 57244600 | AUI 12-ft. Cable Assembly<br>*WACS serial-port connection to the system workstation (SWS).*<br> 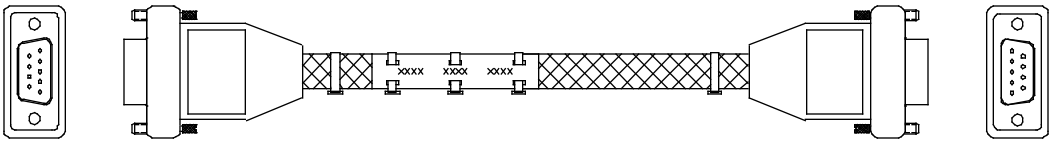 |