# *Overview*

## AT A GLANCE

AlphaStation XP1000 Linux-Ready Systems include:

- Tower enclosure Alpha 21264A (EV67) 667-MHz CPU with 64-KB data cache, 64-KB instruction cache, and 4-MB Level 2 cache
- Five Expansion slots on two buses: Two 64-bit PCI slots, two 32-bit PCI slots, one PCI/ISA 32-bit combination slot
- Two memory option banks, four DIMM slots per bank, maximum 2-GB memory
- Six Storage bays: One diskette drive bay, one CD-ROM drive bay, two 5.25″ x 1.6″ removable media bays, two 3.5″ x 1″ hard disk drive bays
- 400W power supply
- Onboard wide UltraSCSI adapter
- Onboard 16-bit Soundblaster compatible audio
- Onboard 10/100 Ethernet (Twisted pair); ThinWire and Thick wire optional
- Integrated I/O comprising parallel port, two serial ports, audio in, audio out, headphone, microphone, mouse, and keyboard ports
- 1.44 -MB diskette drive
- 650-MB 40X CD-ROM drive
- Protected by Compaq Services, including a three-year on-site limited warranty

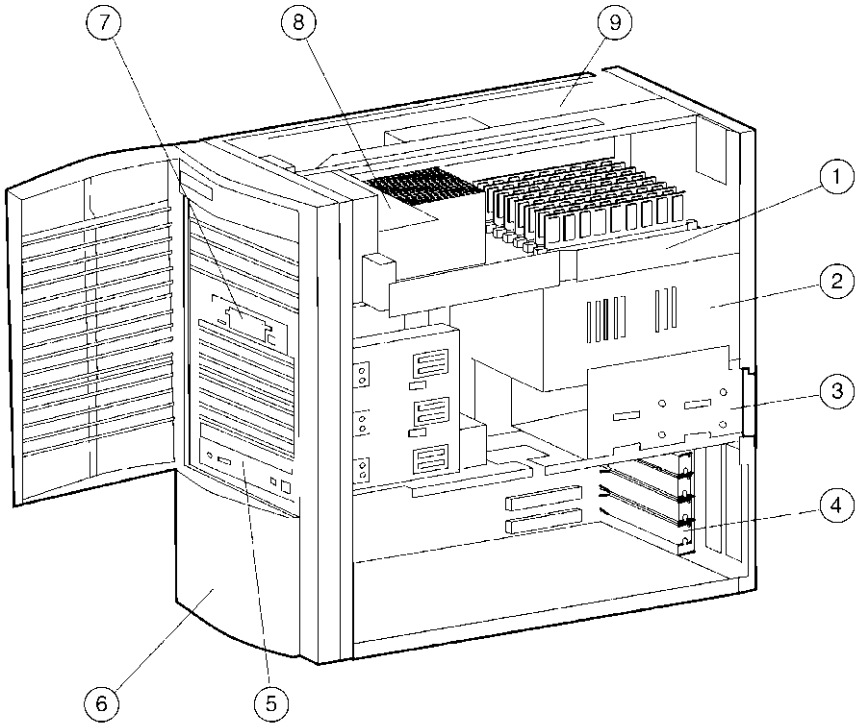


1. CPU and memory daughter-card latch
2. 400-watt auto-sensing power supply
3. Internal hard drive cage (hinged)
4. PCI and ISA expansion slots
5. 40X Max CD-ROM drive
6. Front bezel
7. 1.44-MB diskette drive
8. Fan pipe (directs air to CPU heatsink area)
9. Main logic board

## *Standard Features*

### Processor

Alpha 21264A (EV67) 667-MHz CPU

### Cache Memory

64-KB data cache, 64-KB instruction cache and 4-MB Level 2 cache

### Upgradability

500-MHz to 667-MHz CPU upgrade available

### Memory

| | |
|---|---|
| Standard | Mandatory for CTO systems |
| Maximum | 2 GB |

### Network Controller

Onboard 10/100 Fast Ethernet adapter

### Expansion Ports

| | |
|---|---|
| Parallel (25-pin) | 1 |
| Serial (9-pin) | 2 |
| Pointing device (mouse) P/S2 | 1 |
| Keyboard P/S2 | 1 |
| Microphone | 1 |
| Headphones/Audio-out | 1 |
| Audio-in | 1 |

### Expansion Slots

| | |
|---|---|
| I/O (total) | 5 |
| PCI | 2 (64-bit), 2 (32-bit) |
| Shared PCI/ISA | 1 |

### Storage Controller

Onboard Wide UltraSCSI adapter

### Storage

| | |
|---|---|
| Diskette Drive | 1.44 MB |
| CD-ROM | 650-MB 40X ATAPI CD-ROM Drive |
| Internal Hard Drives | Choice of 4.3-GB, 9.1-GB, 18.2-GB, 36.4-GB drives |
| Maximum Internal Storage | 72 GB |

### Manageability

Compaq Insight Manager

### Service and Support

Compaq Services provides a wide range of service offerings including a three-year limited warranty fully supported by a worldwide network of resellers and service providers; lifetime toll-free 7 x 24 hardware technical phone support.

**Note**: Additional Linux support and installation information is located at www.compaq.com/alphaserver/linux

## *Systems/Options*

### Step 1 – Select system

**Configure-to-order (CTO) Systems**

CTO systems require the **mandatory** selection of the following items:

- Minimum of 256-MB memory
- Hard disk drive
- Country Kit

Country-specific keyboard for CTO systems; keyboard is not mandatory but essential for full system operation

**Note**: Additional items in Steps 3 through 11 are optional and will be factory integrated when ordered with CTO systems.

| OS | CPU | Memory | Graphics | Hard Drive | Order No. |
|---|---|---|---|---|---|
| Linux-Ready | 667 MHz | Mandatory | Optional | Mandatory | SN-E2G6W-L2 |

### Step 2 – Country Kits

- Linux-Ready universal country kits include two country-specific power cords and mouse; multi-lingual user documentation is shipped with system kernel.
- Country kit required for system to be operational
- Bulk system orders must include country kits equal to the total number of systems ordered

| Country | FIS and Documentation, Language Supported | Country Kits |
|---|---|---|
| United States | English | SN-PBB0U-AA |
| Australia/New Zealand | English | SN-PBB0U-CN |
| Canada | French | SN-PBB0U-AC |
| Chinese | Simplified Chinese | SN-PBB0U-CV |
| Chinese/General Asia | English | SN-PBB0U-CA |
| Denmark | English | SN-PBB0U-AD |
| Finland | English | SN-PBB0U-AF |
| France, Belgium | French | SN-PBB0U-AP |
| General European | English | SN-PBB0U-EC |
| Germany | German | SN-PBB0U-AG |
| Italy | Italian | SN-PBB0U-AI |
| Japan | Japanese | SN-PBB0U-AJ |
| Japan | English | SN-PBB0U-CC |
| Netherlands | Dutch | SN-PBB0U-AH |
| Norway | English | SN-PBB0U-AN |
| Spain | Spanish | SN-PBB0U-AS |
| Sweden | English | SN-PBB0U-AM |
| Switzerland/English | English | SN-PBB0U-CH |
| Switzerland/French | French | SN-PBB0U-AK |
| Switzerland/Germany | German | SN-PBB0U-AL |
| Switzerland/Italian | Italian | SN-PBB0U-AW |
| United Kingdom | English | SN-PBB0U-AE |

# *Options*

## Step 3 – Keyboards

- CTO systems do not include keyboard. Selection of keyboard is not mandatory, but is essential for full system operation.
- Keyboards are colored to match CPU and monitor. Alternative keyboards purchased through distribution channels may not be the correct color matches.

| Country | |
|---|---|
| US/English | SN-LKQ47-AA |
| Arabic | SN-LKQ47-BR |
| Belgium | SN-LKQ47-AB |
| Bosnia, Herzegovina, Croatia, Serbia, Yugoslavia | SN-LKQ97-AX |
| Canada/French | SN-LKQ47-AC |
| China | SN-LKQ47-CV |
| Czech Republic | SN-LKQ47-BV |
| Denmark | SN-LKQ47-AD |
| Finland | SN-LKQ47-AF |
| France | SN-LKQ47-AP |
| German | SN-LKQ47-AG |
| Greece | SN-LKQ47-BH |
| Hebrew | SN-LKQ97-AT |
| Hungary | SN-LKQ47-BQ |
| International | SN-LKQ47-BA |
| Italy | SN-LKQ47-AI |
| Latin-American/Spanish | SN-LKQ47-AR |
| Netherlands | SN-LKQ47-AH |
| Norway | SN-LKQ47-AN |
| Poland | SN-LKQ47-BP |
| Portugal | SN-LKQ97-AV |
| Russia/Cyrillic | SN-LKQ47-BT |
| Slovak | SN-LKQ47-CZ |
| South Korean | SN-LKQ47-BK |
| Spain | SN-LKQ47-AS |
| Sweden | SN-LKQ47-AM |
| Switzerland/French | SN-LKQ47-AK |
| Taiwan | SN-LKQ47-BI |
| Thailand | SN-LKQ47-CB |
| Turkey | SN-LKQ47-BU |
| United Kingdom | SN-LKQ47-AE |

## Step 4 – Memory

- Selection of a minimum of 256-MB memory is mandatory for CTO systems
- Systems support a maximum of 2-GB memory (two memory banks support four DIMMs per bank)

| | |
|---|---|
| 256-MB ECC memory DIMMs (4 x 64-MB DIMMs) | SN-MSP01-KB |
| 512-MB ECC memory DIMMs (4 x 128-MB DIMMs) | SN-MSP01-KC |
| 1024-MB ECC memory DIMMs (4 x 256-MB DIMMs) | SN-MSP01-KD |

# *Options*

## Step 5 – Storage

- All systems include onboard UltraSCSI adapter for internal drives only.

**Step 5a -- Internal Storage**

**SCSI Controller**

| | |
|---|---|
| PCI dual-channel PCI-to-UltraSCSI adapter (uses one PCI slot); maximum two per system | KZPCM-DA |

**Disk Drives**

- CTO systems require one mandatory hard disk drive
- Systems support up to four hard disk drives:
  - Two 3.5-inch x 1″ hard disk drives in internal bays.
  - Two 3.5-inch x 1.6″ or 1″ hard disk drives supported in the 5.25″ removable media bays

| | |
|---|---|
| 4.3-GB Ultra2 LVD Wide SCSI 10K rpm 1″ hard disk drive | SN-PBXRW-RB |
| 9.1-GB Ultra2 LVD Wide SCSI 7200 rpm 1″ hard disk drive | SN-PBXRW-SC |
| 9.1-GB Ultra3 LVD Wide SCSI 10K rpm 1″ hard disk drive | SN-PBXRW-VB |
| 18.2-GB Ultra2 LVD Wide SCSI 7200 rpm 1” hard disk drive | SN-PBXRW-TB |
| 18.2-GB Ultra3 LVD Wide SCSI 10K rpm 1″ hard disk drive | SN-PBXRW-WC |
| 18.2-GB Ultra2 LVD Wide SCSI 7200 rpm 1″ hard disk drive | SN-PBXRW-VB |
| 36.4-GB Ultra3 LVD Wide SCSI 10K rpm 1″ hard disk drive | SN-PBXRW-XB |

**Step 5b – External Storage**

- UltraSCSI configurations require UltraSCSI components (controllers, adapters, shelves, disks, and cables)

**UltraSCSI StorageWorks Pedestals**

- UltraSCSI top gun blue pedestals provide support for UltraSCSI disk drives; pedestal is available in single-bus or split-bus configurations and includes a personality module and 180W power supply
- UltraSCSI shelf supports: seven 3.5″ hard disk drives, or one 5.25″ device and four 3.5″ hard disk drives, or two 5.25″ devices and one 3.5″ hard disk drive
- Installation of redundant power supply reduces number of 3.5″ drive slots by one

| | |
|---|---|
| UltraSCSI single-ended pedestal, single-bus personality module, 180W power supply | DS-BA356-KF |
| UltraSCSI single-ended pedestal, split-bus personality module, 180W power supply | DS-BA356-KG |
| UltraSCSI pedestal, single-channel differential personality module, 180W power supply | DS-BA356-KH |
| 180W power supply, includes 120V North American and 240V IEC power cord | CK-BA35X-HH |

**Storage Controllers for External StorageWorks Shelves**

**Note:** The following controllers are only supported with StorageWorks shelves (not supported with the 3X-BA611-4D disk drive cage).

| | |
|---|---|
| PCI 2-port UltraSCSI single-ended adapter and 10/100 Mbit Ethernet combo adapter (uses one PCI slot); includes internal 68-pin and 50-pin HD connectors and two external 68-pin VHDCI SCSI connectors, maximum one per system | KZPCM-DA |
| VHDCI male-to-VHDCI male UltraSCSI cable; required for each external UltraSCSI shelf attached to KZPCM, xx = 02, 2E [2.5], 02, 05, 10, 20 m | BN37A-xx |
| PCI 1-port UltraSCSI single-ended adapter (uses one PCI slot); includes internal 68-pin and 50-pin HD connectors and external 68-pin HD connector, maximum one per system; requires BN38C cable (2 to 20 m) to connect to single-ended UltraSCSI shelf | KZPBA-CA |
| PCI 1-port UltraSCSI differential adapter (uses one PCI slot); includes external 68-pin HD connector, maximum one per system; requires BN38C cable (2 to 25 m) to connect to differential UltraSCSI shelf or external RAID array controller | KZPBA-CB |
| 68-pin HD male-to-VHDCI male UltraSCSI cable; required for each external UltraSCSI shelf attached to KZPBA-CA/CB adapter, xx = 02, 03, 05, 10, 20, 25 m | BN38C-xx |
| 1-channel Ultra2 SCSI RAID controller, 4-MB cache, maximum four per system | SN-KZPBC-AA |

**StorageWorks Shelf**

- Selection of StorageWorks shelf requires selection of UltraSCSI adapter and SCSI cable

| | |
|---|---|
| StorageWorks UltraSCSI single-bus shelf kit | BA36R-RC |
| StorageWorks UltraSCSI split-bus shelf kit | BA36R-RD |

# *Options*

## Step 5 – Storage *(continued)*

**System Disk Drives (Supported in StorageWorks Shelf)**

| | |
|---|---|
| 9.1-GB 7,200 rpm UltraSCSI drive | DS-RZ1DA-VW |
| 9.1-GB 10,000 rpm UltraSCSI drive | DS-RZ1DD-VW |
| 18.2-GB 7,200 rpm UltraSCSI drive | DS-RZ1EA-VW |
| 18.2-GB 10,000 rpm UltraSCSI drive | DS-RZ1ED-VW |
| 36.4-GB 10,000 rpm UltraSCSI drive | DS-RZ1FC-VW |

**Removable Media Device for External StorageWorks Shelves**

| | |
|---|---|
| 600-MB 32X CD-ROM drive in StorageWorks carrier | DS-RRD47-VA |

**Expansion Boxes and SCSI Cables**

| | |
|---|---|
| External StorageWorks expansion box with 14 drive slots for 1" universal Ultra2 SCSI drives, rackmounted with redundant power supplies, dual SCSI bus, I/O module, US power cord, two 12' VHDCI-to-VHDCI cables<br>**Note**: For SCSI drive information refer to the Compaq SCSI hard drive compatibility table at http://www.compaq.com/storage/index.html and http://www.compaq.com/products/storageworks/hddu2nonplug/u2nonplugindex.html | DS-SSL14-RS |
| External StorageWorks deskside pedestal unit with 180W power supply, dual-speed blowers, UltraSCSI I/O personality module; configured for single bus | DS-BA356-KF |
| VHDCI male-to-68-pin HD male SCSI cable; required to connect external StorageWorks UltraSCSI pedestal to SN-KZPBA-CA/CB and SN-KZPCA-AA adapters<br>xx = -01 meter length, up to –020, 20 meter lengths | BN38C-xx |
| VHDCI male-to-VHDCI male SCSI cable; required to connect external StorageWorks UltraSCSI pedestal to SN-KZPAC-AA/CA controller<br>xx = -01 meter length, up to –025, 25 meter lengths | BN37A-xx |

## Step 6 – Graphics

- System consists of two PCI buses – three PCI slots on Bus 0 and two PCI slots on Bus 1
- For optimal graphics performance, all graphics adapters should be installed on Bus 0; there will be a loss of performance on any adapter placed on PCI Bus 1
- First graphics adapter for single head systems must be installed on PCI Bus 0
- Multi-head systems must be homogeneous – all ELSA Gloria Synergy
- Linux customers should refer to their Linux supplier for graphic adapter support

| | |
|---|---|
| ELSA Gloria Synergy graphics with 8-MB SGRAM, TruColor at 1280 x 1024, maximum two per system | SN-PBXGK-BB |

## Step 7 – Color Monitors

- Country Kit includes two country-specific power cords, one for system and one for monitor

| | |
|---|---|
| P700 Monitor – 17″ (16″ viewable image size) professional series auto-scanning color monitor, flat definition Trinitron CRT, 0.25mm aperture grill pitch, VGA to 1280 x 1024 @t 75 Hz, TCO-99, MPR-II, Energy Star, attached 1.8-m video cable; without power cord, Northern Hemisphere | 3R-VRQP7-24 |
| Same as above, Southern Hemisphere | 3R-VRQP7-23 |
| P900 Monitor – 19″ (18″ viewable image size) professional series auto-scanning color monitor, flat definition Trinitron CRT, 0.25mm aperture grill pitch, VGA to 1280 x 1024 @ 75 Hz, TCO-99, MPR-II, Energy Star, attached 1.8-m video cable; without power cord, Northern Hemisphere | 3R-VRQP9-24 |
| Same as above, Southern Hemisphere | 3R-VRQP9-23 |
| P1100 Monitor – 21″ (19.6″ viewable image size) auto-scanning color monitor, Trinitron CRT, 0.28 mm aperture grill pitch, VGA to 1600 x 1200 @ 85 Hz NI, TCO-99, Energy Star, includes 1.8-m video cable; without power cord, Northern Hemisphere | 3R-VRQP1-24 |
| Same as above, Southern Hemisphere | 3R-VRQP1-23 |

# *Options*

## Step 7 – Color Monitors *(continued)*

| | |
|---|---|
| TFT 18″ Panel Monitor – 18″ viewable image size, TFT diagonal viewable image area; support for a maximum 1280 x 1024 display resolution @ 75 Hz; 160 degree horizontal and vertical viewing angles; removable base; pixel pitch of 0.28mm; brightness of 200 nits (typical); LiteSaver that conserves energy and backlight life | 3R-A0852-AA |
| S510 Monitor – 15" (13.8" viewable image size) multiple-scan color monitor with Invar Shadow Mask, VGA to 1024 x 768 at 75 Hz, 0.28mm AG, MPR II, Northern Hemisphere with NA power cord | 3R-A1741-AA |
| Same as above with Eurocord | 3R-A2832-AA |
| Same as above, APD, no power cord | 3R-VRQS5-24 |
| P710 Monitor – 17" (16" viewable image size) auto-scanning color monitor, Diamondtron NF, 0.25mm aperture grille pitch, VGA to 1280 x 1024 at 75 Hz, TCO-99, Northern Hemisphere with NA power cord | 3R-A2936-AA |
| Same as above, APD, no power cord | 3R-A2260-AA |
| Same as above, Northern Hemisphere, with power factor correction and Eurocord, 220V only | 3R-A2261-AA |
| P910 Monitor – 19" (18" viewable image size) auto-scanning color monitor, Diamondtron NF, 0.25mm aperture grille pitch, VGA to 1280 x 1024 @ 85 Hz, TCO-99, Northern Hemisphere with NA power cord | 3R-A2935-AA |
| Same as above, Northern Hemisphere with power factor correction and Eurocord, 220V | 3R-A2265-AA |
| P1210 Monitor – 22" (20" viewable image size) auto-scanning color monitor, Diamondtron NF, 0.24mm aperture grille pitch, VGA to 1600 x 1200 @ 85 Hz, TCO-99, Northern Hemisphere with power factor correction and NA power cord | 3R-A2934-AA |
| Same as above with Eurocord | 3R-VRQP2-24 |
| Same as above, APD, no power cord | 3R-A2268-AA |

**Video Cable**

- Each monitor includes a 1.8-m signal cable – a video cable is required for most server applications

| | |
|---|---|
| 1.8-m video cable | BN39C-02 |

**Monitor Power Cords**

| | |
|---|---|
| North American, 120V, 75″ | BN26J-1K |
| Australia, New Zealand, 2.5m | BN19H-2E |
| Central Europe, 2.5m | BN19C-2E |
| Denmark, 2.5m | BN19K-2E |
| Egypt, India, South Africa, 2.5m | BN19S-2E |
| Israel, 2.5m | BN18L-2E |
| Italy, 2.5m | BN19M-2E |
| Japan, 2.5m | 3X-BN46F-02 |
| Switzerland, 2.5m | BN19E-2E |
| UK, Ireland, 2.5m | BN19A-2E |

## Step 8 – Network Options

- Systems include onboard 10/100 Ethernet (Twisted pair) controller

| | |
|---|---|
| XP1 MAU 10Base5 AUI/Thickwire, maximum two per system | SN-PCXAN-DE |
| XP1 MAU Card 10Base2 ThinWire, maximum two per system | SN-PCXAN-DF |

# *Options*

## Step 9 – AlphaStation XP1000 Rackmount Options

**M-Series Rackmount Kit**

- Rackmount kit must be ordered separately – requires removal of XP1000 front door

AlphaStation XP1000 M-Series rackmount shelf kit; includes front panel bezel assembly — SN-BA26R-RA

**M-Series Cabinets and Accessories**

M-series enclosures require the mandatory selection of the following items:

- H9A11, H9A10, or H9A15 cabinet, 120V or 240V
- Cabinet front door based on cabinet height (optional on H9A11 cabinet)
- Factory Integration
- Ballast kits as required

**M-Series Cabinet Configuration Chart for AlphaStation XP1000 (5U) with Storage Works shelves (4U)**

| Cabinet | Mounting Kit | Cabinet Height / Space | System | Shelves | Ballast Kit |
|---|---|---|---|---|---|
| H9A11-MC/MD | SN-BA26R-RA – Optional, must be ordered separately | 35″ / 20U | 1 | 3 | 1 |
| | | | 2 | 2 | 0 |
| | | | | 1 | 0 |
| | | | 4 | 0 | 0 |
| H9A10-MC/MD | SN-BA26R-RA – Optional, must be ordered separately | 54.2″ / 31U | 1 | 6 | 2 |
| | | | 2 | 5 | 1 |
| | | | 3 | 4 | 0 |
| | | | 4 | 2 | 0 |
| | | | 5 | 1 | 0 |
| | | | 6 | 0 | 0 |
| H9A15-MC/MD | SN-BA26R-RA – Optional, must be ordered separately | 66.5″ / 38U | 1 | 6 | 2 |
| | | | 1 | 6 | 2 |
| | | | 3 | 5 | 0 |
| | | | 4 | 4 | 0 |
| | | | 5 | 3 | 0 |
| | | | 6 | 2 | 0 |
| | | | 7 | 0 | 0 |

**M-series Cabinets**

43" cabinet enclosure with 35" or 20U of usable vertical space; 120V 24A controller with 10 NEMA 5-15R outlets, input power plug NEMA L5-30P, Americas, Asia Pacific; includes rear door, H7600-AA power distribution unit, trim kit, and front filler bezel kit — H9A11-MC

43" cabinet enclosure with 35" or 20U of usable vertical space; 240V 16A controller with 12 IEC C13 outlets, input power plug IEC 309, 16A, Europe; includes rear door, H7600-DB power distribution unit, trim kit, and front filler bezel kit — H9A11-MD

67" cabinet enclosure with 54.2" or 33U of usable vertical space; 120V dual-24A controller, each with 10 NEMA 5-15R outlets, input power plug NEMA L5-30P, Americas, Asia Pacific; includes rear door, top fan tray, and two H7600-AA power distribution units — H9A10-MC

67" cabinet enclosure with 54.2" or 33U of usable vertical space; 240V dual-16 A controller, each with 12 IEC C13 outlets, input power plug IEC 309, 16A, Europe; includes rear door, top fan tray, and two H7600-DB power distribution units — H9A10-MD

79" cabinet enclosure with 66.5" or 40U of usable vertical space; 120V dual-24A controller, each with 10 NEMA 5-15R outlets, input power plug NEMA L5-30P, Americas, Asia Pacific; includes rear door, top fan tray, and two H7600-AA power distribution units — H9A15-MC

79" cabinet enclosure with 66.5" or 40U of usable vertical space; 240V dual-16A controller, each with 12 IEC C13 outlets, input power plug IEC 309, 16A, Europe; includes rear door, top fan tray, and two H7600-DB power distribution units — H9A15-MD

**Note:** For more information on M-series Cabinet Enclosures: http://www.compaq.com/alphaserver/products/m-series/index.html

# *Options*

## Step 9 – AlphaStation XP1000 Rackmount Options *(continued)*

**Cabinet Front Door**

| | |
|---|---|
| Top gun blue front door for H9A10-MC/MD cabinet | H9C10-TF |
| Top gun blue front door for H9A15-MC/MD cabinet | H9C15-TF |
| Top gun blue front door for H9A11-MC/MD cabinet; selection of front door for H9A11 is optional, cabinet includes front trim kit and filler bezel | H9C11-EB |

**Shelves supported in M-series Cabinets with front doors (H9A10/M9A15)**

| | |
|---|---|
| StorageWorks UltraSCSI single bus, single-ended shelf with 180W power supply and RETMA mounting kit | BA36R-RC |
| StorageWorks UltraSCSI split bus, single-ended shelf with 180W power supply and RETMA mounting kit | BA36R-RD |
| StorageWorks controller shelf with RETMA mounting kit and NEMA power for H9A10-MC, H9A15-MC cabinets (Americas, Asia Pacific); order BN30B-02 power cord for H9A10-MD, H9A15-MD cabinets (Europe) | BA35R-MR |
| 180W power supply | CK-BA35X-HH |

**Shelves supported in M-series Cabinets with Trim Kit** (H9A11)

| | |
|---|---|
| StorageWorks UltraSCSI single bus, single-ended shelf with 180W power supply and RETMA mounting kit, blue bezel | BA35C-AA |
| StorageWorks UltraSCSI split bus, single-ended shelf with 180W power supply and RETMA mounting kit, blue bezel | BA35C-BA |

**Factory Integration**

| | |
|---|---|
| Factory Integration of systems and storage devices assembled and configured in cabinet enclosure for H9A10/15 cabinet enclosures | YS-ASCAA-AA |
| Factory Integration of systems and storage devices assembled and configured in cabinet enclosure for H9A11 cabinet enclosures | YS-ASCAA-AB |

**Ballast Kit**

- Ballast is dead weight added to a cabinet at specific locations for specific configurations to meet safety regulations for installation, operation, and service; see “Cabinet Configuration Chart” for ballast kit requirements

| | |
|---|---|
| Two 35-40 lb steel plates | H9C10-MC |

**Rackmount Power Cords**

| | |
|---|---|
| North America, 4.5 m | BN20Z-4E |
| Non-North America, 4.5 m | 3X-BN46L-4E |
| Japan, Dentori approved, 4.5 m | 3X-BN46D-4E |

**Compaq *Custom*Systems Support**

- Cabinets containing systems and storage must be assembled by qualified assemblers: Compaq Manufacturing, Compaq *Custom*Systems Group, or an authorized Compaq Certified Integration Partner
- For custom integration of systems, options, and additional Compaq and third-party devices, or for other cabinets, doors, and trim kits of a different color, contact Compaq *Custom*Systems at 1-800-AT-COMPAQ (1-800-282-6672), or contact your local authorized Compaq Certified Integration Partner

## Step 10 – XP1000 Field Upgrade Option

| | |
|---|---|
| XP1000 500-MHz CPU upgrade to XP1000 667-MHz CPU for Tru64 UNIX, OpenVMS, and Linux-Ready systems | SN-E2G6W-UG |

# *Options*

## Step 11 – Hardware Supplemental Services

| Hardware Supplemental Services | |
|---|---|
| 3-year 5 x 9 Next Business Day Onsite XP1000/667 warranty uplift (must purchase within 90 days of system purchase) | FM-AWXHW-36 |
| 3-year 5 x 9 Same Day – 4-hour Response Onsite XP1000/667 warranty uplift (must purchase within 90 days of system purchase) | FM-AW4HR-36 |
| 3-year 7 x 24 Same Day – 4-hour Response Onsite XP1000/667 warranty uplift (must purchase within 90 days of system purchase) | FM-AW724-36 |
| In Warranty XP1000/667 service upgrade for 1st year to 5x9 Next Business Day | FS-CPQ05-WJ |
| In Warranty XP1000/667 service upgrade for 2nd or 3rd years to 5x9 Next Business Day | FS-CPQ05-WK |
| Post Warranty XP1000/667 service – 5 x 9 Next Business Day | FS-CPQ05-35 |
| XP1000/667 Hardware Installation | FM-AWINS-IN |

## Step 12 – User Documentation

| | |
|---|---|
| Compaq AlphaStation XP1000 Installation and Setup Guide in seven languages: English, French, German, Japanese, Spanish, Italian, Dutch | EK-XP100-SI |
| XP1000 Service Guide (CD-ROM) | QA-6G3AA-G8 |

# Technical Specifications

**System Unit**

| | |
|---|---|
| **Dimensions** (HxWxD) | |
| Deskside Cabinet | 16 x 8.6 x 17.5 in/41 x 22 x 44.8 cm |
| Shipping Carton | 23.4 x 20.5 x 15.4 in/59.4 x 52.1 x 39 cm |
| **Weight** | |
| With drive cage and one hard drive installed | 41 lbs/18.6 kg |
| Shipping weight | 49 lbs/22.2 kg |
| **Power Supply, Auto Ranging** | |
| Nominal Range | 100-132 VAC/230 VAC |
| Operating Range | 90-132 VAC/180-264 VAC |
| Nominal Frequency | 60 Hz/60 Hz |
| Operating Frequency | 47 to 63 Hz |
| Maximum Input Current | 100-120 range 6.5 arms/200-240 range 3.3 arms |
| **Temperature Range** | |
| Operating | 50° to 104°F/10° to 40°C |
| Non-operating | –40° to 151°F/–40° to 66°C |
| **Relative Humidity** (non-condensing) | |
| Operating | 20% to 80% |
| Non-operating | 10% to 90% |
| **Maximum Altitude** (non-pressurized) | |
| Operating | 10,000 ft/3,048 m |
| Non-operating | 40,000 ft/12,192 m |
| **Power Consumption** | |
| Typical | 215 W/733 Btu/hr |