# *Overview*

## AT A GLANCE

AlphaStation XP1000 Linux-Ready Systems include:

- Tower enclosure Alpha 21264A (EV67) 667-MHz CPU with 64-KB data cache, 64-KB instruction cache, and 4-MB Level 2 cache
- Five Expansion slots on two buses: Two 64-bit PCI slots, two 32-bit PCI slots, one PCI/ISA 32-bit combination slot
- Two memory option banks, four DIMM slots per bank, maximum 2-GB memory
- Six Storage bays: One diskette drive bay, one CD-ROM drive bay, two 5.25 in x 1.6 in (133.35 mm) removable media bays, two 3.5 in x 1 in (88.9 mm x 25.4 mm) hard disk drive bays
- 400W power supply
- Onboard wide UltraSCSI adapter
- Onboard 16-bit Soundblaster compatible audio
- Onboard 10/100 Ethernet (Twisted pair); ThinWire and Thick wire optional
- Integrated I/O comprising parallel port, two serial ports, audio in, audio out, headphone, microphone, mouse, and keyboard ports
- 1.44 -MB diskette drive
- 650-MB 40X CD-ROM drive
- Protected by Compaq Services, including a three-year on-site limited warranty – Certain restrictions and exclusions apply. Consult the Compaq Customer Support Center for details. In Canada, consult the Product Information Centre at 1-888-88-COMPAQ.

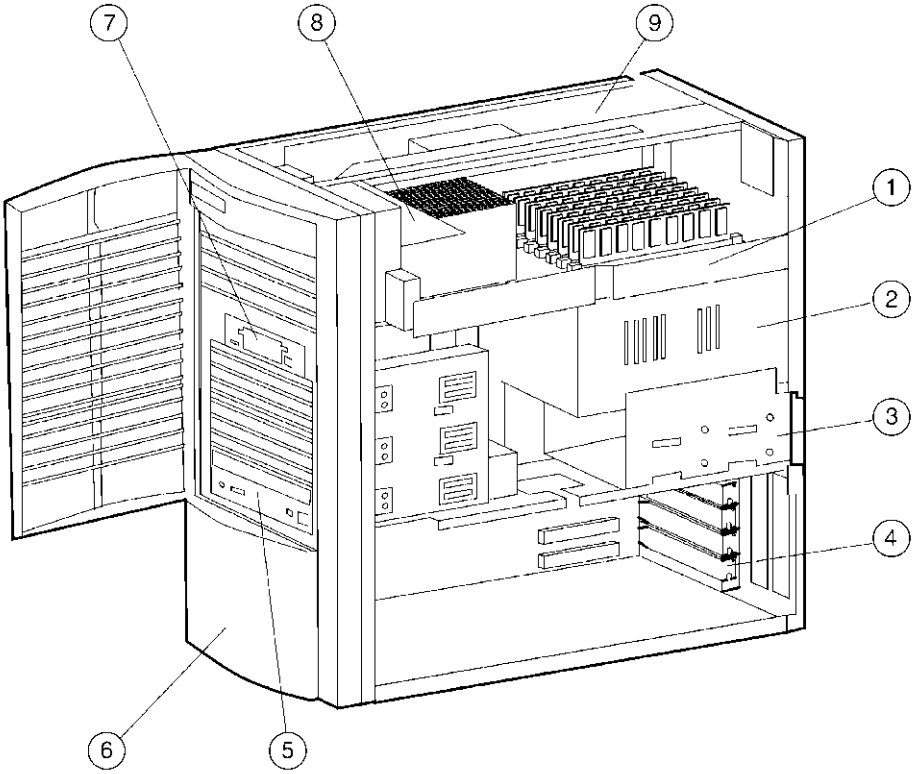


1. CPU and memory daughter-card latch
2. 400-watt auto-sensing power supply
3. Internal hard drive cage (hinged)
4. PCI and ISA expansion slots
5. 40X Max CD-ROM drive
6. Front bezel
7. 1.44-MB diskette drive
8. Fan pipe (directs air to CPU heatsink area)
9. Main logic board

## *Standard Features*

### Processor

Alpha 21264A (EV67) 667-MHz CPU

### Cache Memory

64-KB data cache, 64-KB instruction cache and 4-MB Level 2 cache

### Upgradability

500-MHz to 667-MHz CPU upgrade available

### Memory

| | |
|---|---|
| Standard | Mandatory for CTO systems |
| Maximum | 2 GB |

### Network Controller

Onboard 10/100 Fast Ethernet adapter

### Expansion Ports

| | |
|---|---|
| Parallel (25-pin) | 1 |
| Serial (9-pin) | 2 |
| Pointing device (mouse) P/S2 | 1 |
| Keyboard P/S2 | 1 |
| Microphone | 1 |
| Headphones/Audio-out | 1 |
| Audio-in | 1 |

### Expansion Slots

| | |
|---|---|
| I/O (total) | 5 |
| PCI | 2 (64-bit), 2 (32-bit) |
| Shared PCI/ISA | 1 |

### Storage Controller

Onboard Wide UltraSCSI adapter

### Storage

| | |
|---|---|
| Diskette Drive | 1.44 MB |
| CD-ROM | 650-MB 40X ATAPI CD-ROM Drive |
| Internal Hard Drives | Choice of 4.3-GB, 9.1-GB, 18.2-GB, 36.4-GB drives |
| Maximum Internal Storage | 72 GB |

### Manageability

Compaq Insight Manager

### Service and Support

Compaq Services provides a wide range of service offerings including a three-year limited warranty fully supported by a worldwide network of resellers and service providers; lifetime toll-free 7 x 24 hardware technical phone support.

**Note**: Additional Linux support and installation information is located at www.compaq.com/alphaserver/linux Certain restrictions and exclusions apply. Consult the Compaq Customer Support Center for details. In Canada, consult the Product Information Centre at 1-888-88-COMPAQ.

## *Systems/Options*

### Step 1 – Select system

**Configure-to-order (CTO) Systems**

CTO systems require the **mandatory** selection of the following items:

- Minimum of 256-MB memory
- Hard disk drive
- Country Kit

Country-specific keyboard for CTO systems; keyboard is not mandatory but essential for full system operation

**Note**: Additional items in Steps 3 through 11 are optional and will be factory integrated when ordered with CTO systems.

| OS | CPU | Memory | Graphics | Hard Drive | Order No. |
|---|---|---|---|---|---|
| Linux-Ready | 667 MHz | Mandatory | Optional | Mandatory | SN-E2G6W-L2 |

### Step 2 – Country Kits

- Linux-Ready universal country kits include two country-specific power cords and mouse; multi-lingual user documentation is shipped with system kernel.
- Country kit required for system to be operational
- Bulk system orders must include country kits equal to the total number of systems ordered

| Country | FIS and Documentation, Language Supported | Country Kits |
|---|---|---|
| United States | English | SN-PBB0U-AA |
| Australia/New Zealand | English | SN-PBB0U-CN |
| Canada | French | SN-PBB0U-AC |
| Chinese | Simplified Chinese | SN-PBB0U-CV |
| Chinese/General Asia | English | SN-PBB0U-CA |
| Denmark | English | SN-PBB0U-AD |
| Finland | English | SN-PBB0U-AF |
| France, Belgium | French | SN-PBB0U-AP |
| General European | English | SN-PBB0U-EC |
| Germany | German | SN-PBB0U-AG |
| Italy | Italian | SN-PBB0U-AI |
| Japan | Japanese | SN-PBB0U-AJ |
| Japan | English | SN-PBB0U-CC |
| Netherlands | Dutch | SN-PBB0U-AH |
| Norway | English | SN-PBB0U-AN |
| Spain | Spanish | SN-PBB0U-AS |
| Sweden | English | SN-PBB0U-AM |
| Switzerland/English | English | SN-PBB0U-CH |
| Switzerland/French | French | SN-PBB0U-AK |
| Switzerland/Germany | German | SN-PBB0U-AL |
| Switzerland/Italian | Italian | SN-PBB0U-AW |
| United Kingdom | English | SN-PBB0U-AE |

# *Options*

## Step 3 – Keyboards

- CTO systems do not include keyboard. Selection of keyboard is not mandatory, but is essential for full system operation.
- Keyboards are coloured to match CPU and monitor. Alternative keyboards purchased through distribution channels may not be the correct colour matches.

| Country | |
|---|---|
| US/English | SN-LKQ47-AA |
| Arabic | SN-LKQ47-BR |
| Belgium | SN-LKQ47-AB |
| Bosnia, Herzegovina, Croatia, Serbia, Yugoslavia | SN-LKQ97-AX |
| Canada/French | SN-LKQ47-AC |
| China | SN-LKQ47-CV |
| Czech Republic | SN-LKQ47-BV |
| Denmark | SN-LKQ47-AD |
| Finland | SN-LKQ47-AF |
| France | SN-LKQ47-AP |
| German | SN-LKQ47-AG |
| Greece | SN-LKQ47-BH |
| Hebrew | SN-LKQ97-AT |
| Hungary | SN-LKQ47-BQ |
| International | SN-LKQ47-BA |
| Italy | SN-LKQ47-AI |
| Latin-American/Spanish | SN-LKQ47-AR |
| Netherlands | SN-LKQ47-AH |
| Norway | SN-LKQ47-AN |
| Poland | SN-LKQ47-BP |
| Portugal | SN-LKQ97-AV |
| Russia/Cyrillic | SN-LKQ47-BT |
| Slovak | SN-LKQ47-CZ |
| South Korean | SN-LKQ47-BK |
| Spain | SN-LKQ47-AS |
| Sweden | SN-LKQ47-AM |
| Switzerland/French | SN-LKQ47-AK |
| Taiwan | SN-LKQ47-BI |
| Thailand | SN-LKQ47-CB |
| Turkey | SN-LKQ47-BU |
| United Kingdom | SN-LKQ47-AE |

## Step 4 – Memory

- Selection of a minimum of 256-MB memory is mandatory for CTO systems
- Systems support a maximum of 2-GB memory (two memory banks support four DIMMs per bank)

| | |
|---|---|
| 256-MB ECC memory DIMMs (4 x 64-MB DIMMs) | SN-MSP01-KB |
| 512-MB ECC memory DIMMs (4 x 128-MB DIMMs) | SN-MSP01-KC |
| 1024-MB ECC memory DIMMs (4 x 256-MB DIMMs) | SN-MSP01-KD |

# *Options*

## Step 5 – Storage

- All systems include onboard UltraSCSI adapter for internal drives only.

**Step 5a -- Internal Storage**

**SCSI Controller**

| | |
|---|---|
| PCI dual-channel PCI-to-UltraSCSI adapter (uses one PCI slot); maximum two per system | KZPCM-DA |

**Disk Drives**

- CTO systems require one mandatory hard disk drive
- Systems support up to four hard disk drives:
  - Two 3.5-inch (88.9 mm) x 1 in (25.4 mm) hard disk drives in internal bays.
  - Two 3.5-inch (88.9 mm) x 1.6 in (40.64 mm) or 1 in (25.4 mm) hard disk drives supported in the 5.25 in (133.35 mm) removable media bays

| | |
|---|---|
| 4.3-GB Ultra2 LVD Wide SCSI 10K rpm 1 in (25.4 mm) hard disk drive | SN-PBXRW-RB |
| 9.1-GB Ultra2 LVD Wide SCSI 7200 rpm 1 in (25.4 mm) hard disk drive | SN-PBXRW-SC |
| 9.1-GB Ultra3 LVD Wide SCSI 10K rpm 1 in (25.4 mm) hard disk drive | SN-PBXRW-VB |
| 18.2-GB Ultra2 LVD Wide SCSI 7200 rpm 1 in (25.4 mm) hard disk drive | SN-PBXRW-TB |
| 18.2-GB Ultra3 LVD Wide SCSI 10K rpm 1 in (25.4 mm) hard disk drive | SN-PBXRW-WC |
| 18.2-GB Ultra2 LVD Wide SCSI 7200 rpm 1 in (25.4 mm) hard disk drive | SN-PBXRW-VB |
| 36.4-GB Ultra3 LVD Wide SCSI 10K rpm 1 in (25.4 mm) hard disk drive | SN-PBXRW-XB |

**Step 5b – External Storage**

- UltraSCSI configurations require UltraSCSI components (controllers, adapters, shelves, disks, and cables)

**UltraSCSI StorageWorks Pedestals**

- UltraSCSI top gun blue pedestals provide support for UltraSCSI disk drives; pedestal is available in single-bus or split-bus configurations and includes a personality module and 180W power supply
- UltraSCSI shelf supports: seven 3.5 in (88.9 mm) hard disk drives, or one 5.25 in (133.35 mm) device and four 3.5 in (88.9 mm) hard disk drives, or two 5.25 in (133.35 mm) devices and one 3.5 in (88.9 mm) hard disk drive
- Installation of redundant power supply reduces number of 3.5 in (88.9 mm) drive slots by one

| | |
|---|---|
| UltraSCSI single-ended pedestal, single-bus personality module, 180W power supply | DS-BA356-KF |
| UltraSCSI single-ended pedestal, split-bus personality module, 180W power supply | DS-BA356-KG |
| UltraSCSI pedestal, single-channel differential personality module, 180W power supply | DS-BA356-KH |
| 180W power supply, includes 120V North American and 240V IEC power cord | CK-BA35X-HH |

**Storage Controllers for External StorageWorks Shelves**

**Note:** The following controllers are only supported with StorageWorks shelves (not supported with the 3X-BA611-4D disk drive cage).

| | |
|---|---|
| PCI 2-port UltraSCSI single-ended adapter and 10/100 Mbit Ethernet combo adapter (uses one PCI slot); includes internal 68-pin and 50-pin HD connectors and two external 68-pin VHDCI SCSI connectors, maximum one per system | KZPCM-DA |
| VHDCI male-to-VHDCI male UltraSCSI cable; required for each external UltraSCSI shelf attached to KZPCM, xx = 02, 2E [2.5], 02, 05, 10, 20 m | BN37A-xx |
| PCI 1-port UltraSCSI single-ended adapter (uses one PCI slot); includes internal 68-pin and 50-pin HD connectors and external 68-pin HD connector, maximum one per system; requires BN38C cable (2 to 20 m) to connect to single-ended UltraSCSI shelf | KZPBA-CA |
| PCI 1-port UltraSCSI differential adapter (uses one PCI slot); includes external 68-pin HD connector, maximum one per system; requires BN38C cable (2 to 25 m) to connect to differential UltraSCSI shelf or external RAID array controller | KZPBA-CB |
| 68-pin HD male-to-VHDCI male UltraSCSI cable; required for each external UltraSCSI shelf attached to KZPBA-CA/CB adapter, xx = 02, 03, 05, 10, 20, 25 m | BN38C-xx |
| 1-channel Ultra2 SCSI RAID controller, 4-MB cache, maximum four per system | SN-KZPBC-AA |

# *Options*

## Step 5 – Storage *(continued)*

**StorageWorks Shelf**

- Selection of StorageWorks shelf requires selection of UltraSCSI adapter and SCSI cable

| | |
|---|---|
| StorageWorks UltraSCSI single-bus shelf kit | BA36R-RC |
| StorageWorks UltraSCSI split-bus shelf kit | BA36R-RD |

**System Disk Drives (Supported in StorageWorks Shelf)**

| | |
|---|---|
| 9.1-GB 7,200 rpm UltraSCSI drive | DS-RZ1DA-VW |
| 9.1-GB 10,000 rpm UltraSCSI drive | DS-RZ1DD-VW |
| 18.2-GB 7,200 rpm UltraSCSI drive | DS-RZ1EA-VW |
| 18.2-GB 10,000 rpm UltraSCSI drive | DS-RZ1ED-VW |
| 36.4-GB 10,000 rpm UltraSCSI drive | DS-RZ1FC-VW |

**Removable Media Device for External StorageWorks Shelves**

| | |
|---|---|
| 600-MB 32X CD-ROM drive in StorageWorks carrier | DS-RRD47-VA |

**Expansion Boxes and SCSI Cables**

| | |
|---|---|
| External StorageWorks expansion box with 14 drive slots for 1 in (25.4 mm) universal Ultra2 SCSI drives, rackmounted with redundant power supplies, dual SCSI bus, I/O module, US power cord, two 12 ft (3.66 m) VHDCI-to-VHDCI cables<br>**Note**: For SCSI drive information refer to the Compaq SCSI hard drive compatibility table at http://www.compaq.com/storage/index.html and http://www.compaq.com/products/storageworks/hddu2nonplug/u2nonplugindex.html<br>**Note**: This Web site is available in English only. | DS-SSL14-RS |
| External StorageWorks deskside pedestal unit with 180W power supply, dual-speed blowers, UltraSCSI I/O personality module; configured for single bus | DS-BA356-KF |
| VHDCI male-to-68-pin HD male SCSI cable; required to connect external StorageWorks UltraSCSI pedestal to SN-KZPBA-CA/CB and SN-KZPCA-AA adapters<br>xx = -01 meter length, up to –020, 20 meter lengths | BN38C-xx |
| VHDCI male-to-VHDCI male SCSI cable; required to connect external StorageWorks UltraSCSI pedestal to SN-KZPAC-AA/CA controller<br>xx = -01 meter length, up to –025, 25 meter lengths | BN37A-xx |

## Step 6 – Graphics

- System consists of two PCI buses – three PCI slots on Bus 0 and two PCI slots on Bus 1
- For optimal graphics performance, all graphics adapters should be installed on Bus 0; there will be a loss of performance on any adapter placed on PCI Bus 1
- First graphics adapter for single head systems must be installed on PCI Bus 0
- Multi-head systems must be homogeneous – all ELSA Gloria Synergy
- Linux customers should refer to their Linux supplier for graphic adapter support

| | |
|---|---|
| ELSA Gloria Synergy graphics with 8-MB SGRAM, TruColour at 1280 x 1024, maximum two per system | SN-PBXGK-BB |

# *Options*

**Step 7 – Colour Monitors**

- Country Kit includes two country-specific power cords, one for system and one for monitor

| | |
|---|---|
| P700 Monitor – 17″ (16″ viewable image size) professional series auto-scanning colour monitor, flat definition Trinitron CRT, 0.25mm aperture grill pitch, VGA to 1280 x 1024 @t 75 Hz, TCO-99, MPR-II, Energy Star, attached 1.8-m video cable; without power cord, Northern Hemisphere | 3R-VRQP7-24 |
| Same as above, Southern Hemisphere | 3R-VRQP7-23 |
| P900 Monitor – 19″ (18″ viewable image size) professional series auto-scanning colour monitor, flat definition Trinitron CRT, 0.25mm aperture grill pitch, VGA to 1280 x 1024 @ 75 Hz, TCO-99, MPR-II, Energy Star, attached 1.8-m video cable; without power cord, Northern Hemisphere | 3R-VRQP9-24 |
| Same as above, Southern Hemisphere | 3R-VRQP9-23 |
| P1100 Monitor – 21″ (19.6″ viewable image size) auto-scanning colour monitor, Trinitron CRT, 0.28 mm aperture grill pitch, VGA to 1600 x 1200 @ 85 Hz NI, TCO-99, Energy Star, includes 1.8-m video cable; without power cord, Northern Hemisphere | 3R-VRQP1-24 |
| Same as above, Southern Hemisphere | 3R-VRQP1-23 |
| TFT 18″ Panel Monitor – 18″ viewable image size, TFT diagonal viewable image area; support for a maximum 1280 x 1024 display resolution @ 75 Hz; 160 degree horizontal and vertical viewing angles; removable base; pixel pitch of 0.28mm; brightness of 200 nits (typical); LiteSaver that conserves energy and backlight life | 3R-A0852-AA |
| S510 Monitor – 15” (13.8” viewable image size) multiple-scan colour monitor with Invar Shadow Mask, VGA to 1024 x 768 at 75 Hz, 0.28mm AG, MPR II, Northern Hemisphere with NA power cord | 3R-A1741-AA |
| Same as above with Eurocord | 3R-A2832-AA |
| Same as above, APD, no power cord | 3R-VRQS5-24 |
| P710 Monitor – 17” (16” viewable image size) auto-scanning colour monitor, Diamondtron NF, 0.25mm aperture grille pitch, VGA to 1280 x 1024 at 75 Hz, TCO-99, Northern Hemisphere with NA power cord | 3R-A2936-AA |
| Same as above, APD, no power cord | 3R-A2260-AA |
| Same as above, Northern Hemisphere, with power factor correction and Eurocord, 220V only | 3R-A2261-AA |
| P910 Monitor – 19” (18” viewable image size) auto-scanning colour monitor, Diamondtron NF, 0.25mm aperture grille pitch, VGA to 1280 x 1024 @ 85 Hz, TCO-99, Northern Hemisphere with NA power cord | 3R-A2935-AA |
| Same as above, Northern Hemisphere with power factor correction and Eurocord, 220V | 3R-A2265-AA |
| P1210 Monitor – 22” (20” viewable image size) auto-scanning colour monitor, Diamondtron NF, 0.24mm aperture grille pitch, VGA to 1600 x 1200 @ 85 Hz, TCO-99, Northern Hemisphere with power factor correction and NA power cord | 3R-A2934-AA |
| Same as above with Eurocord | 3R-VRQP2-24 |
| Same as above, APD, no power cord | 3R-A2268-AA |

**Video Cable**

- Each monitor includes a 1.8-m signal cable – a video cable is required for most server applications

| | |
|---|---|
| 1.8-m video cable | BN39C-02 |

# *Options*

## Step 7 – Colour Monitors *(continued)*

**Monitor Power Cords**

| | |
|---|---|
| North American, 120V, 75 in (1.91 m) | BN26J-1K |
| Australia, New Zealand, 98.42 in (2.5m) | BN19H-2E |
| Central Europe, 98.42 in (2.5m) | BN19C-2E |
| Denmark, 98.42 in (2.5m) | BN19K-2E |
| Egypt, India, South Africa, 98.42 in (2.5m) | BN19S-2E |
| Israel, 98.42 in (2.5m) | BN18L-2E |
| Italy, 98.42 in (2.5m) | BN19M-2E |
| Japan, 98.42 in (2.5m) | 3X-BN46F-02 |
| Switzerland, 98.42 in (2.5m) | BN19E-2E |
| UK, Ireland, 98.42 in (2.5m) | BN19A-2E |

## Step 8 – Network Options

- Systems include onboard 10/100 Ethernet (Twisted pair) controller

| | |
|---|---|
| XP1 MAU 10Base5 AUI/Thickwire, maximum two per system | SN-PCXAN-DE |
| XP1 MAU Card 10Base2 ThinWire, maximum two per system | SN-PCXAN-DF |

## Step 9 – AlphaStation XP1000 Rackmount Options

**M-Series Rackmount Kit**

- Rackmount kit must be ordered separately – requires removal of XP1000 front door

| | |
|---|---|
| AlphaStation XP1000 M-Series rackmount shelf kit; includes front panel bezel assembly | SN-BA26R-RA |

**M-Series Cabinets and Accessories**

M-series enclosures require the mandatory selection of the following items:

- H9A11, H9A10, or H9A15 cabinet, 120V or 240V
- Cabinet front door based on cabinet height (optional on H9A11 cabinet)
- Factory Integration
- Ballast kits as required

**M-Series Cabinet Configuration Chart for AlphaStation XP1000 (5U) with Storage Works shelves (4U)**

| Cabinet | Mounting Kit | Cabinet Height / Space | System | Shelves | Ballast Kit |
|---|---|---|---|---|---|
| H9A11-MC/MD | SN-BA26R-RA – Optional, must be ordered separately | 35 in (88.9 cm) / 20U | 1 | 3 | 1 |
| | | | 2 | 2 | 0 |
| | | | | 1 | 0 |
| | | | 4 | 0 | 0 |
| H9A10-MC/MD | SN-BA26R-RA – Optional, must be ordered separately | 54.2 in (137.67 cm) / 31U | 1 | 6 | 2 |
| | | | 2 | 5 | 1 |
| | | | 3 | 4 | 0 |
| | | | 4 | 2 | 0 |
| | | | 5 | 1 | 0 |
| | | | 6 | 0 | 0 |
| H9A15-MC/MD | SN-BA26R-RA – Optional, must be ordered separately | 66.5 in (168.91 cm) / 38U | 1 | 6 | 2 |
| | | | 1 | 6 | 2 |
| | | | 3 | 5 | 0 |
| | | | 4 | 4 | 0 |
| | | | 5 | 3 | 0 |
| | | | 6 | 2 | 0 |
| | | | 7 | 0 | 0 |

# *Options*

## Step 9 – AlphaStation XP1000 Rackmount Options *(continued)*

**M-series Cabinets**

| | |
|---|---|
| 43 in (109.22 cm) cabinet enclosure with 35 in (88.9 cm) or 20U of usable vertical space; 120V 24A controller with 10 NEMA 5-15R outlets, input power plug NEMA L5-30P, Americas, Asia Pacific; includes rear door, H7600-AA power distribution unit, trim kit, and front filler bezel kit | H9A11-MC |
| 43 in (109.22 cm) cabinet enclosure with 35 in (88.9 cm) or 20U of usable vertical space; 240V 16A controller with 12 IEC C13 outlets, input power plug IEC 309, 16A, Europe; includes rear door, H7600-DB power distribution unit, trim kit, and front filler bezel kit | H9A11-MD |
| 67 in (170.18 cm) cabinet enclosure with 54.2 in (137.67 cm) or 33U of usable vertical space; 120V dual-24A controller, each with 10 NEMA 5-15R outlets, input power plug NEMA L5-30P, Americas, Asia Pacific; includes rear door, top fan tray, and two H7600-AA power distribution units | H9A10-MC |
| 67 in (170.18 cm) cabinet enclosure with 54.2 in (137.67 cm) or 33U of usable vertical space; 240V dual-16 A controller, each with 12 IEC C13 outlets, input power plug IEC 309, 16A, Europe; includes rear door, top fan tray, and two H7600-DB power distribution units | H9A10-MD |
| 79 in (200.66 cm) cabinet enclosure with 66.5 in (168.91 cm) or 40U of usable vertical space; 120V dual-24A controller, each with 10 NEMA 5-15R outlets, input power plug NEMA L5-30P, Americas, Asia Pacific; includes rear door, top fan tray, and two H7600-AA power distribution units | H9A15-MC |
| 79 in (200.66 cm) cabinet enclosure with 66.5 in (168.91 cm)or 40U of usable vertical space; 240V dual-16A controller, each with 12 IEC C13 outlets, input power plug IEC 309, 16A, Europe; includes rear door, top fan tray, and two H7600-DB power distribution units | H9A15-MD |

**Note:** For more information on M-series Cabinet Enclosures: http://www.compaq.com/alphaserver/products/m-series/index.html **Note**: This Web site is available in English only.

**Cabinet Front Door**

| | |
|---|---|
| Top gun blue front door for H9A10-MC/MD cabinet | H9C10-TF |
| Top gun blue front door for H9A15-MC/MD cabinet | H9C15-TF |
| Top gun blue front door for H9A11-MC/MD cabinet; selection of front door for H9A11 is optional, cabinet includes front trim kit and filler bezel | H9C11-EB |

**Shelves supported in M-series Cabinets with front doors (H9A10/M9A15)**

| | |
|---|---|
| StorageWorks UltraSCSI single bus, single-ended shelf with 180W power supply and RETMA mounting kit | BA36R-RC |
| StorageWorks UltraSCSI split bus, single-ended shelf with 180W power supply and RETMA mounting kit | BA36R-RD |
| StorageWorks controller shelf with RETMA mounting kit and NEMA power for H9A10-MC, H9A15-MC cabinets (Americas, Asia Pacific); order BN30B-02 power cord for H9A10-MD, H9A15-MD cabinets (Europe) | BA35R-MR |
| 180W power supply | CK-BA35X-HH |

**Shelves supported in M-series Cabinets with Trim Kit** (H9A11)

| | |
|---|---|
| StorageWorks UltraSCSI single bus, single-ended shelf with 180W power supply and RETMA mounting kit, blue bezel | BA35C-AA |
| StorageWorks UltraSCSI split bus, single-ended shelf with 180W power supply and RETMA mounting kit, blue bezel | BA35C-BA |

**Factory Integration**

| | |
|---|---|
| Factory Integration of systems and storage devices assembled and configured in cabinet enclosure for H9A10/15 cabinet enclosures | YS-ASCAA-AA |
| Factory Integration of systems and storage devices assembled and configured in cabinet enclosure for H9A11 cabinet enclosures | YS-ASCAA-AB |

**Ballast Kit**

- Ballast is dead weight added to a cabinet at specific locations for specific configurations to meet safety regulations for installation, operation, and service; see “Cabinet Configuration Chart” for ballast kit requirements

| | |
|---|---|
| Two 35-40 lb (15.88 kg-18.14 kg) steel plates | H9C10-MC |

# *Options*

## Step 9 – AlphaStation XP1000 Rackmount Options *(continued)*

**Rackmount Power Cords**

| | |
|---|---|
| North America, 14.76 ft (4.5 m) | BN20Z-4E |
| Non-North America, 14.76 ft (4.5 m) | 3X-BN46L-4E |
| Japan, Dentori approved, 14.76 ft (4.5 m) | 3X-BN46D-4E |

**Compaq *Custom*Systems Support**

- Cabinets containing systems and storage must be assembled by qualified assemblers: Compaq Manufacturing, Compaq *Custom*Systems Group, or an authorized Compaq Certified Integration Partner
- For custom integration of systems, options, and additional Compaq and third-party devices, or for other cabinets, doors, and trim kits of a different colour, contact Compaq *Custom*Systems at 1-800-AT-COMPAQ (1-800-282-6672), or contact your local authorized Compaq Certified Integration Partner

## Step 10 – XP1000 Field Upgrade Option

| | |
|---|---|
| XP1000 500-MHz CPU upgrade to XP1000 667-MHz CPU for Tru64 UNIX, OpenVMS, and Linux-Ready systems | SN-E2G6W-UG |

## Step 11 – Hardware Supplemental Services

**Hardware Supplemental Services**

| | |
|---|---|
| 3-year 5 x 9 Next Business Day Onsite XP1000/667 warranty uplift (must purchase within 90 days of system purchase) | FM-AWXHW-36 |
| 3-year 5 x 9 Same Day – 4-hour Response Onsite XP1000/667 warranty uplift (must purchase within 90 days of system purchase) | FM-AW4HR-36 |
| 3-year 7 x 24 Same Day – 4-hour Response Onsite XP1000/667 warranty uplift (must purchase within 90 days of system purchase) | FM-AW724-36 |
| In Warranty XP1000/667 service upgrade for 1st year to 5x9 Next Business Day | FS-CPQ05-WJ |
| In Warranty XP1000/667 service upgrade for 2nd or 3rd years to 5x9 Next Business Day | FS-CPQ05-WK |
| Post Warranty XP1000/667 service – 5 x 9 Next Business Day | FS-CPQ05-35 |
| XP1000/667 Hardware Installation | FM-AWINS-IN |

## Step 12 – User Documentation

| | |
|---|---|
| Compaq AlphaStation XP1000 Installation and Setup Guide in seven languages: English, French, German, Japanese, Spanish, Italian, Dutch | EK-XP100-SI |
| XP1000 Service Guide (CD-ROM) | QA-6G3AA-G8 |

## *Technical Specifications*

**System Unit**

| | |
|---|---|
| **Dimensions** (HxWxD) | |
| Deskside Cabinet | 16 x 8.6 x 17.5 in/41 x 22 x 44.8 cm |
| Shipping Carton | 23.4 x 20.5 x 15.4 in/59.4 x 52.1 x 39 cm |
| **Weight** | |
| With drive cage and one hard drive installed | 41 lbs/18.6 kg |
| Shipping weight | 49 lbs/22.2 kg |
| **Power Supply, Auto Ranging** | |
| Nominal Range | 100-132 VAC/230 VAC |
| Operating Range | 90-132 VAC/180-264 VAC |
| Nominal Frequency | 60 Hz/60 Hz |
| Operating Frequency | 47 to 63 Hz |
| Maximum Input Current | 100-120 range 6.5 arms/200-240 range 3.3 arms |
| **Temperature Range** | |
| Operating | 50° to 104°F/10° to 40°C |
| Non-operating | –40° to 151°F/–40° to 66°C |
| **Relative Humidity** (non-condensing) | |
| Operating | 20% to 80% |
| Non-operating | 10% to 90% |
| **Maximum Altitude** (non-pressurized) | |
| Operating | 10,000 ft/3,048 m |
| Non-operating | 40,000 ft/12,192 m |
| **Power Consumption** | |
| Typical | 215 W/733 Btu/hr |

(C)2001 Compaq Computer Corporation. All rights reserved. Compaq is a trademark of Compaq Computer Corporation. The information in this publication is subject to change without notice. Printed in Canada.