Overview

AT A GLANCE

AlphaStation XP1000 Systems include:

- Tower enclosure with Alpha 21264A (EV67) 667-MHz CPU with 64-KB data cache, 64-KB instruction cache, and 4-MB Level 2 cache
- Five Expansion slots on two buses: Two 64-bit PCI slots, two 32-bit PCI slots, one PCI/ISA 32-bit combination slot
- Two memory option banks, four DIMM slots per bank, maximum 2-GB memory
- Six Storage bays: One diskette drive bay, one CD-ROM drive bay, two 5.25 in x 1.6 in (133.35 mm x 40.64 mm) removable media bays, two 3.5 in x 1 in (88.9 mm x 25.4 mm) hard disk drive bays
- 400W power supply
- Onboard wide UltraSCSI adapter
- Onboard 16-bit Soundblaster compatible audio
- Onboard 10/100 Ethernet (Twisted pair); ThinWire and Thick wire optional
- Integrated I/O comprising parallel port, two serial ports, audio in, audio out, headphone, microphone, mouse, and keyboard ports
- 1.44 -MB diskette drive
- 650-MB 40X CD-ROM drive
- Factory Installed Software: Tru64 UNIX or OpenVMS
- Protected by Compaq Services, including a three-year on-site limited warranty - Certain restrictions and exclusions apply. Consult the Compaq Customer Support Center for details. In Canada, consult the Product Information Centre at 1-888-88-COMPAQ.

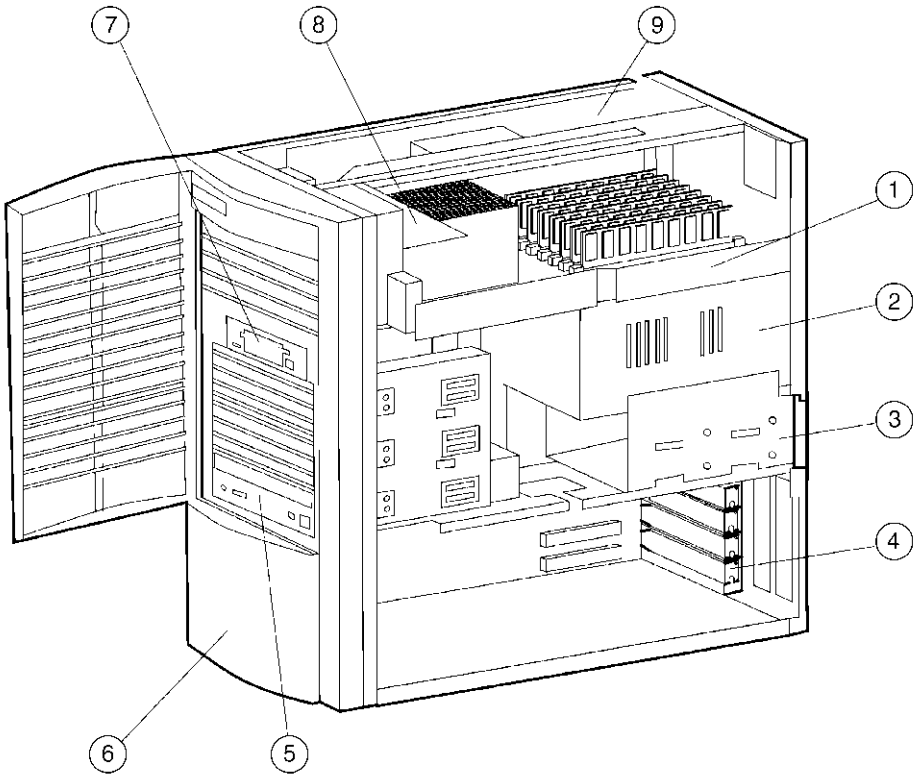

1. CPU and memory daughter-card latch
2. 400-watt auto-sensing power supply
3. Internal hard drive cage (hinged)
4. PCI and ISA expansion slots
5. 40X Max CD-ROM drive
6. Front bezel
7. 1.44-MB diskette drive
8. Fan pipe (directs air to CPU heatsink area)
9. Main logic board

Standard Features

Processor

Alpha 21264A (EV67) 667-MHz CPU

Cache Memory

64-KB data cache, 64-KB instruction cache and 4-MB Level 2 cache

Upgradability

500-MHz to 667-MHz CPU upgrade available

Memory

Standard	Minimum of 256-MB mandatory for CTO systems
Maximum	2 GB

Network Controller

Onboard 10/100 Fast Ethernet adapter

Expansion Ports

Parallel (25-pin)	1
Serial (9-pin)	2
Pointing device (mouse) P/S2	1
Keyboard P/S2	1
Microphone	1
Headphones/Audio-out	1
Audio-in	1

Expansion Slots

I/O (total)	5
PCI	2 (64-bit), 2 (32-bit)
Shared PCI/ISA	1

Storage Controller

Onboard Wide UltraSCSI adapter

Storage

Diskette Drive	1.44 MB
CD-ROM	650-MB 40X ATAPI CD-ROM Drive
Internal Hard Drives	Choice of 4.3-GB, 9.1-GB, 18.2-GB, 36.4-GB drives
Maximum Internal Storage	146 GB

Manageability

Compaq Insight Manager

OS Support

Tru64 UNIX systems include Tru64 UNIX V5.1 with Tru64 UNIX base license and 2-user license

OpenVMS systems include OpenVMS 7.2-1 with OpenVMS Systems Value License Package with OpenVMS Alpha base license, OpenVMS 1-user license, NAS Client 150

Service and Support

Compaq Services provides a wide range of service offerings including a three-year limited warranty fully supported by a worldwide network of resellers and service providers; lifetime toll-free 7 x 24 hardware technical phone support.

Note: Certain restrictions and exclusions apply. Consult the Compaq Customer Support Center for details. In Canada, consult the Product Information Centre at 1-888-88-COMPAQ.

Systems/Options

Step 1 – Select system

Configure-to-order (CTO) Systems

CTO systems require the **mandatory** selection of the following items:

- Minimum of 256-MB memory
- Hard disk drive
- Country Kit

Country-specific keyboard; keyboard is not mandatory but essential for full system operation

Note: Additional items in Steps 3 through 11 are optional and will be factory integrated when ordered with CTO systems.

OS	CPU	Memory	Graphics	Hard Drive	Order No.
Tru64 UNIX	667 MHz	Mandatory	Optional	Mandatory	SN-E2G6W-32
OpenVMS	667 MHz	Mandatory	Optional	Mandatory	SN-E2G6W-A4

Step 2 – Country Kits

- Tru64 UNIX and OpenVMS universal country kits include two country-specific power cords and mouse; multi-lingual user documentation is shipped with system kernel. Tru64 UNIX license included with associated CTO systems.
- Country kit required for system to be operational
- Bulk system orders must include country kits equal to the total number of systems ordered

Country	FIS and Documentation, Language Supported	
United States	English	SN-PBB0U-AA
Australia/New Zealand	English	SN-PBB0U-CN
Canada	French	SN-PBB0U-AC
Chinese	Simplified Chinese	SN-PBB0U-CV
Chinese/General Asia	English	SN-PBB0U-CA
Denmark	English	SN-PBB0U-AD
Finland	English	SN-PBB0U-AF
France, Belgium	French	SN-PBB0U-AP
General European	English	SN-PBB0U-EC
Germany	German	SN-PBB0U-AG
Italy	Italian	SN-PBB0U-AI
Japan	Japanese	SN-PBB0U-AJ
Japan	English	SN-PBB0U-CC
Netherlands	Dutch	SN-PBB0U-AH
Norway	English	SN-PBB0U-AN
Spain	Spanish	SN-PBB0U-AS
Sweden	English	SN-PBB0U-AM
Switzerland/English	English	SN-PBB0U-CH
Switzerland/French	French	SN-PBB0U-AK
Switzerland/Germany	German	SN-PBB0U-AL
Switzerland/Italian	Italian	SN-PBB0U-AW
United Kingdom	English	SN-PBB0U-AE

Options

Step 3 – Keyboards

- CTO systems do not include a keyboard. Selection of keyboard is not mandatory, but is essential for full system operation.
- Keyboards are colored to match CPU and monitor. Alternative keyboards purchased through distribution channels may not be the correct color matches.

Country	Tru64 UNIX	OpenVMS
US/English	SN-LKQ47-AA	LK461-A2
Arabic	SN-LKQ47-BR	-
Belgium	SN-LKQ47-AB	LK461-AB
Bosnia, Herzegovina, Croatia, Serbia, Yugoslavia	SN-LKQ97-AX	-
Brazil	-	-
Canada/English	-	LK461-AQ
Canada/French	SN-LKQ47-AC	LK461-AC
China	SN-LKQ47-CV	-
Czech Republic	SN-LKQ47-BV	LK461-BV
Denmark	SN-LKQ47-AD	LK461-AD
Finland	SN-LKQ47-AF	LK461-AF
France	SN-LKQ47-AP	LK461-AP
German	SN-LKQ47-AG	LK461-AG
Greece	SN-LKQ47-BH	LK461-BH
Hebrew	SN-LKQ97-AT	LK461-AT
Hungary	SN-LKQ47-BQ	LK461-BQ
International	SN-LKQ47-BA	-
Italy	SN-LKQ47-AI	LK461-AI
Japan	-	-
Latin-American/Spanish	SN-LKQ47-AR	-
Netherlands	SN-LKQ47-AH	LK461-AH
Norway	SN-LKQ47-AN	LK461-AN
Poland	SN-LKQ47-BP	LK461-BP
Portugal	SN-LKQ97-AV	LK461-AV
Romania	-	LK461-BL
Russia/Cyrillic	SN-LKQ47-BT	LK461-BT
Slovak	SN-LKQ47-CZ	LK461-CZ
South Korean	SN-LKQ47-BK	-
Spain	SN-LKQ47-AS	LK461-AS
Sweden	SN-LKQ47-AM	LK461-AM
Switzerland/French	SN-LKQ47-AK	LK461-AK
Switzerland/German	-	LK461-AL
Taiwan	SN-LKQ47-BI	-
Thailand	SN-LKQ47-CB	-
Turkey	SN-LKQ47-BU	LK461-BU
Turkey/French	-	LK461-BW
UK	SN-LKQ47-AE	-
Yugoslavia	-	LK461-BY

Options

Step 4 – Memory

- Selection of a minimum of 256-MB memory is mandatory for CTO systems
- Systems support a maximum of 2-GB memory (two memory banks support four DIMMs per bank)

256-MB ECC memory DIMMs (4 x 64MB DIMMs)	SN-MSP01-KB
512-MB ECC memory DIMMs (4 x 128MB DIMMs)	SN-MSP01-KC
1024-MB ECC memory DIMMs (4 x 256MB DIMMs)	SN-MSP01-KD

Step 5 – Internal Storage

Step 5a – SCSI Controllers – Internal

- All systems include onboard UltraSCSI controller for internal disks only
- Systems support a maximum of two additional PCI storage adapters or RAID controllers for additional storage

	Maximum # Supported		
	Tru64 UNIX	OpenVMS	
PCI single-channel UltraSCSI single-ended adapter (uses one PCI slot)	2	2	SN-KZPBA-CA
PCI single-channel UltraSCSI differential adapter (uses one PCI slot)	2	2	SN-KZPBA-CB
PCI 64-bit/66-MHz dual-channel wide Ultra3 SCSI adapter (uses one PCI slot) – requires Ultra3 cable kit (3X-BN53A-01)	2 V5.1	-	3X-KZPEA-DB
PCI single-channel wide Ultra2 (LVD) adapter (uses one PCI slot)	1	1	SN-KZPCA-AA

Step 5b – Internal Storage -- Disk Drives and Removable Media

- CTO systems require one mandatory hard disk drive
- Hard disk drive ordered with Tru64 UNIX or OpenVMS CTO systems includes factory installed software
- Systems support up to four hard disk drives:
  - Two 3.5-in (88.9 mm) x 1 in (25.4 mm) hard disk drives in internal bays.
  - Two 3.5-in (88.9 mm) x 1.6 in (40.64 mm) or 1 in (25.4 mm) hard disk drives supported in the 5.25” removable media bays

SCSI Disk Drives

4.3-GB Ultra2 LVD Wide SCSI 10K rpm 1” hard disk drive	SN-PBXRW-RB
9.1-GB Ultra2 LVD Wide SCSI 7200 rpm 1 in (25.4 mm) hard disk drive	SN-PBXRW-SC
9.1-GB Ultra3 LVD Wide SCSI 10K rpm 1 in (25.4 mm) hard disk drive	SN-PBXRW-VB
18.2-GB Ultra2 LVD Wide SCSI 7200 rpm 1 in (25.4 mm) hard disk drive	SN-PBXRW-TB
18.2-GB Ultra3 LVD Wide SCSI 10K rpm 1 in (25.4 mm) hard disk drive	SN-PBXRW-WC
36.4-GB Ultra3 LVD Wide SCSI 10K rpm 1 in (25.4 mm) hard disk drive	SN-PBXRW-XB

Removable Media

- Systems include one 5.25 in (133.35 mm) 40X CD-ROM drive
- Systems support two additional 5.25 in (133.35 mm) removable media devices (5.25 in/133.35 mm) removable media bays also support hard disk drives)
- Systems support additional ATAPI device
- DVD-ROM is data support only (no MPEG-2 capability)
- DVD-ROM is backward compatible with CD-ROM media

35/70-GB 8 mm AIT Wide SCSI internal tape drive	SN-PBXTA-AA
50/100-GB 8 mm AIT Ultra2 (LVD) SCSI internal tape drive	3X-SZ50X-AA
4/8-GB 4 mm DAT internal SCSI tape drive, 1.6 in (40.64 mm) front accessible bay	SN-TLZ09-LK
12/24-GB 4 mm DAT internal SCSI tape drive, 1.6 in (40.64 mm) front accessible bay	SN-TLZ10-LK
20/40-GB 4 mm DAT Ultra2 (LVD) SCSI internal tape drive	3X-SD20X-AA
100-MB ATAPI ZIP drive	SN-PBXRX-CA
6X/32X ATAPI DVD-ROM drive (data device only)	SN-PBXRV-AA

Options

Step 6 – External Storage –Optional

- UltraSCSI configurations require UltraSCSI components (controllers, shelves, disks, cables)

Step 6a -- StorageWorks BA356/BA370 Options

Storage Controllers/Adapters for StorageWorks BA356/BA370 Pedestals and Shelves

- Storage controllers require a minimum operating system revision of Tru64 UNIX V4.0F or OpenVMS V7.1-2 unless noted otherwise.
- Each storage controller/adapter uses one PCI slot

	Maximum # Supported		
	Tru64 UNIX	OpenVMS	
PCI 1-port UltraSCSI single-ended adapter; includes internal 68-pin and 50-pin HD connectors and external 68-pin HD connector; requires BN38C-xx cable (2-20m) to connect to single ended UltraSCSI shelf	2	2	SN-KZPBA-CA
PCI 1-port UltraSCSI differential adapter; includes external 68-pin HD connector; requires BN38C-xx cable (2-25m) to connect adapter to Differential UltraSCSI shelf or RAID controller	2	-	SN-KZPBA-CB
68-pin HD male-to-VHDCI male UltraSCSI cable; required for each external UltraSCSI shelf attached to KZPBA-CA/CB adapter			BN38C-xx
PCI 1-port UltraSCSI RAID controller with 4-MB cache memory, includes RAID Array 230/Plus subsystem software and documentation kit and VHDCI female connector; tape drives not supported – 18.2-GB or higher disk drives not supported on KZPAC-xx RAID controllers	1	1	SN-KZPAC-AA
PCI 3-port UltraSCSI RAID controller with 4-MB cache memory, includes RAID Array 230/Plus subsystem software and documentation kit; tape drives not supported; SCSI cable required for each active port; requires BN31K-0E for external third-port connection –18.2-GB or higher disk drives not supported on KZPAC-xx RAID controllers	1	1	SN-KZPAC-CA
PCI 3-port UltraSCSI RAID controller with 8-MB cache memory, includes RAID Array 230/Plus subsystem software and documentation kit; tape drives not supported; SCSI cable required for each active port; requires BN31K-0E for external third-port connection –18.2-GB or higher disk drives not supported on KZPAC-xx RAID controllers	1	1	SN-KZPAC-CB
Cache battery backup for KZPAC controller			KZPSC-UB
VHDCI male-to-VHDCI male UltraSCSI cable, xx=02, 2E(2.5), 03, 05, 10, 20 m) **Note**: Manufacturing may substitute BN37A-02 cable for specific cabinet configurations			BN37A-xx
SCSI cable/bulkhead assembly kit with KZPAC-CA/CB, allows external connection of one third port			BN31K-0E
SCSI cable/bulkhead assembly kit with two ports for KZPAC-CA/CB, allows external connection of two third ports			KZPAC-SB
PCI 3-channel 64-bit Ultra2 LVD RAID controller, 64-MB cache – supported with DS-BA356-SG and DS-BA35X-FC only	1	-	DS-KZPCC-CE

Options

Step 6 – External Storage –Optional *(continued)*

StorageWorks UltraSCSI BA356 Pedestals and BA370 Rackmount Enclosure

StorageWorks BA356 Pedestals

- UltraSCSI top gun blue pedestals provide support for UltraSCSI disk drives; pedestal is available in single-bus or split-bus configurations and includes a personality module and 180W power supply
- UltraSCSI shelf supports: seven 3.5 in (88.9 mm) hard disk drives, or one 5.25 in (133.35 mm) device and four 3.5 in (88.9 mm) hard disk drives, or two 5.25 in (133.35 mm) devices and one 3.5 in (88.9 mm) hard disk drive
- Installation of redundant power supply reduces number of 3.5″ drive slots by one

UltraSCSI single-ended pedestal, single-bus personality module, 180W power supply	DS-BA356-KF
UltraSCSI single-ended pedestal, split-bus personality module, 180W power supply	DS-BA356-KG
UltraSCSI pedestal, single-channel differential personality module, 180W power supply	DS-BA356-KH
180W power supply, includes 120V North American and 240V IEC power cord	CK-BA35X-HH

StorageWorks BA370 Rackmount Enclosure

- M-series cabinets (H9A10 and H9A15) allow one BA370 enclosure to be installed in front cabinet
- Host adapter, RAID Array controller, platform-specific Solutions Software Kit, and disk drives must be ordered separately

BA370 front mount rackmount enclosure with five 180W power supplies, includes RETMA rackmount kit; first BA370 enclosure must be front mounted in cabinet, 20U height	2T-BA370-AS
Factory configured RAID of rackmounted BA370/HSZ80	YS-ASCRD-AA

Note: Factory configured RAID sets for disks in rackmounted BA370 StorageWorks shelf controlled by one or two HSZ70s require completion of questionnaire located at http://www.digital.com/alphaserver/fcr
Note: This Web site is available in English only.

StorageWorks UltraSCSI Rackmount Shelves – Requires selection of UltraSCSI adapter and SCSI cable

- StorageWorks shelf supports seven 3.5 in x 1.6 in (88.9 mm x 40.64 mm) hard disk drives; with the addition of redundant power supply, six drives are supported
- StorageWorks shelf kits are mounted back-to-back in rackmount cabinets

StorageWorks UltraSCSI single-bus shelf kit	BA36R-RC
StorageWorks UltraSCSI split-bus shelf kit	BA36R-RD
3-m SCSI cable	BN37A-03

Devices Supported in StorageWorks UltraSCSI Shelves

Disk Drives

- Maximum six (10,000 rpm) or seven (7,200 rpm) drives supported in StorageWorks shelf
- One power supply supports a maximum of six 10,000 rpm disks

9.1-GB UltraSCSI drive 7,200 rpm	DS-RZ1DA-VW
9.1-GB UltraSCSI drive 10,000 rpm	DS-RZ1DD-VW
18.2-GB UltraSCSI drive 7,200 rpm	DS-RZ1EA-VW
18.2-GB UltraSCSI drive 10,000 rpm	DS-RZ1ED-VW
36.4-GB UltraSCSI drive 10,000 rpm	DS-RZ1FC-VW

Removable Media Devices

12/24-GB 4 mm DAT narrow SCSI tape drive in StorageWorks carrier	DS-TLZ10-VA
35/70-GB AIT tape drive in StorageWorks carrier	DS-AIT35-VW
600-MB 32X CD-ROM drive in StorageWorks carrier	DS-RRD47-VA

Options

Step 6 – External Storage –Optional *(continued)*

Step 6b – StorageWorks Model 42xx and 43xx Options

StorageWorks Model 42xx and 43xx Adapters/Controllers

- Storage controllers require a minimum operating system revision of Tru64 UNIX V4.0F or OpenVMS V7.1-2 unless noted otherwise.
- Each storage controller/adapter uses one PCI slot

	Maximum # Supported		
	Tru64 UNIX	OpenVMS	
PCI 1-port Ultra2 SCSI (LVD) single-ended adapter, 68-pin HD connector, requires BN38C cable (2 to 20m) to connect to single-ended UltraSCSI shelf – Model 42xx only	1	1	SN-KZPCA-AA
68-pin HD male-to-VHDCI male UltraSCSI cable; required for each external UltraSCSI shelf attached to KZPCA-AA adapter			BN38C-xx
PCI 2-channel LVD multimode Ultra3 adapter, VHDCI – Model 43xx only	1 V5.1	-	3X-KZPEA-DB
PCI 3-channel 64-bit Ultra2 LVD RAID controller, 64-MB cache	1	-	DS-KZPCC-CE

StorageWorks Model 42xx and 43xx Universal Drive Shelves

Model 4254 (Ultra2 SCSI (LVD)

StorageWorks Model 4254 Ultra2 SCSI (LVD) split-bus universal drive shelf (Refer to Compaq StorageWorks Enclosure 4200 QuickSpecs when configuring shelf) When selecting a DS-SSL14-Rx split-bus shelf, order two 3X-KZPCA-AA adapters; Model 4254 enclosures are compatible with Wide Ultra2 (LVD) adapters only **Note**: The depth of a DS-SSL14-Rx shelf does not allow front and rear mounting, US	DS-SSL14-RS
Same as above, International	DS-SSL14-R3
Same as above, Japan	DS-SSL14-R4

Model 4314R (Ultra3 SCSI)

StorageWorks Model 4314R Ultra3 SCSI rackmount single bus universal drive shelf, US	DS-SL13R-AA
Same as above, International	DS-SL13R-AB
Same as above, Japan	DS-SL13R-AJ

Model 4354 (Ultra3 SCSI)

StorageWorks Model 4354R Ultra3 SCSI rackmount dual bus universal drive shelf, US	DS-SL13R-BA
Same as above, International	DS-SL13R-BB
Same as above, Japan	DS-SL13R-BJ

Model 4300 I/O Module (Ultra3 SCSI)

StorageWorks Model 4300 Ultra 160 SCSI single port LVD, I/O module	DS-SE3ZJ-DA
StorageWorks Model 4300 Ultra 160 SCSI dual port LVD, I/O module	DS-SE3ZJ-SA

Disk Drives (Supported in Model 42xx and 43xx Universal Drive Shelves)

9.1-GB Ultra2 (LVD) 7,200 rpm 1.0 in (25.4 mm) Universal drive	3R-A0525-AA
9.1-GB Ultra3 (LVD) 10,000 rpm 1.0 in (25.4 mm) Universal drive	3R-A0584-AA
9.1-GB Ultra3 (LVD) 15,000 rpm 1.0 in (25.4 mm) Universal drive	3R-A1542-AA
18.2-GB Ultra2 (LVD) 7,200 rpm 1.0 in (25.4 mm) Universal drive	3R-A0527-AA
18.2-GB Ultra3 (LVD) 10,000 rpm 1.0 in (25.4 mm) Universal drive	3R-A1543-AA
18.2-GB Ultra3 (LVD) 15,000 rpm 1.0 in (25.4 mm) Universal drive	3R-A0919-AA
36.4-GB Ultra3 (LVD) 10,000 rpm 1.0 in (25.4 mm) Universal drive	3R-A0528-AA

Options

Step 6 – External Storage –Optional *(continued)*

Step 6c -- Tabletop Tape Drives

- Tape drives require single-ended UltraSCSI adapter (KZPBA-CA or KZPCM-DA) and country-specific power cord

12/24-GB 4-mm DAT narrow single-ended tabletop SCSI tape, includes 120V North American power cord, requires BN31W-xx SCSI cable	DS-TLZ10-DB
32/64-GB DAT loader in carrier	TLZ9L-VA
32/64-GB tabletop DAT loader	TLZ9L-DB
20/40-GB SCSI (DLT 4000E) tabletop drive (Tru64 UNIX and OpenVMS only)	TZ88N-TA
5, 7, 10, 14-GB 8-mm tabletop, single-ended SCSI	TKZ9F-TA

Step 7 – Graphics

- Graphics adapter optional for Tru64 UNIX and OpenVMS CTO systems
- System consists of two PCI buses – three PCI slots on Bus 0 and two PCI slots on Bus 1
- For optimal graphics performance, all graphics adapters should be installed on Bus 0; there will be a loss of performance on any adapter placed on PCI Bus 1
- First graphics adapter for single head systems must be installed on PCI Bus 0
- Multi-head systems must be homogeneous – all ELSA GLoria Synergy or all PowerStorm 300, etc.
- Tru64 UNIX and OpenVMS graphics options require DIGITAL Open3D media, included in factory installed software (FIS)

	Maximum # Supported		
	Tru64 UNIX	OpenVMS	
ELSA GLoria Synergy graphics with 8-MB SGRAM, TruColor at 1280 x 1024	4[1]	5[1]	SN-PBXGK-BB
PowerStorm 300 midrange 3D graphics with 15-MB frame buffer memory and 16-MB texture memory, TruColor at 1280 x 1024	3[2]	4[4]	SN-PBXGD-AD
PowerStorm 350 midrange 3D graphics with 30-MB frame buffer memory and 32-MB texture memory, TruColor at 1900 x 1200	3[2]	4[4]	SN-PBXGD-AE[3]

(1) Tru64 UNIX and OpenVMS support one to four heads for 2D only.

(2) Updates on multi-head support can be located at http://www1.service.digital.com/open3d **Note**: This Web site is available in English only.

(3) PowerStorm 350 customers that require displaying the highest resolution stereo graphics (1280x1024 @ 120Hz) should consider the Viewsonic P817 monitor as their monitor solution.

(4) OpenVMS supports up to three PowerStorm 300 adapters and one PowerStorm 350 adapter on the same PCI bus. The TIMA update kit for multi-head support can be found at http://www.openvms.compaq.com/openvms/products/mmov **Note**: This Web site is available in English only.

Step 8 – Color Monitors

- Country Kit includes two country-specific power cords, one for system and one for monitor

P700 Monitor – 17″ (16″ viewable image size) professional series auto-scanning color monitor, flat definition Trinitron CRT, 0.25mm aperture grill pitch, VGA to 1280 x 1024 @ 75 Hz, TCO- 99, MPR-II, Energy Star, attached 1.8-m video cable; without power cord, Northern Hemisphere	3R-VRQP7-24
Same as above, Southern Hemisphere	3R-VRQP7-23
P900 Monitor – 19″ (18″ viewable image size) professional series auto-scanning color monitor, flat definition Trinitron CRT, 0.25mm aperture grill pitch, VGA to 1280 x 1024 @ 75 Hz, TCO-99, MPR-II, Energy Star, attached 1.8-m video cable; without power cord, Northern Hemisphere	3R-VRQP9-24
Same as above, Southern Hemisphere	3R-VRQP9-23
P1100 Monitor – 21″ (19.6″ viewable image size) auto-scanning color monitor, Trinitron CRT, 0.28mm aperture grill pitch, VGA to 1600 x 1200 @ 85 Hz NI, TCO-99, Energy Star, includes 1.8-m video cable; without power cord, Northern Hemisphere	3R-VRQP1-24
Same as above, Southern Hemisphere	3R-VRQP1-23

Options

Step 8 – Color Monitors *(continued)*

TFT 18" Panel Monitor – 18" viewable image size, TFT diagonal viewable image area; support for a maximum 1280 x 1024 display resolution @ 75 Hz; 160 degree horizontal and vertical viewing angles; removable base; pixel pitch of 0.28mm; brightness of 200 nits (typical); LiteSaver that conserves energy and backlight life	3R-A0852-AA
S510 Monitor – 15" (13.8" viewable image size) multiple-scan color monitor with Invar Shadow Mask, VGA to 1024 x 768 at 75 Hz, 0.28mm AG, MPR II, Northern Hemisphere with NA power cord	3R-A1741-AA
Same as above with Eurocord	3R-A2832-AA
Same as above, APD, no power cord	3R-VRQS5-24
P710 Monitor – 17" (16" viewable image size) auto-scanning color monitor, Diamondtron NF, 0.25mm aperture grille pitch, VGA to 1280 x 1024 at 75 Hz, TCO-99, Northern Hemisphere with NA power cord	3R-A2936-AA
Same as above, APD, no power cord	3R-A2260-AA
Same as above, Northern Hemisphere, with power factor correction and Eurocord, 220V only	3R-A2261-AA
P910 Monitor – 19" (18" viewable image size) auto-scanning color monitor, Diamondtron NF, 0.25mm aperture grille pitch, VGA to 1280 x 1024 @ 85 Hz, TCO-99, Northern Hemisphere with NA power cord	3R-A2935-AA
Same as above, Northern Hemisphere with power factor correction and Eurocord, 220V	3R-A2265-AA
P1210 Monitor – 22" (20" viewable image size) auto-scanning color monitor, Diamondtron NF, 0.24mm aperture grille pitch, VGA to 1600 x 1200 @ 85 Hz, TCO-99, Northern Hemisphere with power factor correction and NA power cord	3R-A2934-AA
Same as above with Eurocord	3R-VRQP2-24
Same as above, APD, no power cord	3R-A2268-AA

Video Cable

- Each monitor includes a 1.8-m signal cable – a video cable is required for most server applications

1.8-m video cable	BN39C-02

Monitor Power Cords

North American, 120V, 75 in (1.91m)	BN26J-1K
Australia, New Zealand, 98.42 in (2.5m)	BN19H-2E
Central Europe, 98.42 in (2.5m)	BN19C-2E
Denmark, 98.42 in (2.5m)	BN19K-2E
Egypt, India, South Africa, 98.42 in (2.5m)	BN19S-2E
Israel, 98.42 in (2.5m)	BN18L-2E
Italy, 98.42 in (2.5m)	BN19M-2E
Japan, 98.42 in (2.5m)	3X-BN46F-02
Switzerland, 98.42 in (2.5m)	BN19E-2E
UK, Ireland, 98.42 in (2.5m)	BN19A-2E

Options

Step 9 – Network Options

- Systems include onboard 10/100 Ethernet (Twisted pair) controller

	Maximum # Supported		
	Tru64 UNIX	OpenVMS	
XP1 MAU 10Base5 AUI/Thickwire	1	1	SN-PCXAN-DE
XP1 MAU Card 10Base2 ThinWire	1	1	SN-PCXAN-DF
PCI-to-10/100 Ethernet NIC 8255x	2	2	3X-DE600-AA
PCI dual-port 10/100 UTP Fast Ethernet adapter and base module, must be installed in primary PCI 64-bit slot; requires Tru64 UNIX V4.0F and NHD2 1.0.3 or OpenVMS V7.2-1	2	2	3X-DE602-AA
Single-port multi-mode (MMF) add-on daughter card for 3X-DE602-AA, must be installed in primary PCI 64-bit slot; requires Tru64 UNIX V4.0F and NHD2 1.0.3 or OpenVMS V7.2-1	2	2	3X-DE602-FA
PCI Token Ring adapter, must be installed in PCI-1 bus on Tru64 UNIX systems	2	2	SN-PBXNP-AC
PCI FDDI adapter, DAS TP-PMD	2	2	3X-DEFPA-MC
PCI FDDI adapter SAS TP-PMD	2	2	3X-DEFPA-UC
PCI FDDI adapter, SAS MMF, SC	2	2	3X-DEFPA-AC
PCI FDDI adapter, DAS UTP, MMF, SC	2	2	3X-DEFPA-DC
PCI 4-port asynchronous controller	2[1]	2	PBXDA-AA
PCI 8-port asynchronous controller	2[1]	2	PBXDA-AB
PCI 16-port asynchronous controller	2[1]	2	PBXDA-AC
PCI 2-port synchronous controller, requires BC33x-06 cable	2[1]	2	PBXDP-AA
PCI 4-port synchronous controller, requires BC33x-06 cable	2[1]	2	PBXDP-AB
PCI 8-port synchronous controller, requires BC33x-06 cable	2[1]	2	SN-PBXDP-AC
Gigabit Ethernet adapter	1	1	DEGPA-SA
PCI-to-ATM 155 Mb adapter - Fiber	1	-	3X-DAPBA-FA
PCI-to-ATM 155 Mb adapter - UTP	1	-	3X-DAPBA-UA

(1) Controllers supported with Tru64 UNIX V4.0F only

Options

Step 10 – AlphaStation XP1000 Rackmount Options

M-series Rackmount Kit

- Rackmount kit must be ordered separately – requires removal of XP1000 front door

AlphaStation XP1000 M-series rackmount shelf kit; includes front panel bezel assembly SN-BA26R-RA

M-series Cabinets and Accessories

M-series enclosures require the mandatory selection of the following items:

- H9A11, H9A10, or H9A15 Cabinet, 120V or 240V
- Cabinet front door based on cabinet height (optional on H9A11 cabinet)
- Factory Integration
- Ballast kits as required

M-series Cabinet Configuration Chart for AlphaStation XP1000 (5U) with Storage Works shelves (4U)

Cabinet	Mounting Kit	Cabinet Height / Space	System	Shelves	Ballast Kit
H9A11-MC/MD	SN-BA26R-RA – Optional, must be ordered separately	35 in (88.9 cm) / 20U	1	3	1
			2	2	0
				1	0
			4	0	0
H9A10-MC/MD	SN-BA26R-RA – Optional, must be ordered separately	54.2 in (137.67 cm) / 31U	1	6	2
			2	5	1
			3	4	0
			4	2	0
			5	1	0
			6	0	0
H9A15-MC/MD	SN-BA26R-RA – Optional, must be ordered separately	66.5 in (168.91 cm) / 38U	1	6	2
			1	6	2
			3	5	0
			4	4	0
			5	3	0
			6	2	0
			7	0	0

Options

Step 10 – AlphaStation XP1000 Rackmount Options *(continued)*

M-series Cabinets

43 in (109.22 cm) cabinet enclosure with 35 in (88.9 cm) or 20U of usable vertical space; 120V 24A controller with 10 NEMA 5-15R outlets, input power plug NEMA L5-30P, Americas, Asia Pacific; includes rear door, H7600-AA power distribution unit, trim kit, and front filler bezel kit	H9A11-MC
43 in (109.22 cm) cabinet enclosure with 35 in (88.9 cm) or 20U of usable vertical space; 240V 16A controller with 12 IEC C13 outlets, input power plug IEC 309, 16A, Europe; includes rear door, H7600-DB power distribution unit, trim kit, and front filler bezel kit	H9A11-MD
67 in (170.18 cm) cabinet enclosure with 54.2 in (137.67 cm) or 33U of usable vertical space; 120V dual-24A controller, each with 10 NEMA 5-15R outlets, input power plug NEMA L5-30P, Americas, Asia Pacific; includes rear door, top fan tray, and two H7600-AA power distribution units	H9A10-MC
67 in (170.18 cm) cabinet enclosure with 54.2 in (137.67 cm) or 33U of usable vertical space; 240V dual-16 A controller, each with 12 IEC C13 outlets, input power plug IEC 309, 16A, Europe; includes rear door, top fan tray, and two H7600-DB power distribution units	H9A10-MD
79 in (200.66 cm) cabinet enclosure with 66.5 in (168.91 cm) or 40U of usable vertical space; 120V dual-24A controller, each with 10 NEMA 5-15R outlets, input power plug NEMA L5-30P, Americas, Asia Pacific; includes rear door, top fan tray, and two H7600-AA power distribution units	H9A15-MC
79 in (200.66 cm) cabinet enclosure with 66.5 in (168.91 cm) or 40U of usable vertical space; 240V dual-16A controller, each with 12 IEC C13 outlets, input power plug IEC 309, 16A, Europe; includes rear door, top fan tray, and two H7600-DB power distribution units	H9A15-MD

Note: For more information on M-series Cabinet Enclosures: http://www.compaq.com/alphaserver/products/m-series/index.html **Note**: This Web site is available in English only.

Cabinet Front Door

Top gun blue front door for H9A10-MC/MD cabinet	H9C10-TF
Top gun blue front door for H9A15-MC/MD cabinet	H9C15-TF
Top gun blue front door for H9A11-MC/MD cabinet; selection of front door for H9A11 is optional, cabinet includes front trim kit and filler bezel	H9C11-EB

Shelves supported in M-series Cabinets with front doors (H9A10/M9A15)

StorageWorks UltraSCSI single bus, single-ended shelf with 180W power supply and RETMA mounting kit	BA36R-RC
StorageWorks UltraSCSI split bus, single-ended shelf with 180W power supply and RETMA mounting kit	BA36R-RD
StorageWorks controller shelf with RETMA mounting kit and NEMA power for H9A10-MC, H9A15-MC cabinets (Americas, Asia Pacific); order BN30B-02 power cord for H9A10-MD, H9A15-MD cabinets (Europe)	BA35R-MR
180W power supply	CK-BA35X-HH

Shelves supported in M-series Cabinets with trim kit (H9A11)

StorageWorks UltraSCSI single bus, single-ended shelf with 180W power supply and RETMA mounting kit, blue bezel	BA35C-AA
StorageWorks UltraSCSI split bus, single-ended shelf with 180W power supply and RETMA mounting kit, blue bezel	BA35C-BA

Factory Integration

Factory Integration of systems and storage devices assembled and configured in cabinet enclosure for H9A10/15 cabinet enclosures	YS-ASCAA-AA
Factory Integration of systems and storage devices assembled and configured in cabinet enclosure for H9A11 cabinet enclosures	YS-ASCAA-AB

Options

Step 10 – AlphaStation XP1000 Rackmount Options *(continued)*

Ballast Kit

- Ballast is dead weight added to a cabinet at specific locations for specific configurations to meet safety regulations for installation, operation, and service; see "Cabinet Configuration Chart" for ballast kit requirements

Two 35-40 lb steel plates	H9C10-MC

For more information on M-series Cabinet Enclosures: http://www.compaq.com/alphaserver/products/m-series/index.html **Note**: This Web site is available in English only.

Rackmount Power Cords

North America, 4.5 m	BN20Z-4E
Non-North America, 4.5 m	3X-BN46L-4E
Japan, Dentori approved, 4.5 m	3X-BN46D-4E

Compaq *Custom*Systems Support

- Cabinets containing systems and storage must be assembled by qualified assemblers: Compaq Manufacturing, Compaq *Custom*Systems Group, or an authorized Compaq Certified Integration Partner
- For custom integration of systems, options, and additional Compaq and third-party devices, or for other cabinets, doors, and trim kits of a different color, contact Compaq *Custom*Systems at 1-800-AT-COMPAQ (1-800-282-6672), or contact your local authorized Compaq Certified Integration Partner

Step 11 – XP1000 Field Upgrade Option

XP1000 500-MHz CPU upgrade to XP1000 667-MHz CPU for Tru64 UNIX, OpenVMS, and Linux-Ready systems	SN-E2G6W-UG

Step 12 – Hardware and Software Supplemental Services

Hardware Supplemental Services

3-year 5 x 9 Next Business Day Onsite XP1000/667 warranty uplift (must purchase within 90 days of system purchase)	FM-AWXHW-36
3-year 5 x 9 Same Day – 4-hour Response Onsite XP1000/667 warranty uplift (must purchase within 90 days of system purchase)	FM-AW4HR-36
3-year 7 x 24 Same Day – 4-hour Response Onsite XP1000/667 warranty uplift (must purchase within 90 days of system purchase)	FM-AW724-36
In Warranty XP1000/667 service upgrade for 1st year to 5x9 Next Business Day	FS-CPQ05-WJ
In Warranty XP1000/667 service upgrade for 2nd or 3rd years to 5x9 Next Business Day	FS-CPQ05-WK
Post Warranty XP1000/667 service – 5 x 9 Next Business Day	FS-CPQ05-35
XP1000/667 Hardware Installation	FM-AWINS-IN

Software Supplemental Services

- For a complete list of available service offerings, contact a local Compaq sales representative or call Compaq directly at 1-800-344-4825 in the US and Canada; outside North America, call +353 91 704105 for the number of a local Compaq Information Center.

Options

Step 12 – Hardware and Software Supplemental Services *(continued)*

Tru64 UNIX

12 Month 7 x 24 Bronze Software Supplemental Support Services	FM-3BUNS-12
36 Month 7 x 24 Bronze Software Supplemental Support Services	FM-3BUNS-36
60 Month 7 x 24 Bronze Software Supplemental Support Services	FM-3BUNS-60
12 Month 5 x 9 Bronze Software Supplemental Support Services	FM-3BUN5-12
36 Month 5 x 9 Bronze Software Supplemental Support Services	FM-3BUN5-36
60 Month 5 x 9 Bronze Software Supplemental Support Services	FM-3BUN5-60

Step 13 –Software and User Documentation

- Processor Code: E

Tru64 UNIX

- Tru64 UNIX systems include Tru64 UNIX base license and 2-user license

When using Tru64 UNIX V5.0A or later

Tru64 UNIX media and online documentation on CD-ROM	QA-6ADAA-H8
Tru64 UNIX full hard copy documentation	QA-6ADAA-GZ
Tru64 UNIX end-user documentation	QA-6ADAB-GZ
Tru64 UNIX Unlimited User License	QL-MT7AE-AA
Open Source Internet Solutions for Tru64 UNIX	QB-3NCAA-SA
StorageWorks Software Package with licenses for Logical Storage Manager and AdvFS Utilities	QB-5RXAE-AA
Layered products media and documentation for Tru64 UNIX on CD-ROM	QA-054AA-H8
Open3D for Tru64 UNIX on CD-ROM, includes graphics drivers	QA-0AFAA-H8

When using Tru64 UNIX V4.0G or earlier

Tru64 UNIX media and online documentation on CD-ROM	QA-MT4AA-H8
Tru64 UNIX full hard copy documentation	QA-MT4AA-GZ
Tru64 UNIX Unlimited User License	QL-MT7AE-AA
Open Source Internet Solutions for Tru64 UNIX	QB-3NCAA-SA
StorageWorks Software Package with licenses for Logical Storage Manager and AdvFS Utilities	QB-5RXAE-AA
Layered products media and documentation for Tru64 UNIX on CD-ROM	QA-054AA-H8
Open3D for Tru64 UNIX on CD-ROM, includes graphics drivers	QA-0AFAA-H8

Options

Step 13 –Software and User Documentation *(continued)*

OpenVMS

- OpenVMS systems include OpenVMS Alpha Base license, OpenVMS Concurrent Use 1-user license, NAS Client 150 Traditional License, MMS Runtime License, and Open 3D for Open VMS License. NAS 150 enables the following OpenVMS Software Products: DECwindows Motif, DECnet End System, DECnet/OSI End Node, TCP/IP Client, and OpenVMS Cluster Client software.
- OpenVMS Concurrent Use Licenses are not specific to a single system and can be moved between systems at user discretion. OpenVMS Concurrent Use Licenses can also be shared in a mixed OpenVMS VAX and OpenVMS Alpha Cluster. The OpenVMS traditional unlimited use license is system specific and can only be used on a single system at a time. It cannot be shared between systems or used in an OpenVMS VAX or OpenVMS Alpha Cluster.

OpenVMS V7.2-1 base media on CD-ROM	QA-MT1AT-H8
OpenVMS V7.1-2 media and on-line documentation on CD-ROM	QA-MT1AA-H8
OpenVMS hard copy documentation	QA-001AA-GZ
Layered products media and documentation for OpenVMS on CD-ROM	QA-03XAA-H8
DIGITAL Open3D for OpenVMS on CD-ROM, includes graphics drivers	QA-0ADAA-H8
OpenVMS Concurrent Use 1-user license	QL-MT3AA-3B
OpenVMS Concurrent Use 2-user license	QL-MT3AA-3C
OpenVMS Concurrent Use 4-user license	QL-MT3AA-3D
OpenVMS Concurrent Use 8-user license	QL-MT3AA-3E
OpenVMS Concurrent Use 16-user license	QL-MT3AA-3F
OpenVMS Concurrent Use 32-user license	QL-MT3AA-3G
OpenVMS Concurrent Use 64-user license	QL-MT3AA-3H
OpenVMS Concurrent Use 128-user license	QL-MT3AA-3J
OpenVMS Concurrent Use 256-user license	QL-MT3AA-3K
OpenVMS traditional unlimited user license	QL-MT2AE-AA

User Documentation

Compaq AlphaStation XP1000 Installation and Setup Guide in seven languages: English, French, German, Japanese, Spanish, Italian, Dutch	EK-XP100-SI
XP1000 Service Guide (CD-ROM)	QA-6G3AA-G8

Technical Specifications

System Unit

Dimensions (HxWxD)	
Deskside Cabinet	16 x 8.6 x 17.5 in/41 x 22 x 44.8 cm
Shipping Carton	23.4 x 20.5 x 15.4 in/59.4 x 52.1 x 39 cm
Weight	
With drive cage and one hard drive installed	41 lbs/18.6 kg
Shipping weight	49 lbs/22.2 kg
Power Supply, Auto Ranging	
Nominal Range	100-132 VAC/230 VAC
Operating Range	90-132 VAC/180-264 VAC
Nominal Frequency	60 Hz/60 Hz
Operating Frequency	47 to 63 Hz
Maximum Input Current	100-120 range 6.5 arms/200-240 range 3.3 arms
Temperature Range	
Operating	50° to 104°F/10° to 40°C
Non-operating	–40° to 151°F/–40° to 66°C
Relative Humidity (non-condensing)	
Operating	20% to 80%
Non-operating	10% to 90%
Maximum Altitude (non-pressurized)	
Operating	10,000 ft/3,048 m
Non-operating	40,000 ft/12,192 m
Power Consumption	
Typical	215 W/733 Btu/hr

(C)2001 Compaq Computer Corporation. All rights reserved. Compaq is a trademark of Compaq Computer Corporation. The information in this publication is subject to change without notice. Printed in Canada.