Overview

AT A GLANCE

AlphaServer GS60E Systems include:

- Processor module with two Alpha 21264A 6/700-MHz CPUs, each with 8-MB L2 cache
- System I/O module with four I/O channels
- 1-GB or 4-GB memory
- PCI Shelf Mount Box
- 10/100 Mb Fast Ethernet network interface card
- UltraSCSI 1-port Single-ended adapter
- UltraSCSI 16-bit StorageWorks shelf with power supply and 1-m SCSI cable
- 9.1-GB UltraSCSI disk drive
- 600-MB CD-ROM drive
- PCI SCSI controller and 2-m SCSI cable for connection to CD-ROM
- 3-phase power system with power cord
- Redundant 48 VDC hot swappable power supplies to power CPU, memory, I/O, and PCI shelves
- 120/240 Vac power for StorageWorks shelves
- Shielded console cable for connection to console terminal
- Tru64™ UNIX or OpenVMS Factory Installed Software
- 90-day software product warranty
- Protected by Compaq Services, including one-year, on-site, four-hour response warranty; system installation must be ordered separately

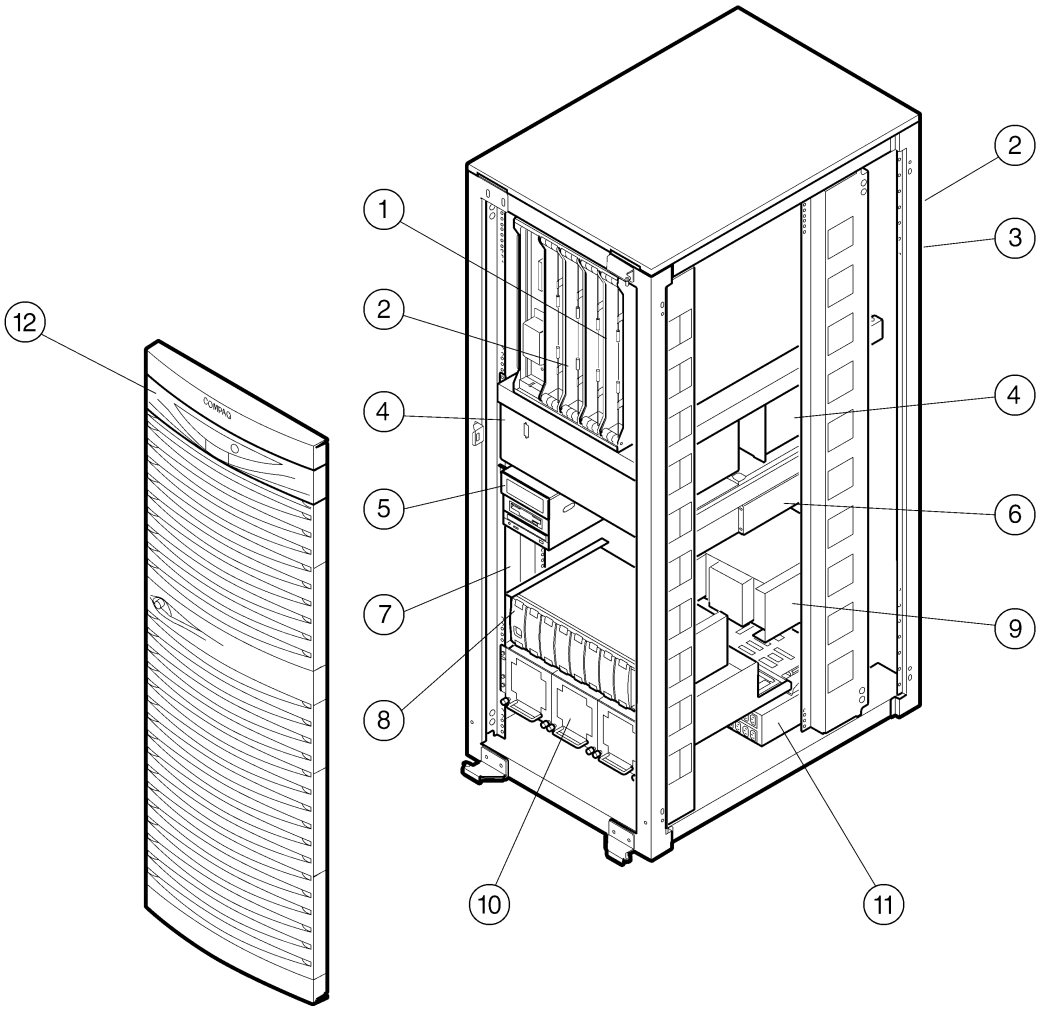

1. CPU module (front/rear)
2. Memory module (front/rear)
3. I/O module (rear)
4. Blowers
5. CD-ROM and optional diskette drive
6. PCI box (rear mount)
7. Space for second PCI box
8. StorageWorks shelf
9. Space for second StorageWorks shelf
10. 48 VDC power regulator (3)
11. AC distribution panel
12. Door and operator control panel (OCP)

Standard Features

Processor

Two Alpha 21264A 6/700-MHz processors (two CPUs per module)

Cache Memory

8-MB ECC L2 onboard cache per 6/700-MHz CPU

Architecture

64-bit bus-based system architecture with seven system bus slots for CPU, memory, and I/O modules (1.87-GB/sec sustained system bandwidth; 2.1-GB/second peak bandwidth)

Upgradability

In-cabinet upgrades support additional processors, additional memory, additional I/O port modules, as well as storage and PCI I/O module options; upgrades available to AlphaServer GS140 for added expansion

Standard	2 CPUs on one CPU module
Maximum	8 CPUs on four CPU modules

System I/O Module and System I/O Expansion

System I/O module with four I/O channels (KFTHA-AA)

Standard	1
Maximum	3

RETMA PCI shelf mount box (DWLPB-DA)

Standard	1
Maximum	11 (with I/O Expansion Cabinets)

Memory

Standard	1 GB or 4 GB on one memory module
Maximum	20 GB

Network Controller

PCI 10/100 Mb Fast Ethernet adapter UTP

Expansion

Internal Drive Bays	7 to 28 available internal to system cabinet; up to 84 drive bays with I/O expansion cabinet
Total PCI I/O Slots	Up to 132 PCI I/O slots total with System and I/O Expansion Cabinets available and no internal storage (120 PCI I/O slots with internal storage and 10 DWLPB-DA PCI I/O buses)
PCI	12-24 internal to System Cabinet

Storage

CD-ROM	5.25″ half height CD-ROM drive
Hard Drives	9.1-GB UltraSCSI disk drive (included); 18.2-GB, 36.4-GB UltraSCSI disk drives available
Diskette Drive	Optional with Graphics Subsystem (3X-KFE72-LA)
Maximum Internal Storage	1019.2 GB (36.4-GB disk drives)

Storage Controller/Shelf

UltraSCSI 1-port Single-ended adapter (KZPBA-CA)

UltraSCSI 16-bit StorageWorks shelf (BA36R-RC) and 1-m SCSI cable, VHDCI male-to-68 HD male (BN38C-01)

Power

Redundant 48 VDC hot-swappable power supplies

Optional standalone UPS with added backup runtime for systems and external devices available

Intelligent Manageability

Compaq Insight Manager

Standard Features

Security

Chassis on/off key lock

Multi-boot for choice of boot device

OS Support

AlphaServer GS60E Tru64 UNIX systems include pre-installed software, Base license, Unlimited User license, Server Extension license, Open Source Internet Solutions, and iPlanet Web Server – Enterprise Edition 4.0.

AlphaServer GS60E OpenVMS systems include pre-installed software, Base license and Enterprise Integration Server License Package V3.0A.

Support is available for up to two instances of either Tru64 UNIX or OpenVMS on a single hardware platform

OS support: Tru64 UNIX V4.0E, V4.0F, V4.0G, V5.0, or V5.0A or later or OpenVMS V7.1-2, or V7.2-1 or later

Service and Support

Protected by Compaq Services, including a one-year, on-site hardware warranty with four-hour response. Software warranty is a 90-day telephone advisory. Training, consulting, network integration, software support, comprehensive system maintenance and guaranteed uptime services are also available for customers requiring higher levels of service and support.

Systems/Options

Step 1 –Select system

GS60E systems require the **mandatory** selection of the following items:

- Software media and documentation for first system on-site
- Serial console terminal (unless available on site)
- Installation and/or startup services

Notes: Minimum OS support: Tru64 UNIX V4.0E or later or OpenVMS V7.1-2 or V7.2-1 or later
For system integration of any options with 6-3 part numbers, contact *Custom*Systems.

OS	CPUs	Memory	UltraSCSI Disk	UltraSCSI Adapter	Ethernet Adapter	Order No.
Tru64 UNIX	Two 6/700 MHz	1 GB	9.1 GB	KZPBA-CA	DE500-BA or 3X-DE600-AA	DA-484GE-AA/AB
Tru64 UNIX	Two 6/700 MHz	4 GB	9.1 GB	KZPBA-CA	DE500-BA or 3X-DE600-AA	DA-484GG-AA/AB
OpenVMS	Two 6/700 MHz	1 GB	9.1 GB	KZPBA-CA	DE500-BA or 3X-DE600-AA	DY-484GE-AA/AB
OpenVMS	Two 6/700 MHz	4 GB	9.1 GB	KZPBA-CA	DE500-BA or 3X-DE600-AA	DY-484GG-AA/AB

Note: -AA = 120/208V US/Canada; 202V Japan
-AB = 380-415V Europe, 50/60 Hz

Step 2 – Additional CPU Modules (SMP Expansion) – Optional

- Maximum three additional CPU modules per system for a system total of four (up to eight CPUs)
- All CPU modules must be at same speed on same bus
- For systems with more than two processor modules, a minimum of two memory modules is recommended
- Options include processor module with Alpha microprocessors, SMP extension license, and end-user product warranty
- To order a system with added CPUs for future expansion, refer to the Compaq Capacity on Demand (CCoD) Program described in the "Upgrades" section

6/700 dual-CPU module (Tru64 UNIX)	3X-764P2-AX
6/700 dual-CPU module (OpenVMS)	3X-764P1-AX

Step 3 – Memory – Optional

- Maximum 20-GB memory
- Both 1-GB and 2-GB memory modules have built-in, 2-way interleaving; additional interleaving is accomplished with the addition of more memory modules.
- 4-GB memory modules have built-in, 4-way interleaving; optimal performance is achieved when two 2-GB memory modules are paired with one 4-GB module or one 4-GB module is paired with another 4-GB module.

4-GB memory module	MS7CC-GA
2-GB memory module	MS7CC-FA
1-GB memory module	MS7CC-EA

Options

Step 4 – I/O Expansion Buses – Optional

RETMA PCI shelf mount box for system and I/O expansion cabinets (included) with 12 PCI slots and required cable for connection to KFTHA-AA I/O channel; maximum of two per System Cabinet with one StorageWorks shelf standard; see "Step 16 – Expansion: System Cabinet and I/O Expansion Cabinet" for more details	DWLPB-DA

Note: DWLPA options are not supported on GS60E systems.

Graphics subsystem and diskette, includes two asynchronous serial ports, parallel port, keyboard and mouse ports, diskette drive, extension cables for video, keyboard, and mouse. **Note**: Option required to support KZPAC-AA/CA RAID controllers – diskette drive is required to run the RAID Configuration Utility and to support hardware partitioning.	3X-KFE72-LA

Step 5 – System I/O Modules – Optional

- Systems support a maximum of 11 I/O channels with three KFTHA-AA modules installed and no internal storage, and 10 I/O channels with internal storage.

System I/O module (included) with four I/O channels for DWLPB-DA shelf mount boxes, maximum three per system	KFTHA-AA

Step 6 – Storage Controllers – Optional

- Tru64 UNIX V4.0E or later supports eight KZPBA-Cx SCSI controllers per PCI, maximum 64 per system
- OpenVMS V7.1.2 or later supports eight KZPBA-Cx SCSI controllers per PCI, maximum 26 per system
- Tape and optical devices not supported with KZPAC SCSI RAID controllers
- For cluster configurations, use Y cable (BN39A-0G) or SCSI Hub (BA35X-03/05)
- Manufacturing may substitute correct cable lengths depending on configuration

	Maximum # Supported		
	Tru64 UNIX	OpenVMS	
	PCI/System	PCI/System	
PCI Fibre Channel adapter (DS-KGPSA-CA) (uses one PCI slot); requires Tru64 V4.0F (maximum 62) or V5.0A (maximum 63) or OpenVMS V7.2-1; requires Fibre Channel cable. (DS-KGPSA-CA adapter is used with HSG60 and HSG80 Fibre Channel controllers.) FC-AL is not supported on these platforms. For best performance, configure up to three adapters per DWLPB, one per segment. For most connections, configure up to eight per DWLPB — no segment restrictions.	8/63	8/8	168794-B21
Fibre Channel cable (BNGBX-xx) xx = 02, 05, 15, 30, 50 meters x = 1, 2, 3, 4, 5			234457-B2x
PCI Fibre Channel tape controller (SCSI-to-Fibre) 1 Fibre x 1 SCSI, GLM			340654-001
PCI Fibre Channel tape controller (SCSI-to-Fibre) 1 Fibre x 2 SCSI, GBIC			152975-001

Note: Complete cluster support available only with Veritas Net Backup

PCI 1-port UltraSCSI Single-ended host adapter (uses one PCI slot)–included	8/64	8/26	KZPBA-CA
PCI 1-port UltraSCSI Differential host adapter (uses one PCI slot); OpenVMS V7.1-1H1 or later supports multi-host SCSI clusters, requires BN38C-xx cable	8/64	8/26	KZPBA-CB
VHDCI male-to-68-pin HD male UltraSCSI cable, x = 01, 02, 03, 05 meters			BN38C-xx

PCI 1-port RAID (FWSE) controller (UltraSCSI ready) with 4-MB cache memory (uses one PCI slot) allows RAID levels 0, 0+1, 1, and 5; includes RAID Array 230/plus subsystem software and documentation kit; 3X-KFE72-LA option required to run RCU; tape and optical drives not supported	4/4	4/4	KZPAC-AA
PCI 3-port RAID (FWSE) controller (UltraSCSI-ready) with 4-MB cache memory (uses 2 PCI slots) allows RAID levels 0, 0+1, 1, and 5; includes RAID Array 230/plus subsystem software and documentation kit; 3X-KFE72-LA option required to run RCU; tape and optical drives not supported; requires BN31K-0E or KZPAC-SB for third port connection	4/4	4/4	KZPAC-CA

Options

Step 6 – Storage Controllers – Optional *(continued)*

	Maximum # Supported		
	Tru64 UNIX	OpenVMS	
	PCI/System	PCI/System	
PCI 3-port RAID (FWSE) controller (UltraSCSI-ready) with 8-MB cache memory (uses two slots) allows RAID levels 0, 0+1, 1, and 5; includes RAID Array 230/plus subsystem software and documentation kit; 3X-KFE72-LA option required to run RCU; tape and optical drives not supported; requires BN31K-0E or KZPAC-SB for third port connection	4/4	4/4	KZPAC-CB
SCSI cable/bulkhead assembly kit with two ports for KZPAC-CA/CB; allows connection of one third port outputs using one PCI bulkhead slot			KZPAC-SB
SCSI cable/bulkhead assembly kit with one port for KZPAC-CA/CB, allows connection of one third port output using one PCI bulkhead slot			BN31K-0E
1-m VHDCI male-to-VHDCI male UltraSCSI cable, connects KZPAC to rear-mounted StorageWorks shelf			BN37A-01
2-m VHDCI male-to-VHDCI male UltraSCSI cable, connects KZPAC to front-mounted StorageWorks shelf			BN37A-02
Battery backup for cache memory option for KZPAC controller, recommended for all KZPAC controllers			KZPSC-UB
8-MB cache memory option			MS100-BB
PCI CI adapter, requires two slots for adapter and power	-	4/26	CIPCA-AA
Same as CIPCA-AA except uses two PCI slots for adapter	-	4/26	CIPCA-BA
Computer interconnect cable sets; connects CIPCA to Star Coupler; select length—10, 20, 45 m			BNCIA-xx

Step 7 – External Storage Controllers – Optional

- HSZ80 UltraSCSI RAID Array controllers are supported under Tru64 UNIX V4.0E or later or OpenVMS V7.1-2 or later
- HSG80 Fibre Channel controllers require Tru64 UNIX V4.0F or later or OpenVMS V7.2-1 or later
- HSG60 Fibre Channel controllers require Tru64 UNIX V4.0F or later or OpenVMS V7.2-1 or later (standalone and cluster support); order one HSG60 ACS Software Kit per HSG60
- HSJ50 CI Storage Array Controllers are supported under OpenVMS V6.2-1H3 or later with CIPCA-AA/BA or CIXCD-AC CI controllers; QB-5C4AA-SA software kits are required for each external cache (one for HSJ50, two for HSJ52, four for HSJ54)
- Controllers require KZPSA, KZPBA, KFPSA, or CIPCA SCSI adapters or controllers, as appropriate

Fibre Channel controller (HSG80), includes 256-MB cache expandable to 512 MB; requires 128697-B21 HSG80 ACS V8.4F software kit or 128698-B21 V8.4P software kit for each HSG80 ordered	380672-B21
Fibre Channel controller (HSG60), includes 256-MB cache expandable to 512-MB; requires 180319-B21 HSG60 ACS V8.5L software kit (QB-6FTAA-SA) for each HSG60 ordered	174134-B21
HSG60 Tru64 UNIX Software Kit (QB-6J4AB-SA)	192211-B21
HSG60 OpenVMS Software Kit (QB-6J4AC-SA)	192217-B21
256-MB Cache Option for HSG60 (DS-HSD1M-AC)	380674-B21
UltraSCSI controller (HSZ80), includes 64-MB cache expandable to 128 MB; requires 400569-001 for Tru64 UNIX or 400571-001 for OpenVMS	400564-B21
UltraSCSI controller (HSZ80), includes 256-MB cache expandable to 512 MB; requires 400569-001 for Tru64 UNIX or 400571-001 for OpenVMS	400565-B21
32-MB 6-channel CI array controller with cache battery	HSJ50-AF
64-MB cache 6-channel CI array controller with cache battery	HSJ50-AH
128-MB cache 6-channel CI array controller with cache battery	HSJ50-AJ
Dual 64-MB cache CI array controller with cache batteries	HSJ52-AF
Dual 128-MB cache CI array controller with cache batteries	HSJ52-AH
Dual 256-MB cache CI array controller with cache batteries	HSJ52-AJ
Quad 512-MB cache CI array controller with cache batteries	HSJ54-AJ

Options

Step 8 – Storage Devices – Optional

- When multiple storage devices are configured with the system, specify which devices should be installed inside the system cabinet, inside the system expansion cabinet, or installed in the external StorageWorks cabinet. Line item sequencing allows Manufacturing to configure storage options in the appropriate cabinet.
- List storage options to be integrated in system cabinet immediately following system part number.
- List storage options to be integrated in StorageWorks cabinet immediately following StorageWorks cabinet part number.

Internal Storage

- System cabinet provides space for up to four BA36R-RC/RD StorageWorks shelves; each shelf holds a maximum of two 5.25″ devices and one 3.5″ device or seven 3.5″ devices.
- System cabinet includes one UltraSCSI StorageWorks shelf (BA36R-RC) and one PCI shelf (DWLPB-DA).

UltraSCSI Options

- Each UltraSCSI StorageWorks shelf requires SCSI controller and SCSI cable to connect controller to shelf; refer to UltraSCSI Configuration Guidelines (EK-ULTRA-CG.C01).

UltraSCSI single-channel StorageWorks shelf (included) with 16-bit I/O personality module (DS-BA35X-FA), 180W AC power supply, DC fans, RETMA rackmounting hardware; supports 16-bit UltraSCSI devices and some 8-bit narrow SCSI devices depending on compliance with minimum revision levels	BA36R-RC
UltraSCSI dual-channel StorageWorks shelf, includes 16-bit I/O personality module (DS-BA35X-FB), 180 W AC power supply, DC fans, RETMA rack-mounting hardware; supports 16-bit UltraSCSI devices and some 8-bit narrow SCSI devices, depending on compliance with minimum revision levels.	BA36R-RD

Power Option for BA36R Shelves

- An additional power supply provides N+1 power for StorageWorks shelves; power supply uses 3.5″ slot in StorageWorks shelf, reducing total number of devices supported by one.

180W 100/120 VAC Redundant Power Supply for StorageWorks shelf; power cords included	CK-BA35X-HH

SCSI Signal Converter

UltraSCSI StorageWorks DOC Signal Converter, required to convert FWD signals from KZPBA-CB to single-ended for connection to DS-BA35X-FA personality module in Storage-Works shelf, field installed only	DS-BA35X-DA
Fast20 Personality Module for BA356 single-ended-to-single-ended 1-channel, field installed only	DS-BA35X-FA
Fast20 Personality Module for BA356 single-ended-to-single-ended 2-channel, field installed only	DS-BA35X-FB
Cable for above	BN38C-02

UltraSCSI Hubs

- UltraSCSI hubs are supported with KZPBA-CB PCI differential SCSI adapters.

UltraSCSI Hub with three differential ports (two host ports and one storage port), no single-ended ports, in 3.5″ SBB, UltraSCSI cables not included	DS-DWZZH-03
UltraSCSI Hub with five differential ports, no single ended ports, consists of four host ports and one storage port in 5.25″ SBB, UltraSCSI cables not included	DS-DWZZH-05
UltraSCSI Hub with one differential port and two single-ended ports in 3.5″ SBB, UltraSCSI cables not included	DS-DWZZH-21

16-bit Wide Drives

- For 10,000 rpm disk drives, maximum six 18-GB or larger capacity disk drives when used in any BA356 blue shelf; 5.25” devices not supported on same bus

36.4-GB 10,000 rpm 16-bit UltraSCSI disk drive SBB (not supported on KZPAC controllers)	DS-RZ1FC-VW
18.2-GB 10,000 rpm 16-bit UltraSCSI disk drive SBB (not supported on KZPAC controllers)	DS-RZ1ED-VW
18.2-GB 7,200 rpm 16-bit UltraSCSI disk drive SBB (not supported on KZPAC controllers)	DS-RZ1EA-VW
9.1-GB 10,000 rpm 16-bit UltraSCSI disk drive SBB	DS-RZ1DD-VW
9.1-GB 7,200 rpm 16-bit UltraSCSI disk drive SBB	DS-RZ1DA-VW

Options

Step 8 – Storage Devices – Optional *(continued)*

Tape Devices

- Tape drives not supported with KZPAC RAID controller

8-GB DAT 3.5″ SCSI tape drive in StorageWorks carrier; requires OpenVMS V6.2-1H3 or later or Tru64 UNIX V3.2C or later and System Console Firmware Revision 3.0-9	TLZ09-VA
32/64-GB DAT tape loader in StorageWorks carrier	TLZ9L-VA
12/24-GB 4mm DAT SCSI tape drive in StorageWorks carrier	DS-TLZ10-VA
20/40-GB DLT SCSI tape drive in 5.25″ StorageWorks carrier	TZ88N-VA
35/70-GB DLT SCSI tape drive in 5.25″ StorageWorks carrier	DS-TZ89N-VW
40/80-GB DLT SCSI tape drive in 5.25″ StorageWorks carrier; requires Tru64 UNIX V4.0F, TruCluster V1.5 or OpenVMS V7.1 or later	DS-TZ90N-VW

Solid State Disks

- Supported with KZPBA controller
- Solid state disks cannot be combined with RZxx disks/tapes on same SCSI bus
- 3.5″ and 5.25″ solid state disks not supported on same SCSI bus

1.6-GB Fast20 5.25″ Ultra solid state disk	DS-EZ716-VW

RAID Storage Systems

- ESA 12000 Storage Arrays and RAID Array 8000 (HSG80/HSZ80) product sets are supported on Tru64 UNIX and OpenVMS systems.
- ESA 10000 Storage Arrays and RAID Array 7000 (HSZ70 Product Set) are supported on Tru64 UNIX and OpenVMS systems.
- Ordering and configuring information is available at www.compaq.com/products/storageworks/ Please note that this Web site is available in English only.

External Storage Devices

The following devices can be added as required:

SW5XX, SW6XX, SW8XX Storage Cabinets

SCSI Disk Drives

Tape Drives

TZ87, TZ857 (loader support for Tru64 UNIX available via DECnsr), TZ877, TZ88, TZ885, TZ887, TSZ07, TLZ09, TKZ9E , TKZ9F, TLZ9L, TKZ6x, TL810, TL812, TL820, TL822, TL826, DS-TL893-BA, DS-TL894-BA, DS-TL896-BA, DS-TLZ10-VA, DS-TL895-xx

Options

Step 9 – Networks and Communications – Optional

- Connection of system to Ethernet requires twisted-pair cable, except when using DE500-FA
- Requires DWLPB-DA PCI shelf mount box (one included)
- Maximum of six 3X-DEFPA-AC/DC/UC/MC FDDI controllers (100 Mb/sec) per system
- Each adapter/controller uses one PCI slot

	Maximum # Supported		
	Tru64 UNIX	OpenVMS	
	PCI/System	PCI/System	
Universal PCI to FDDI controller Fibre—Single attachment station (SAS) MultiMode Fibre (MMF) with SC; requires BN34x SC type connecting cable	6	6	3X-DEFPA-AC
Universal PCI to FDDI controller Fibre—Dual attachment station DAS) MultiMode Fibre (MMF) with SC; requires BN34x SC type connecting cable	6	6	3X-DEFPA-DC
MultiMode Fibre Optic Duplex cable, SC connector-to-ST connector			BN34A-xx
MultiMode Fibre Optic Duplex cable, SC connector-to-SC connector			BN34B-xx
MultiMode Fibre Optic Duplex cable, SC connector-to-MIC connector			BN34D-xx
Universal PCI to FDDI controller, copper, Dual Attachment Station (DAS) CAT 5 UTP with RJ; requires BN26x or BN25H connecting cables	6	6	3X-DEFPA-MC
Universal PCI to FDDI controller, copper, Single Attachment Station (SAS) CAT 5 UTP with RJ; requires BN26x or BN25H connecting cables	6	6	3X-DEFPA-UC
8-pin MP-to-8-pin MP, screened, EIA/TIA category 5 cable			BN26M-xx
8-pin MP-to-8-pin MP, screened, crossover, EIA/TIA category 5 cable			BN26S-xx
3-m unshielded twisted pair RJ-45 connectors			BN25H-03
PCI 1-port 10/100-Mb Ethernet adapter (Twisted Pair); SN-PBXNP-AC (Token Ring Adapter) not supported in same system; requires NHD1 of Tru64 UNIX. (UCX v4.2 TCP/IP Services Software not recommended for use with DE60* devices – TCP/IP V5.0 is recommended.)	8/8	8/8	3X-DE600-AA
Category 5 cross-over cable for point-to-point, unshielded			BN24Q-xx
Category 5 cross-over cable for point-to-point, shielded			BN28Q-03
Category 5 straight through for system to repeater or hub, unshielded			BN25G-xx
Twisted pair, shielded (-03, -04, -07 available lengths)			BN26M-xx
PCI Gigabit Ethernet adapter, one per DWLPB, does not support network boot	1/4	1/4	DEGPA-SA
PCI-to-ATMworks 155 Mb Fibre adapter, Tru64 UNIX and appropriate patch kits (patch kit 1 for V4.0F; patch kit 2 for V4.0E) required; refer to http://www.service.digital.com for patch kit availability, SN-PBXNP-AC PCI Token Ring Adapter is not supported in same system with ATM 155 (DAPBA) adapter; if ATMworks 351 (DGLPA) NIC card is installed, follow that adapter's configuration rules; only one ATM adapter can be installed on same bus as ATMworks 351 network interface card	6	-	3X-DAPBA-FA
Same as above except UTP	6	-	3X-DAPBA-UA

Options

Step 9 – Networks and Communications – Optional *(continued)*

	Maximum # Supported		
	Tru64 UNIX	OpenVMS	
	PCI/System	PCI/System	
PCI-to-ATMworks 622 Mb Fibre adapter – Tru64 UNIX and appropriate patch kits (patch kit 1 for V4.0F; patch kit 2 for V4.0E) required; refer to http://www.service.digital.com for patch kit availability–SN-PBXNP-AC PCI Token Ring Adapter is not supported in same system with ATM 622 (DAPCA) adapter; if ATMworks 351 (DGLPA) NIC card is installed, follow that adapter's configuration rules; only one ATM adapter can be installed on same bus as ATMworks 351 network interface card	1/2	-	3X-DAPCA-FA

PCI Asynchronous 4-port adapter, maximum two PBXDA-xx per system	2/2	2/2	PBXDA-AA
PCI Asynchronous 8-port adapter, maximum two PBXDA-xx per system	2/2	2/2	PBXDA-AB
PCI Asynchronous 16-port adapter, maximum two PBXDA-xx per system	2/2	2/2	PBXDA-AC
PCI Synchronous 2-port controller, maximum two PBXDP-xx per system; requires OpenVMS V7.1-2 or Tru64 UNIX V4.0F or V5.0A or later	2/2	2/2	PBXDP-AA
PCI Synchronous 4-port controller, maximum two PBXDP-xx per system; requires OpenVMS V7.1-2 or Tru64 UNIX V4.0x or V5.0A or later	2/2	2/2	PBXDP-AB

Note: PBXDP-AA/AB options require WAN 3.1A kit for Tru64 UNIX V5.0A or later – QA-045AA-H8 or QT-045AA-C8

Step 10 – MEMORY CHANNEL – Optional

- Up to two PCI System Area Network controllers are supported on GS60E with Console Firmware V5.5-x or later, one per PCI bus.
- The following options are not currently supported with MEMORY CHANNEL: DJ-ML200, CIPCA

Tru64 UNIX Systems (V5.0A and later)

- Each system node in the cluster requires a TruCluster Server license (QL-6BRAG-AA)

Tru64 UNIX Systems (V4.0F or V4.0G)

- Requires a minimum of Tru64 UNIX V4.0F with TruCluster V1.6 or later
- Each system node in a MEMORY CHANNEL cluster requires a TruCluster Production Server (QB-3RLAG-AA) or TruCluster MEMORY CHANNEL (QB-4ZCAG-AA) software license.
- TruCluster MEMORY CHANNEL license (QB-4ZCAG-AA), normally used for high- performance technical computing applications, is not required if systems include a TruCluster Production Server license (QB-3RLAG-AA).

OpenVMS Systems

- Requires OpenVMS V7.1-2 or later and OpenVMS Cluster license (QL-MUZAG-AA)

MEMORY CHANNEL Controller/Network Hub

- Two-node clusters can be configured by ordering a CCMAB-AA for each system and one BN39B-04 or BN39B-10 cable; cable connects directly to CCMAB-AA in each system
- For three or four system clusters, order one CCMAB-AA adapter and one BN39B-04 or BN39B-10 cable for each system and one CCMHB-AA hub for the cluster
- CCMHB-AA includes four CCMLB-AA line cards and supports up to four nodes; expansion up to eight system nodes can be achieved by adding up to four additional CCMLB-AA line cards
- If two or more CCMAB-AA controllers are configured in each system, a second CCMHB-AA hub is required for clusters with more than two nodes; in 2-node clusters the CCMAB-AA may be directly connected

Options

Step 10 – MEMORY CHANNEL – Optional *(continued)*

MEMORY CHANNEL Controller/Network Hub *(continued)*

- In cases where nodes must be separated by a longer distance than standard copper cables allow, the CCMFB option converts the output of the standard CCMAB controller or CCMLB line card to single-mode fiber optic cable. The fiber optic connection may be up to 2,000 meters long between two CCMAB controllers connected in virtual hub mode, or 3,000 meters between a CCMAB controller and a CCMHB hub. (The connection from the CCMHB hub to a second system may also be 3,000 meters). The CCMFB option requires a second PCI slot in the system from which it draws power only. It is normally connected to the corresponding CCMAB controller with the short BN39B-01 cable. The CCMFB is also used in the CCMHB hub where it occupies a slot normally used by the CCMLB line card, limiting expansion to four radial fiber optic connections.
- The CCMHB-BA hub expansion box provides additional slots for up to eight fiber optic connections. Two standard length, single-mode fiber optic cables are available (BN34R-10 and BN34R-31); however, users normally provide this connection. Customers should reference the TIA/EIA 568-A Commercial Building Telecommunications Cabling Standard, Section 12.3.4. Fiber optic connectivity is completely transparent to the systems using it and has no performance impact.

PCI System Area Network controller, maximum two per system, one per bus	CCMAB-AA
System Area Network hub with four line cards; includes BN19P-2E power cord for Canada, Japan, and U.S. operations; country-specific power cord for other regions is required.	CCMHB-AA
MEMORY CHANNEL hub expansion box with no line cards	CCMHB-BA
Expansion line card for CCMHB hub	CCMLB-AA
1-m cable for CCMAB, CCMHB, and CCMFB	BN39B-01
4-m cable for CCMAB and CCMHB	BN39B-04
10-m cable for CCMAB and CCMHB	BN39B-10
Copper-to-single mode fiber optic converter – CCMFB must reside on the same power/PCI bus as the node's PCI MEMORY CHANNEL adapter module (CCMAB) that it services. It may also reside in the same hub enclosure (up to four nodes) or a second hub enclosure (from 5-8 node utilization).	CCMFB-AA
10-m fiber optic cable	BN34R-10
31-m fiber optic cable	BN34R-31

MEMORY CHANNEL Power Cords

Australia, New Zealand	BN19H-2E
Central Europe	BN19C-2E
Denmark	BN19K-2E
Egypt, India	BN19S-2E
Ireland, United Kingdom	BN19A-2E
Israel	BN18L-2E
Italy	BN35M-02
Switzerland	BN19E-2E

Step 11 – Console Terminal – Required unless terminal is available onsite

- VT console terminal with EIA-232 25-pin DSUB connector is required, (even with KFE72 installed) for system power-up, diagnostics and console display, order unless otherwise available
- Shielded console cable included for connection to console terminal

VT510 terminal	VT510-xx

Options

Step 12 – Graphics Support for Tru64 UNIX – Optional

- Graphics support for GS60E running Tru64 UNIX V4.0E or later can be provided through combined use of 3X-KFE72-LA port option and SN-PBXGB-TL graphics adapter.
- SN-PBXGB-TL requires 17″ or 21″ Professional Series monitor and keyboard for graphics support, unless available on-site
- Selection of video extension cable and country-specific power cord required for all monitors

Graphics subsystem for Tru64 UNIX systems, includes diskette drive and mouse	3X-KFE72-LA
GSxxx/8x00 graphics adapter	SN-PBXGB-TL

Step 13 – Monitors – Optional

17″ (16″ viewable image size) professional series auto-scanning color monitor, Trinitron CRT, 0.25 mm aperture grill pitch, VGA to 1280 x 1024 at 75 Hz, TCO 95, MPR-II, Energy Star, attached 1.8-m video cable; requires video extension cable and country-specific power cord; Northern Hemisphere without power cord	3R-VRQP7-24
Same as above except Southern Hemisphere without power cord	3R-VRQP7-23
21″ (19.6″ viewable image size) auto-scanning color monitor, Trinitron CRT, 0.25 mm aperture grill pitch, VGA to 1600 x 1200 at 75 Hz NI, TCO 95, Energy Star, includes 1.8-m video cable; requires video extension cable and country-specific power cord; Northern Hemisphere without power cord	3R-VRQP1-24
Same as above except Southern Hemisphere without power cord	3R-VRQP1-23
Video Extension Cable	
1.8-m video extension cable	BN39C-02
Monitor Power Cords	
Australia/New Zealand	BN19H-2E
Central Europe	BN19C-2E
Denmark	BN19K-2E
India/South Africa	BN19S-2E
Israel	BN18L-2E
Italy	BN35M-02
Japan	3X-BN46F-02
North America, Japan	BN26J-1K
Switzerland	BN19E-2E
UK/Ireland/Hong Kong	BN19A-2E

Step 14 – Keyboards – Selection of country-specific keyboard is mandatory

	Tru64 UNIX	OpenVMS
U.S./English keyboard	SN-LKQ47-AA	LK461-A2
Arabic keyboard	SN-LKQ47-BR	-
Belgian keyboard	SN-LKQ47-AB	LK461-AB
BHCSY keyboard	SN-LKQ47-AX	-
Canadian/English keyboard	-	LK461-AQ
Canadian/French keyboard	SN-LKQ47-AC	LK461-AC
Cyrillic keyboard	SN-LKQ47-BT	LK461-BT
Czech keyboard	SN-LKQ47-BV	LK461-BV
Danish keyboard	SN-LKQ47-AD	LK461-AD
Dutch keyboard	SN-LKQ47-AH	LK461-AH
Finnish keyboard	SN-LKQ47-AF	LK461-AF
French keyboard	SN-LKQ47-AP	LK461-AP
German keyboard	SN-LKQ47-AG	LK461-AG

Options

Step 14 – Keyboards – Selection of country-specific keyboard is mandatory *(continued)*

	Tru64 UNIX	OpenVMS
Greek keyboard	SN-LKQ47-BH	LK461-BH
Hebrew keyboard	SN-LKQ47-AT	LK461-AT
Hungarian keyboard	SN-LKQ47-BQ	LK461-BQ
International keyboard	SN-LKQ47-BA	-
Italian keyboard	SN-LKQ47-AI	LK461-AI
Korean keyboard	SN-LKQ47-BK	-
Latin-American keyboard	SN-LKQ47-AR	-
Norwegian keyboard	SN-LKQ47-AN	LK461-AN
Polish keyboard	SN-LKQ47-BP	LK461-BP
Portuguese keyboard	SN-LKQ47-AV	LK461-AV
Romanian keyboard	-	LK461-BL
S. Chinese keyboard	SN-LKQ47-CV	-
Slovak keyboard	SN-LKQ47-CZ	LK461-CZ
Spanish keyboard	SN-LKQ47-AS	LK461-AS
Swedish keyboard	SN-LKQ47-AM	LK461-AM
Swiss/French keyboard	SN-LKQ47-AK	LK461-AK
Swiss/German keyboard	-	LK461-AL
Taiwanese keyboard	SN-LKQ47-BI	-
Thai keyboard	SN-LKQ47-CB	-
Turkish keyboard	SN-LKQ47-BU	LK461-BU
Turkish/French keyboard	-	LK461-BW
UK keyboard	SN-LKQ47-AE	-
Yugoslavian keyboard	-	LK461-BY

Step 15 – Tru64 UNIX and OpenVMS Partitions – Optional

- A single GS60E can be divided into a maximum of two partitions. Each partition is allocated its own set of hardware resources– CPU, memory, and I/O module. Partitioning support requiresTru64 UNIX V4.0F or later, or OpenVMS V7.2 or later operating system and partitioning licenses.
- System Console Firmware Revision 5.5x required
- Each partition requires a minimum of one CPU module, one memory module, one I/O module, and one DWLPB (PCI shelf) per partition
- Each partition has its own instance of the operating system, independent system console, and error log
- Each partition must have a dedicated console terminal. The first partition will obtain this support in a standard manner via the server console panel. The second partition requires a KFE72-DA to obtain this console support. H8571-J adapter is required to connect KFE72-DA to the console terminal. The KFE72-DA does not include a floppy diskette drive. Order 3X-KFE72-LA if a floppy or graphics support is required.
- For more information regarding Tru64 UNIX V4.0F partitioning configuration hardware guidelines and console partition commands, see Tru64 UNIX V4.0F SPD 41.61.22 and Tru64 UNIX V4.0F System Administration Guide, Appendix E.4.
- For more information regarding OpenVMS Galaxy partitioning guidelines and support, see http://www.openvms.digital.com/availability/GALAXY.HTML

Options

Step 15 – Tru64 UNIX and OpenVMS Partitions – Optional *(continued)*

Minimum Hardware Required per GS60E Partition

- Dual Alpha 21264A 6/700-MHz CPU module
- MS7CC-EA/FA/GA memory module (1 GB, 2 GB, 4 GB)
- KFTHA-AA I/O module
- DWLPB-DA shelf mount box
- KFE72-DA serial port console or 3X-KFE72-LA
- 3X-RRDRX-AA CD-ROM drive or network adapter; additional SCSI CD-ROM's can be configured in StorageWorks shelf using supported I/O adapters
- Console terminal with shielded console cable
- Tru64 UNIX Hardware Partition license per partition for second partition support (QM-MT4AA-AA)
- OpenVMS software partition license is required for each CPU in a partition (QL-66XAA-3B/3C/3D/3F)

Unsupported Options for GS60E Partitions

- MEMORY CHANNEL; clustering of a partitioned GS60E is not supported
- NVRAM (Prestoserve Non-Volatile Random Access Memory)
- EISA devices
- Supported Options List (SOL) restriction rules still apply for maximum configurations of GS60E systems.

Step 16– Expansion: System Cabinet and I/O Expansion Cabinet – Optional

System Cabinet

- System Cabinet includes PCI I/O shelf and StorageWorks shelf, and three 1600W 48 VDC power regulators for redundant hot-swappable power support
- Provides space for four BA36R-RC/RD UltraSCSI StorageWorks Shelves, one DWLPB-DA (PCI shelf mount boxes), or two BA36R-RC/RD StorageWorks shelves and two PCI shelves

I/O Expansion Cabinet

- Includes two 1600W 48 VDC power regulators providing N+1 hot swappable power redundancy; third space available for additional power supply for added power protection
- Maximum of two I/O Expansion Cabinets per system
- PCI I/O shelf included in I/O Expansion Cabinet
- Maximum of four PCI I/O shelves and three StorageWorks shelves or four StorageWorks shelves and three PCI I/O shelves supported in each I/O Expansion Cabinet
- StorageWorks shelves mount from top of cabinet downward, front mount only
- PCI I/O shelves mount from bottom of cabinet upward, rear mount only

I/O Expansion Cabinet (top gun blue) 3-phase power RETMA mounting, maximum of two per system; 120/208V US/Canada, 202V Japan 50-60 Hz	3X-H9A22-BA
Same as above except 380-415V Europe 50-60 Hz	3X-H9A22-BB

Cabinet Power Options

- System Cabinet with three power supplies and I/O Expansion Cabinet with two power supplies include necessary power and power redundancy required for all internal system components.

1600W power converter, 48V output, maximum of three per cabinet; option can be used to replace an existing power regulator in the System Cabinet and I/O Expansion Cabinet or provide additional power redundancy in the I/O Expansion Cabinet	H7506-AA

Options

Step 17 – Software – Required selection of media and documentation for first system on site

- Software Processor Code = G

Tru64 UNIX

- Tru64 UNIX systems include Unlimited User license, Server Extension license, Open Source Internet Solutions, and iPlanet Web Server – Enterprise Edition 4.0

When using Tru64 UNIX V5.0A or later

Tru64 UNIX V4 media and online documentation on CD-ROM	QA-6ADAA-H8
Tru64 UNIX full hard copy documentation	QA-6ADAA-GZ
StorageWorks Software Package with licenses for Logical Storage Manager and AdvFS Utilities	QB-5RXAG-AA
TruCluster Server License	QL-6BRAG-AA
Advanced Server for Tru64 UNIX, 25 client concurrent use license	QL-5U29M-3D
Advanced Server for Tru64 UNIX, 50 client concurrent use license	QL -5U29M-3E
Advanced Server for Tru64 UNIX, 100 client concurrent use license	QL -5U29M-3F
Advanced Server for Tru64 UNIX, 250 client concurrent use license	QL -5U29M-3G
Advanced Server for Tru64 UNIX, 500 client concurrent use license	QL -5U29M-3H
Layered products media and documentation for Tru64 UNIX on CD-ROM	QA-054AA-H8
DECnet/OSI end-system license for Tru64 UNIX	QL-MTJAG-AA
DECnet/OSI extended function license for Tru64 UNIX	QL-MTKAG-AA

When using Tru64 UNIX V4.0G or earlier

Tru64 UNIX V4 media and online documentation on CD-ROM	QA-MT4AA-H8
Tru64 UNIX V4 full hard copy documentation	QA-MT4AA-GZ
StorageWorks Software Package with licenses for Logical Storage Manager and AdvFS Utilities	QB-5RXAG-AA
TruCluster Available Server license V4 and documentation	QB-05SAG-AA
TruCluster Available Server V4 license	QL-05SAG-AA
TruCluster Production Server License	QB-3RLAG-AA
Tru64 UNIX Driver for MEMORY CHANNEL license	QB-4ZCAG-AA
Advanced Server for Tru64 UNIX, 25 Client Concurrent License	QL-5U29M-3D
Advanced Server for Tru64 UNIX, 50 Client Concurrent License	QL-5U29M-3E
Advanced Server for Tru64 UNIX, 100 Client Concurrent License	QL-5U29M-3F
Advanced Server for Tru64 UNIX, 250 Client Concurrent License	QL-5U29M-3G
Advanced Server for Tru64 UNIX, 500 Client Concurrent License	QL-5U29M-3H
Layered products media and documentation for Tru64 UNIX on CD-ROM	QA-054AA-H8
DECnet/OSI end-system license	QL-MTJAG-AA
DECnet/OSI extended function license	QL-MTKAG-AA

OpenVMS

- OpenVMS systems include OpenVMS base license with system manager license and Compaq Enterprise Integration Server License Package for OpenVMS Revision V3.0A
- Compaq Enterprise Integration Package includes licenses for TCP/IP Services for OpenVMS, DECwindows Motif for OpenVMS Alpha, DECprint Supervisor for OpenVMS Alpha Plus, DECprint Supervisor for OpenVMS Open, DECnet-Plus for OpenVMS Alpha End System, Archive/Backup System for OpenVMS Management Tools, Archive/Backup Agent for Windows NT, OpenVMS Disk Services for Windows NT, Office Server for OpenVMS, PATHWORKS 32, PATHWORKS V6 for OpenVMS – Advanced Server, and DIGITAL Office Server Client Access License
- OpenVMS Concurrent Use licenses provide the right to interactively use the operating system by the specified number of concurrent users on a designated OpenVMS system. OpenVMS Concurrent Use licenses can be moved from one system to another at user discretion and can be shared in a mixed OpenVMS VAX and OpenVMS Alpha cluster.
- OpenVMS Traditional Unlimited Use license is system specific and can only be used on one single system at a time. It cannot be shared between systems or in an OpenVMS VAX or OpenVMS Alpha Cluster.

Options

Step 17 – Software – Required selection of media and documentation for first system on site *(continued)*

OpenVMS *(continued)*

Concurrent Use 1-user license	QL-MT3AA-3B
Concurrent Use 2-user license	QL-MT3AA-3C
Concurrent Use 4-user license	QL-MT3AA-3D
Concurrent Use 8-user license	QL-MT3AA-3E
Concurrent Use 16-user license	QL-MT3AA-3F
Concurrent Use 32-user license	QL-MT3AA-3G
Concurrent Use 64-user license	QL-MT3AA-3H
Concurrent Use 128-user license	QL-MT3AA-3J
Concurrent Use 256-user license	QL-MT3AA-3K
Traditional unlimited user license	QL-MT2AG-AA
OpenVMS V7.1-2 media and online documentation on CD-ROM	QA-MT1AR-H8
OpenVMS V7.2-1 media and online documentation on CD-ROM	QA-MT1AT-H8
OpenVMS media and documentation on CD-ROM	QA-MT1AA-H8
OpenVMS base hard copy documentation	QA-09SAA-GZ
Layered products media and documentation for OpenVMS on CD-ROM; includes Compaq Enterprise Integration Server for OpenVMS media and documentation	QA-03XAA-H8
DECnet/OSI end-system license	QL-MTFAG-AA
DECnet/OSI extended function license	QL-MTHAG-AA
Cluster License for OpenVMS Alpha	QL-MUZAG-AA

Step 18 – Hardware Installation Services/Hardware and Software Supplemental Support Services – Installation Services required

- Installation or Installation and Startup is required for all AlphaServer GS60E systems. Consult a Compaq Customer Service Account Representative for assistance in selecting the support plan that is most appropriate. For more information on Compaq Services, see http://www.compaq.com/services Please note that this Web site is available in English only.

Installation Services

Installation Service Package	FM-ALP82-IN

Hardware Supplemental Support—Americas and Asia Pacific only

- Systems include one-year hardware warranty, on-site, same day, 4-hour response time; select optional Hardware Supplemental Support Services, if required.

	2 CPUs – 1-GB Memory	2 CPUs – 4-GB Memory
Years 1-3, 5 x 9, 4-hour response time	FM-8D4HR-36	FM-8V4HR-36
Years 1-3, 5 x 12, 4-hour response time	FM-8D512-36	FM-8V512-36
Years 1-3, 6 x 16, 4-hour response time	FM-8D616-36	FM-8V616-36
Years 1-3, 7 x 24, 4-hour response time	FM-8D724-36	FM-8V724-36
Years 1-5, 5 x 9, 4-hour response time	FM-8D4HR-60	FM-8V4HR-60
Years 1-5, 5 x 12, 4-hour response time	FM-8D512-60	FM-8V512-60
Years 1-5, 6 x 16, 4-hour response time	FM-8D616-60	FM-8V616-60
Years 1-5, 7 x 24, 4-hour response time	FM-8D724-60	FM-8V724-60

Options

Step 18 – Hardware Installation Services/Hardware and Software Supplemental Support Services – Installation Services required *(continued)*

Software— Americas and Asia Pacific only

- Systems include 90-day Conformance to SPD and Telephone Advisory Support. Select optional Software Supplemental Support Services, if required.
- Software service upgrades for Tru64 UNIX include advisory and remedial software support with new version license rights for Tru64 UNIX Base, unlimited users, and Server Extensions.
- Software service upgrades for OpenVMS include advisory and remedial software support with new version license rights for OpenVMS Base and Enterprise Integration Package.

Software Supplemental Support— 2 CPU Systems

	Tru64 UNIX	OpenVMS
12-month 5 x 9 Bronze Software Supplemental Support	FM-60EU9-12	FM-60EV9-12
36-month 5 x 9 Bronze Software Supplemental Support	FM-60EU9-36	FM-60EV9-36
60-month 5 x 9 Bronze Software Supplemental Support	FM-60EU9-60	FM-60EV9-60
12-month 7 x 24 Bronze Software Supplemental Support	FM-60EUS-12	FM-60EVS-12
36-month 7 x 24 Bronze Software Supplemental Support	FM-60EUS-36	FM-60EVS-36
60-month 7 x 24 Bronze Software Supplemental Support	FM-60EUS-60	FM-60EVS-60
12-month Bronze Node Software Supplemental Support	FM-60EUN-12	FM-60EVN-12
36-month Bronze Node Software Supplemental Support	FM-60EUN-36	FM-60EVN-36
60-month Bronze Node Software Supplemental Support	FM-60EUN-60	FM-60EVN-60

Software Supplemental Support— SMPs for Tru64 UNIX and OpenVMS

1-year, 82/GS60-84/GS140-GS60E Dual-CPU SMP	FM-824DP-12
3-year, 82/GS60-84/GS140-GS60E Dual-CPU SMP	FM-824DP-36
5-year, 82/GS60-84/GS140-GS60E Dual-CPU SMP	FM-824DP-60

Hardware and Software Supplemental Support Services— Europe only

- Europe does not offer specific part numbers for Hardware and Software Supplemental Support Services; prices are quoted based on worldwide service reference pricing. Contact MCS Sales in your country for information on Hardware and Software Supplemental Support Services.

Step 19 – Recommended Online Power Protection/UPS Solutions for AlphaServer GS60E

- For complete protection, UPS products should be used with data line surge protectors

4-wire RJ45 10BaseT, wall plug-in module, add up to four modules per plug in connection	4N-GA249-CA
17" din rail with 19" rackmount provisions for mounting up to 32 ports, rack or wall mount	4N-GA245-AA
Din rail mount surge protection module, 8-wire RJ45, 10/100BaseT twisted pair UL category 5	4N-GA245-EA

Powerware Plus 3-Phase UPS Models

- All models are hardwired on input and rated 50/60 Hz; North American models are rated 176V-256V in, 100/200V, 120/208V, 127/220V out; international models are rated 380-415V in, 380/220V, 400/230V, 415/240V out

Options

Step 19 – Recommended Online Power Protection/UPS Solutions for AlphaServer GS60E *(continued)*

UPS Models 15 and 18 kVA

- North America 15 and 18kVA Models are hardwired on output with optional plug-in receptacle panel

15kVA/10kW, 10 minutes battery time at full load, two batteries, North America or other 60-Hz applications	4N-AEAAN-BA
18kVA/12kW, seven minutes battery time at full load, two batteries, North America or other 60-Hz applications	4N-AEAAP-BA
15kVA/10kW, 16 minutes battery time at full load, two batteries, North America or other 60-Hz applications	4N-AEAAN-BC
18kVA/12kW, 12 minutes battery time at full load, two batteries, North America or other 60-Hz applications	4N-AEAAP-BC
15 kVA/10kW, 29 minutes of battery time at full load, three batteries, North America or other 60-Hz applications	4N-AEAAN-BD
18kVA/12kW, 22 minutes of battery time at full load, three batteries, North America or other 60-Hz applications	4N-AEAAP-BD
15 kVA/10kW, 10 minutes of battery time at full load, two batteries, international or other 50-Hz applications, hardwired only	4N-AEAAN-BE
18kVA/12kW, seven minutes of battery time at full load, two batteries, international or other 50-Hz applications, hardwired only	4N-AEAAP-BE

UPS Models 24 and 36kVA

- Models are hardwired on output with optional 30 pole distribution cabinet, wraparound maintenance by-pass and input filter; distribution cabinet accepts Square D circuit breakers

36kVA/24kW, five minutes of battery time at full load, one battery, North America or other 60-Hz applications	4N-AEAAS-AA
24kVA/16kW, 30 minutes of battery time at full load, two batteries, North America or other 60-Hz applications	4N-AEAAR-AB
36kVA/24kW, 15 minutes of battery time at full load, two batteries, North America or other 60-Hz applications	4N-AEAAS-AB
24kVA/16kW, 50 minutes of battery time at full load, three batteries, North America or other 60-Hz applications	4N-AEAAR-AC
36kVA/24kW, 30 minutes of battery time at full load, three batteries, North America or other 60-Hz applications	4N-AEAAS-AC

15 and 18kVA UPS Receptacle Options, Extended Battery Options (Common configurations shown; other receptacle options available)

- Choose UPS receptacle option depending on input plug configuration of external storage cabinet used; ESA 10000 requires two L6-30R, SW800 requires two L21-30R, and GS60E Expansion Cabinet requires one L21-30R

15/18kVA model output receptacle module, two L21-30R, three 5-20R2	4N-AEACM-BK
15/18kVA model output receptacle module, two L6-30R, two L21-30R, one 5-20R2	4N-AEACM-BN
15/18kVA model output receptacle module; Module 1 – two L21-30R and conduit kit for connecting Module 1 to Module 2; Module 2 – two L21-30R, three 5-20R2	4N-AEACM-PA
Add-on battery cabinet for 15 and 18kVA models; can be added to Model 4N-AEAAN/P-BD – approximately 12 minutes per cabinet	4N-AEACH-BB

24 and 36kVA UPS Auxiliary Cabinet Options

- All cabinets contain wraparound external maintenance bypass switch

Auxiliary Cabinet with wraparound bypass only	4N-AEACP-AA
Auxiliary Cabinet with 30 pole distribution	4N-AEACP-AB
Auxiliary Cabinet with input harmonic distortion filter	4N-AEACP-BA
Auxiliary Cabinet with 30 pole distribution and input harmonic distortion filter	4N-AEACP-BB

Options

Step 19 – Recommended Online Power Protection/UPS Solutions for AlphaServer GS60E *(continued)*

Cabinets with 480V Input Transformer

Auxiliary Cabinet with 480V input transformer only	4N-AEACP-AC
Auxiliary Cabinet with 480V input transformer and 30 pole distribution	4N-AEACP-AD
Auxiliary Cabinet with 480V input and 480V output transformer only	4N-AEACP-AE
Auxiliary Cabinet with 480V input transformer and input harmonic distortion filter	4N-AEACP-BC
Auxiliary Cabinet with 480V input transformer and 30 pole distribution and input harmonic distortion filter	4N-AEACP-BD
Auxiliary Cabinet with 480V input and 480V output transformer and input harmonic distortion filter	4N-AEACP-BE

Note: Power cables with plug in circuit breakers and special receptacles also available for use with above distribution cabinets.

UPS Monitoring and Unattended Shutdown Software

- Power Management software communicates with recommended UPS; network adapter is required for Tru64 UNIX; local port or terminal server is required for OpenVMS; multi-interface module is required for multiple servers running OpenVMS

Connect-UPS network adapter, Twisted Pair, 60 Hz 120V NEMA	4N-AEAEO-DA
Connect-UPS network adapter ThinWire, 60 Hz 120V NEMA – Tru64 UNIX only	4N-AEAEO-DC
Connect-UPS network adapter, Twisted Pair, 50 Hz 240V IEC – Tru64 UNIX only	4N-AEAEO-DB
Connect-UPS network adapter, ThinWire, 50 Hz 240V IEC – Tru64 UNIX only	4N-AEAEO-DD
Multi-interface module, two to four OpenVMS systems on one UPS, includes splitter cable to interface with network adapter (Tru64 UNIX) and terminal server output (OpenVMS) for mixed operating platforms on one UPS; kits can be daisy-chained	4N-JMIU4-AB
Tru64 UNIX software kit	4N-AEAES-GD
OpenVMS software kit	4N-ONVMS-PL

Upgrades

AlphaServer GS60E System Upgrades

- The following AlphaServer 8200 or GS60 upgrades are complete box-swap system upgrades to the AlphaServer GS60E. With this type of upgrade, the system cabinet is replaced; however, the existing AlphaServer GS60 CPU and CPU clock module, AlphaServer 8200/GS60 memory, and PCI I/O modules remain usable and are transferable.
- The AlphaServer 8200 to AlphaServer GS60E upgrade includes one dual Alpha 21264A 700-MHz CPU module. For additional AlphaServer GS60E system expansion options, see the "Options" section in this QuickSpec.
  - Upgrades include the AlphaServer GS60E system cabinet with the following:
  - 7-slot system bus
  - Three 1600W 48V DC power regulators for redundant hot-swappable power support; 3-phase power subsystem
  - One 12-slot PCI shelf
  - One UltraSCSI 16-bit StorageWorks shelf with power supply and 1-m SCSI cable
  - Upgrade documentation
  - Base operating system license

AlphaServer GS60E 6/700 System Upgrades

Dual AlphaServer 8200 or GS60 to AlphaServer GS60E 6/700 System Upgrade, Tru64 UNIX	DA-76U8C-AA/AB
Dual AlphaServer 8200 or GS60 to AlphaServer GS60E 6/700 System Upgrade, OpenVMS	DY-76U8C-AA/AB

Compaq Capacity on Demand (CCoD) Program

AlphaServer GS60E customers who upgrade their systems to the EV6/700 processor can now add additional CPU capacity without waiting to purchase the resource until it's required and without rebooting their system. The Compaq Capacity on Demand Program, outlined below, is a two-part process.

Part 1

- Customer purchases a Tru64 UNIX or OpenVMS CCoD SMP 6/700 Upgrade Kit (3X-764C2-AX or 3X-764C1-AX)
- When purchasing the CCoD Kit, customer signs a CCoD program agreement to purchase the 6/700 dual-CPU SMP module (3X-764P1-AX or #X-764P2-AX) within 12 months or upon "first use" (CPU activation) of the module
- Blank copy of the agreement is available at http://www.compaq.com/alphaserver/cod Please note that this Web site is available in English only.

Part 2

- Customer will be invoiced for the 6/700 dual-CPU SMP module
- Invoice will be generated upon notification by the customer of "first use" or expiration of the 12-month period
- Full program terms and conditions are outlined in the CCoD agreement located at http://www.compaq.com/alphaserver/cod Please note that this Web site is available in English only.

Notes:

- CCoD Upgrade kits are field installed only
- Minimum OS requirement: Tru64 UNIX V4.0F, OpenVMS V7.1-2 or V7.2-1
- Minimum console requirement: V5.5-25

CCoD Hardware/Software SMP 6/700Upgrade Kit with dual-EV6/700 processor, SMP licenses, and CCoD software CD – Tru64 UNIX, field installed only	3X-764C2-AX
CCoD Hardware/Software SMP 6/700Upgrade Kit with dual-EV6/700 processor, SMP licenses, and CCoD software CD – OpenVMS, field installed only	3X-764C1-AX

Technical Specifications

System Unit

Physical Characteristics

Dimensions (HxWxD)	67 x 23.6 x 39.4 in/170 x 60 x 100 cm
Shipping Dimensions	76.25 x 36 x 47.9 in/194 x 91.5 x 121.5 cm
Weight	
Minimum configuration	650 lbs
Maximum configuration	775 lbs
Shipping Weight	
Minimum configuration	750 lbs
Maximum configuration	875 lbs

Clearances	**Operating**	**Service**
Front	40 in/1 m	59 in/1.5 m
Rear	40 in/1 m	40 in/1 m
Sides	0	0

Environmental	**Operating**	**Non-Operating**
Temperature	59°F to 82°F/15°C to 28°C	–40°F to 151°F/–40°C to 66°C
Humidity	20% to 80%	10% to 95%
Altitude	0 to 8,000 ft/0 to 2.4 km	30,000 ft/9,100 m
Vibration	2 to 22 Hz @ 0.01”da maximum	22 to 500 Hz @ 0.25g maximum
Heat dissipation	Minimally configured system[1] (system cabinet) 1200W/4100 Btu/hr Fully configured system[2] (system cabinet) 2450W / 8300 Btu/hr Fully configured system[3] (system cabinet with two I/O expansion cabinets) 5,150W/17,550 Btu/hr	

Regulatory

Agency approvals	UL Listed to UL1950 cUL Listed to CAN/C22.2 No. 950-M89 FCC Part 15 (Class A) CE Declaration 4206
Reviewed to	EN 60950 1922/A4:1997, European Norm AS/NZS 3260:1993, Australian/New Zealand Standard 73/23/EEC, Low Voltage Directive IEC950, second edition, fourth Amendment

Power Requirements[4]	**US/Canada**	**Japan**	**Europe/AP**
Nominal voltage	120/208V	202V	380-415V
Frequency range	50 Hz to 60 Hz	50 Hz to 60 Hz	50 Hz to 60 Hz
Phases	3-phase star 3-wire+N+GND	3-phase delta 4-wire mid-GND or 3-wire junction GND	3-phase star 3-wire+N+GND
Maximum input current/phase	17A rms	17A rms	9A rms
Surge current	210A peak	210A peak	215A peak
Rating	30A	30A	32A
Power cord length	15 ft/4.5 m	15 ft/4.5 m	15 ft/4.5 m
Power cap (system)	DEC 12-12314-00	DEC 12-12314-01	DEC 12-14379-06
Receptacle (site)	DEC 12-12315-00	DEC 12-12315-01	Hubbell 532R6W
(industry equivalent)	NEMA L21-30R	NEMA L21-30R	IEC 309 (32A)
PCS/PDS/PDU/UPS cable	BC24W	BC24W	BN29X

Technical Specifications

[1] Minimally configured system contains three power supplies, dual-CPU module, memory module, system I/O module, CD-ROM, minimally configured PCI shelf, and one disk drive.
[2] Fully configured system contains three power supplies, three dual-CPU modules (six CPUs), two memory modules, two system I/O modules, two PCI shelves, CD-ROM, and two StorageWorks shelves with 12 disk drives.
[3] Fully configured system and two expansion cabinets consist of the above “fully configured system” and two expansion cabinets, each include three PCI shelves, four StorageWorks shelves, and 24 disk drives.
[4] Power system provides near unity power factor, which allows full utilization of the input line current (Watts = VA).