Compaq AlphaServer GS140 and AlphaServer 8400
Tru64 UNIX and OpenVMS Systems
V3.2—19 April 1999

Systems and Options Catalog

Product Description

Compaq AlphaServer GS140 systems offer 6/525 MHz 64-bit Alpha 21264 microprocessors with a large I/O capacity to tackle the most demanding business applications. The AlphaServer Global Solutions (GS) series features mainframe-like performance and capabilities, and high availability computing through clustering with exceptional scalability in every aspect of the system. Systems are packaged in top gun blue system cabinets and feature up to 14 independently powerful CPUs with their own data and address paths, 28 Gbytes of error correctable memory and up to 144 PCI slots on 12 different physical PCI buses, and system and I/O bandwidth normally associated with mainframe systems.

AlphaServer 8400 systems offer up to 14 Alpha 21164 5/625 MHz CPUs that can be configured with up to 28 GB of memory and up to 144 PCI slots on 12 different physical PCI buses. These servers offer room for growth for the largest and most complex applications. Large databases, complex simulations, data warehousing, and decision support are examples of the kinds of applications the AlphaServer GS140 and AlphaServer 8400 support with ease.

ServerWORKS Manager provides advanced server and network management capabilities and is supplied with all AlphaServer systems. Simple Network Management Protocol (SNMP) enables information to pass from the managed system to the console for Tru64 UNIX, Windows NT, and OpenVMS AlphaServers. Detailed server information is viewable, including system, network, storage, and environmental information. All AlphaServer systems are also supplied with management tools to complement ServerWORKS Manager. For more information, see the StorageWorks Software section of this catalog.

AlphaServer GS140 and AlphaServer 8400 run Tru64 UNIX or OpenVMS operating systems. Clusters, hot swap disks, RAID, redundant power, ECC memory and data paths, fault management, and Uninterruptable Power Supply (UPS) are all available. For investment protection DEC 7000 and VAX 7000 products can be upgraded to the AlphaServerGS140 or AlphaServer 8400 configurations.

Compaq and the names of Compaq products referenced herein are either trademarks and/or service marks or registered trademarks and/or service marks of Compaq.

DIGITAL is a Trademark of Compaq Computer Corporation.

Microsoft, Windows, Windows NT, SQL Server, Office and BackOffice are either trademarks or registered trademarks of Microsoft Corporation.

Intel and Pentium are registered trademarks of Intel Corporation.

Other product and company names mentioned herein may be trademarks and/or service marks of their respective owners.

Step 1—AlphaServer GS140 and AlphaServer 8400 Systems

- Compaq AlphaServer GS140 6/525 Systems require minimum operating system support of:
  - Tru64 UNIX V4.0E
  - OpenVMS V7.1-2
- AlphaServer 8400 5/625 Systems require minimum operating system support of:
  - Tru64 UNIX V3.2G, V4.0B, or V4.0D or later
  - OpenVMS V6.2-1H3 or V7.1-1H1 or later
- Software media and documentation required for first system on site. See Step 12 for ordering information.
- Console terminal required to install system. (Unless terminal is available on site).
- For recommended power protection see section after system specifications. Power Management software is included with all AlphaServers. Software communicates with recommended UPS.
- Refer to *Installation Notes* for Compaq AlphaServer GS140, AV-RFCCA-TE, for full installation details and current configuration restrictions.
- Refer to *Installation Notes* for Compaq AlphaServer GS140, AV-RFCCA-TE, for full installation details and current configuration restrictions.

AlphaServer GS140 and AlphaServer 8400 Expanded Base Servers include:

- AlphaServer GS140 includes: Processor module with two Alpha microprocessor 21264 6/525 MHz CPUs; each CPU includes 4 MB Backup cache.
- AlphaServer 8400 includes: Processor module with two Alpha microprocessor 21164 5/625 MHz[1] CPUs, each CPU includes 4 MB Backup cache.
- System I/O module with 4 I/O channels (KFTHA-AA).
- AlphaServer GS140 includes 4GB of memory.
- AlphaServer 8400 includes 2GB or 4GB of memory.
- BA670-AA UltraSCSI StorageWorks Plug-in Unit.
- 4.3 GB 3.5” UltraSCSI system disk drive.
- BN38C-02 2-meter SCSI cable.
- 600 MB CD-ROM drive.
- One 12 slot PCI Plug-in Unit (DWLPB-AA).
- One PCI-based one port UltraSCSI Single-ended adapter (KZPBA-CA).
- PCI-based one port Fast Narrow Single-ended SCSI adapter (KZPAA-AA) for CD-ROM connection only.
- Etherworks or later32-bit Network Interface Card.
- BN21H-02 2-meter SCSI cable.
- Two H7263-AC or H7263-AD non-BBU capable 48 VDC power regulators.
  - Three-Phase power subsystem includes power cord
- Shielded console cable for connection to terminal.
- Factory Installed Software.
- Operating System Software
  - Tru64 UNIX base license, Unlimited User license, Server Extension license, Internet Access Software license, or
  - OpenVMS base license, DIGITAL Enterprise Integration Package V2.0
- One year hardware product warranty.
- 90 day software product warranty.
- System installation must be ordered separately with AlphaServer GS140 6/525 and AlphaServer 8400 5/625 systems.

1. 5/625 CPUs clocked at 612.8 MHz for AlphaServer 8400 applications.

Compaq AlphaServer GS140 6/525 Dual CPU Expanded Base Servers (Top Gun Blue Enclosures)

Order Number	Operating System	CPU	Memory	Power
DA-393GG-AA/AB/AC	Tru64 UNIX	Two 6/525 MHz	4 GB	Three Phase
DY-393GG- AA/AB/AC	OpenVMS	Two 6/525 MHz	4 GB	Three Phase

5/625 Dual CPU Expanded Base Servers (Top Gun Blue Enclosures)

Order Number	Operating System	CPU	Memory	Power
DA-392GG-AA	Tru64 UNIX	Two 5/625 MHz	4 GB	Three Phase
DA-392GG-AB	Tru64 UNIX	Two 5/625 MHz	4 GB	Three Phase
DA-392GG-AC	Tru64 UNIX	Two 5/625 MHz	4 GB	Three Phase
DY-392GG-AA	OpenVMS	Two 5/625 MHz	4 GB	Three Phase
DY-392GG-AB	OpenVMS	Two 5/625 MHz	4 GB	Three Phase
DY-392GG-AC	OpenVMS	Two 5/625 MHz	4 GB	Three Phase

Step 1—AlphaServer GS140 and AlphaServer 8400 Systems

5/625 Dual CPU Expanded Base Servers (Gray Enclosures)

Order Number	Operating System	CPU	Memory	Power
DA-292GF-CA/CB/CC	Tru64 UNIX	Two 5/625 MHz	2 GB	Three Phase
DA-292GG-CA/CB/CC	Tru64 UNIX	Two 5/625 MHz	4 GB	Three Phase
DY-292GF-CA/CB/CC	OpenVMS	Two 5/625 MHz	2 GB	Three Phase
DY-292GG-CA/CB/CC	OpenVMS	Two 5/625 MHz	4 GB	Three Phase

Note: xA = 60 Hz, 208 V, xB = 50 Hz, 380/416 V, xC = 50/60 Hz, 202 V Japan
All three phase power variations include attached power cord.

Step 2—Additional CPU Modules (SMP Expansion Options)

- AlphaServer GS140 and AlphaServer 8400 systems support a maximum of 7 processor modules (total of 14 CPUs) under Tru64 UNIX or OpenVMS.
- Combining 5/625 MHz and 6/525 MHz CPU modules in same system is not supported.
- For more than three processor modules in a system, a minimum of two separate memory modules are recommended for optimal system performance.
- All SMP upgrades include processor module with Alpha microprocessors SMP license, and end-user product warranty.

AlphaServer GS140 6/525	AlphaServer 8400 5/625	CPU Module Type	Operating System
762P2-AX	**758P2-AX**	Dual-CPU	Tru64 UNIX
762P1-AX	**758P1-AX**	Dual-CPU	OpenVMS

Step 3—Memory

- Maximum of 28 GB of memory supported on AlphaServer GS140 and AlphaServer 8400 systems.
- Systems support up to six additional memory modules—system maximum seven.
- Maximum seven memory modules is reduced by one for each additional CPU module added from Step 2 in this section and each additional System I/O module added from Step 5 in this section.
- Memory modules
  - 1 and 2 GB memory modules have built in two-way interleaving; additional interleaving is accomplished by adding more memory modules.
  - 4 GB memory modules have built in four-way interleaving. The best performance is achieved when two 2 GB modules are paired with one 4 GB module or one 4 GB memory is paired with another 4 GB memory module. These sets (2 x 2 GB and 1 x 4 GB) or (2 x 4 GB) can be paired with another 8 GB memory set for a maximum of 16-way memory interleaving.

MS7CC-EA	1 GB memory module
MS7CC-FA	2 GB memory module
MS7CC-GA	4 GB memory module

Step 4—I/O Expansion Buses

PCI I/O expansion buses are available on AlphaServer GS140 and AlphaServer 8400 systems. Application and system configuration determines maximum I/O configuration. Configuration limits exist at I/O bus level and controller level. With different I/O buses present in the system, verify maximum number of allowed controllers listed in the Controller Configuration Table.

PCI Plug-in Unit

- Systems include one 12-slot PCI Plug-in Unit (PIU) DWLPB-AA, up to a maximum of two supported in systems cabinet.
- Each DWLPB-AA PCI PIU includes a 12-slot PCI bus and uses one rear expansion bay. StorageWorks BA670 PIU can occupy the corresponding front expansion bay.
- Each DWLPB-AA PCI PIU has one open space for addition of DWLPB-BA (second PCI expansion box) or one BA671 Wide UltraSCSI StorageWorks shelf.
- Each PCI Plug-in Unit requires one I/O channel connection to KFTHA-AA.
- AlphaServer GS140 systems currently support a maximum of one KFTHA system I/O module in Slot 8.
- AlphaServer 8400 systems support a maximum of twelve I/O channels with up to three KFTHAs.

DWLPB-AA	**PCI Plug-in Unit** with one PCI box for AlphaServer GS140 and AlphaServer 8400 system cabinet only, maximum two per system cabinet, two per system. Requires one I/O channel connection on KFTHA-AA.
DWLPB-BA	**Second PCI** expansion box for mounting in DWLPB-AA—maximum one per DWLPB-AA. Requires one I/O channel connection on KFTHA-AA.
KFE70-AA[1]	**EISA bridge option**—PCI to EISA bridge module set—must reside in first DWLPB-AA in system cabinet only. Converts PCI bus from 12-slot bus to 2 EISA, 6 PCI/EISA, and 2 PCI slots. Includes RX26 floppy drive, mounting hardware, and cables to mount RX26 below CD-ROM in the system cabinet. Maximum of one EISA bridge option per system. Required to support KZPAC SCSI RAID controllers. It includes floppy disk drive required to run RAID Configuration Utility (RCU).

1. KFE70-AA and KFE72-EA are not supported concurrently on the same system, however, either option can be used to run RAID Configuration Utility (RCU).

UltraSCSI StorageWorks Shelves

BA671-AA	**UltraSCSI Single Channel StorageWorks Shelf** (DS-BA356-LE) can be added to DWLPB-AA/AB in place of second PCI expansion box (DWLPB-BA/BB). Maximum one BA671-AA per DWLPB-AA/AB, and maximum of six BA671-AA per system. Supports 16-bit (Wide) SCSI and some 8-bit (Narrow) SCSI devices.
BA671-AB	**UltraSCSI Dual Channel StorageWorks Shelf** (DS-BA356-LF) can be added to DWLPB-AA/AB in place of second PCI expansion box (DWLPB-BA/BB). Maximum one BA671-AA per DWLPB-AA/AB, and maximum of six BA671-AB per system. Supports 16-bit (Wide) SCSI and some 8-bit (Narrow) SCSI devices.

Step 5—System I/O Modules

- KFTHA-AA system I/O module included with Expanded Base Servers.
- AlphaServer GS140 and AlphaServer 8400 systems support two additional KFTHA system I/O modules for a system total of three.
- Systems support a maximum of twelve I/O channels available with three KFTHA-AA modules installed.

KFTHA-AA	**System I/O module with four I/O channels** for PCI Plug-in Units

Step 6—Storage Adapters/Controllers

- Tru64 UNIX V4.0B without VGA support, or V4.0D or later with VGA, supports 8 SCSI controllers per PCI, maximum 64 per system.
- OpenVMS V6.2-1H3 or later supports 8 SCSI controllers per PCI, maximum 26 per system.
- For maximum controllers per PCI, the required System Console Firmware Revision is 5.2-7 or later for AlphaServer 8400, or 5.3-12 or later for GS140.
- PCI and XMI storage controllers can be added.
  - Requires corresponding PCI Plug-in Unit (DWLPB-AA/AB/BA/BB)
- System maximum of four KZPAC SCSI RAID controllers**.**
- Tape and optical devices are not supported on KZPAC SCSI RAID controllers**.**
- Order Rear Door Expansion Kit **H9FDK-AA** (gray) or **H9FDK-BA** (top gun blue) for cable management on systems configured with more than 12 SCSI controllers.
- For cluster configurations, use Y cable BN39A-0G.
- DS-BA35X-DA UltraSCSI personality module is required to connect DS-BA356-LE StorageWorks Shelf to a KZPSA-BB or KZPBA-CB Differential SCSI adapter.

PCI-based UltraSCSI Adapters/Controllers

KZPBA-CA	**PCI-based one port UltraSCSI Single-ended adapter—**Uses one PCI slot.
KZPBA-CB[1]	**PCI-based one port UltraSCSI Differential host adapter—**Uses one PCI slot.
BN38C-01[2]	1 meter VHDCI male to 68HD male UltraSCSI cable, connects KZPBA-Cx to BA670 in system cabinet (rear)
BN38C-02[2]	1 meter VHDCI male to 68HD male UltraSCSI cable, connects KZPBA-Cx to BA670 in system cabinet (front)
BN38C-03/05[2]	3/5 meter VHDCI male to 68-pin HD male UltraSCSI cable, connects KZPBA to H9B10-xx I/O expansion cabinet.
KZPAC-AA[3]	**PCI-based one port RAID (FWSE) Controller (UltraSCSI ready) with 4 MB cache memory—** Uses one PCI slot. Allows RAID levels 0, 1 and 5. Includes RAID Array 230/plus subsystem software and documentation kit. KFE70-AA EISA Bridge option required. Tape and optical drives not supported. OpenVMS V6.2-1H3 or V7.1 or later, and Tru64 UNIX V3.2G or V4.0B or later, supports 4 per PCI, maximum 4 per system.
KZPAC-CA[3]	**PCI-based three port RAID (FWSE) Controller (UltraSCSI ready) with 4 MB cache memory—** Uses two PCI slots.. Allows RAID levels 0, 1 and 5. Includes RAID/Array 230/plus subsystem software and documentation kit. KFE70-AA EISA Bridge option required. Tape and optical drives not supported. OpenVMS V6.2-1H3 or V7.1 or later and Tru64 UNIX V3.2G or V4.0B or later, supports 4 per PCI, maximum 4 per system if third port is not used (otherwise maximum of 3 per PCI, 3 per system). Order BN31K-0E or KZPAC-SB for third port connection.
KZPAC-CB[3]	**PCI-based three port RAID (FWSE) Controller (UltraSCSI ready) with 8 MB cache memory—** Uses two PCI slots.. Allows RAID levels 0, 1 and 5. Includes RAID/Array 230/plus subsystem software and documentation kit. KFE70-AA EISA Bridge option required. Tape and optical drives not supported. OpenVMS V6.2-1H3 or V7.1 or later and Tru64 UNIX V3.2G or V4.0B or later, supports 4 per PCI, maximum of 4 per system if third port not used (otherwise maximum of 3 per PCI, 3 per system). Order BN31K-0E or KZPAC-SB for third port connection.
KZPSC-UB	Battery back-up for cache memory option for KZPAC controller.
MS100-BB	8 MB cache memory option; upgrades KZPAC-CA to KZPAC-CB, field installable only.
KZPAC-SB	SCSI cable/bulkhead assembly kit with two ports for KZPAC-CA/CB, allows connection of two third port outputs using one PCI bulkhead slot.
BN31K-0E	SCSI cable/bulkhead assembly kit with one port for KZPAC-CA/CB, allows connection of one third port output using one PCI bulkhead slot..
BN37A-01/02[2]	1.0/2.0 meter UltraSCSI cable, VHDCI male to VHDCI male, required for each UltraSCSI shelf connected to KZPAC controller.

1. OpenVMS V7.1-1H1 or later supports multi-host SCSI clusters.
2. Manufacturing may substitute correct cable length depending on configuration.
3. OpenVMS systems with greater than 1 GB of memory require the following TIMA patch kits to support KZPAC options: V6.2 kit-ALPDRIV04_062; V7.1 kit-ALPDRIV01_071.

Step 6—Storage Adapters/Controllers *(continued)*

PCI-based Fast10 SCSI Adapter

KZPSA-BB	**PCI-based Fast Wide Differential SCSI Adapter**—Uses one PCI slot. KZPSA supports DECsafe Available Server and Tru64 UNIX TruClusters.
BN21K-xx	SCSI-2 Fast Wide Differential cables—68-pin male straight to 68-pin male right-angle. Connects KZPSA-BB Fast Wide Differential SCSI-2 port to DWZZA-VA or DWZZB-VW.
BN21K-01[1]	Connects from KZPSA to DWZZB-VW in BA670-AB System cabinet (rear) Connects from KZPSA to DWZZB-VW in BA671-AA in DWLPB-xx PIU
BN21K-02[1]	Connects from KZPSA to DWZZB-VW in BA670-AB System cabinet (front)
BN21K-05/10[1]	Connects from KZPSA to DWZZB-VW in BA670-AB Expansion cabinet (front or rear)

1. Manufacturing may substitute correct cable length depending on configuration.

DSSI and CI Adapters

KFPSA-AA	**PCI-based DSSI Adapter (OpenVMS only)—**Requires OpenVMS V6.2-1H2 or later; minimum System Console Firmware Revision 3.09. Maximum twelve per PCI, 24 per system with OpenVMS V6.2-1H3. (End node only). **Note**: KFPSA and KFMSB not supported on the same bus.
BC29S-xx	External shielded cable (MR/MR connectors). Select required length—09, 16, 25 feet.
BC29R-xx	External shielded cable (MR/PS connectors) Select required length—06, 09, 16, 30 feet.
CIPCA-AA	**PCI-based-CI Adapter (OpenVMS only)—**Requires OpenVMS V6.2-1H3, V7.1, or later. Maximum four per PCI, 26 per system running OpenVMS V7.1. Uses one PCI slot for adapter and one EISA slot for power only. Note: KFE70 option is **not** required.
CIPCA-BA	Same as CIPCA-AA except uses two PCI slots.
BNCIA-xx	Computer interconnect cable sets—Connects CIPCA to Star Coupler. Select required length—10, 20, or 45 m (10 m = 32.8 ft, 20 m = 65.6 ft, 45 m = 147.6 ft)

Step 6a—External Storage Controllers

- HSZ70 UltraSCSI RAID Array controllers are supported under Tru64 UNIX V4.0B or later and OpenVMS V6.2-1H3 for direct attachments or OpenVMS V7.1-1H1 or later for cluster support. See Step 7a for configuration information.
- HSZ50 family of SCSI Storage Array Controllers is supported under Tru64 UNIX V3.2G, V4.0B, V4.0D, and OpenVMS V6.2-1H3. A Tru64 UNIX patch OSF405-034 is required for dual redundant failover.
- HSJ50 family of CI Storage Array Controllers is supported under OpenVMS V6.2-1H3 with CIPCA-AA/BA or CIXCD-AC CI controllers. QB-5C4AA-SA software kits are required for each external cache (1 for HSJ50, 2 for HSJ52, 4 for HSJ54).
- HSD50 family of DSSI Storage Array Controllers is supported under OpenVMS V6.2-1H3 with minimum SRM console version V4.1-6.
- Controllers require KZPSA, KZPBA, KFPSA, CIXCD or CIPCA SCSI adapters or controllers, as appropriate.
  - HSZ70 requires QB-5SBAB-SA/SB for Tru64 UNIX, or QB-5SBAC-SA/SB for OpenVMS
  - HSZ50-Ax requires one QB-5CJAA-SA kit
  - HSZ52-Ax requires two QB-5CJAA-SA kits
  - HSZ54-AJ requires four QB-5CJAA-SA kits
  - HSD50-Ax requires one QB-5C5AA-SA kit
  - HSD52-Ax requires two QB-5C5AA-SA kits
  - HSJ50-Ax requires one QB-5C4AA-SA kit
  - HSJ52-Ax requires two QB-5C4AA-SA kits

DS-HSZ70-AH	**StorageWorks UltraSCSI RAID Array controller** includes 64 MB cache, expandable to 128 MB. requires DS-HS35X-BC external cache battery and HSZ70 Solution Software kit, order separately
HSZ50-AF	**StorageWorks RAID Array 450/HSZ50 32 MB SCSI controller** includes 6 SCSI channels, 36 SCSI-2 device connections, 32 LUN maximum, 32 MB cache module, single external cache battery SSB
HSZ50-AH	**StorageWorks RAID Array 450/HSZ50 64 MB SCSI controller** includes 6 SCSI channels, 36 SCSI-2 device connections, 32 LUN maximum, 64 MB cache module, single external cache battery SSB
HSZ50-AJ	**StorageWorks RAID Array 450/HSZ50 128 MB SCSI controller** includes 6 SCSI channels, 36 dual, 42 single SCSI-two-device connections, 32 LUN maximum, 128 MB cache module, single external cache battery SSB

Step 6a—External Storage Controllers *(continued)*

HSZ52-AF	**StorageWorks RAID Array 450/HSZ50 64 MB dual SCSI controller** includes 12 SCSI channels, 36 SCSI-two-device connections, 32 LUN maximum, 2 cache modules, 1 dual external cache battery SSB, 2 external cache batteries, 2 2-meter cables
HSZ52-AH	**StorageWorks RAID Array 450/HSZ50 128 MB dual SCSI controller** includes 12 SCSI channels, 36 SCSI-two-device connections, 32 LUN maximum, 2 cache modules, 1 dual external cache battery SSB, 2 external cache batteries, 2 2-meter cables
HSZ52-AJ	**StorageWorks RAID Array 450/HSZ50 256 MB dual SCSI controller includes** 12 SCSI channels, 36 SCSI-two-device connections, 32 LUN maximum, 2 cache modules, 1 dual external cache battery SSB, 2 external cache batteries, 2 2-meter cables
HSZ54-AJ	**StorageWorks RAID Array 450/HSZ50 512 MB quad SCSI controller** includes 12 SCSI channels, 72 SCSI-two-device connections, 64 LUN maximum, 4 cache modules, 2 dual external cache battery SSB, 4 external cache batteries, 4 2-meter cables
HSJ50-AF	32 MB cache 6 channel CI array controller with cache battery
HSJ50-AH	64 MB cache 6 channel CI array controller with cache battery
HSJ50-AJ	128 MB cache 6 channel CI array controller with cache battery
HSJ52-AF	Dual 64 MB cache CI array controller with cache batteries
HSJ52-AH	Dual 128 MB cache CI array controller with cache batteries
HSJ52-AJ	Dual 256 MB cache CI array controller with cache batteries
HSJ54-AJ	Quad 512 MB cache CI array controller with cache batteries
HSD50-AF	**DSSI controller**, 6 channel, 64 MB cache and external cache battery
HSD50-AH	**DSSI controller**, 6 channel, 32 MB cache and external cache battery
HSD50-AJ	**DSSI controller**, 6 channel, 128 MB cache and external cache battery
HSD52-AF	**Two DSSI controllers** with 32 MB cache with battery
HSD52-AH	**Two DSSI controllers** with 64 MB cache with battery
HSD52-AJ	**Two DSSI controllers** with 128 MB cache with battery

Step 7—Storage

- When multiple storage devices are configured with the system, specify which devices should be installed inside system cabinet, inside system expansion cabinet, or installed in external StorageWorks cabinet. Line item sequencing allows Manufacturing to configure storage options in the appropriate cabinet.
  - List storage options to be integrated in system cabinet immediately following the system part number
  - List storage options to be integrated in StorageWorks cabinet immediately following StorageWorks cabinet part number
  - Order the appropriate BN21*-** SCSI cables for connecting controllers and SCSI storage options.
- UltraSCSI devices are supported in UltraSCSI StorageWorks PIUs and UltraSCSI StorageWorks shelves. BA670-Ax and BA671-Ax support wide and narrow SCSI 5400 RPM and 7200 RPM disk drives.
- System cabinet provides space for four disk Plug-in Units (PIU) if no PCI Plug-in Units are installed. Each of the two pairs of expansion bays (front to back) in bottom of system cabinet can hold one Battery PIU, one PCI PIU plus one SCSI disk PIU, one SCSI disk PIU, or two SCSI disk PIUs.
- System cabinet provides space for up to seven StorageWorks shelves—three BA670-AB Plug-in Units (each includes two StorageWorks shelves) and one BA671-AA StorageWorks shelf mounted in a DWLPB. Each shelf holds a maximum of two 5.25” devices and one 3.5” device or seven 3.5” devices.
- Refer to the UltraSCSI Configuration Guidelines in EK-ULTRA-CG.C01.

UltraSCSI StorageWorks Plug-in Units

BA670-AA	**UltraSCSI Single Channel StorageWorks Plug-in Unit—**includes two DS-BA356-LE modular expansion shelves, 16-bit I/O personality module (DS-BA35X-FA), single channel I/O module, 48 V/150 W dc power supply, and AlphaServer GS140 or AlphaServer 8400 mounting hardware. Supports 16-bit wide SCSI devices and some 8-bit narrow SCSI devices depending on compliance with minimum hardware revision levels.
BA670-AB	**UltraSCSI Dual Channel StorageWorks Plug-in Unit—**includes two DS-BA356-LF modular expansion shelves, 16-bit I/O personality module (DS-BA35X-FB), dual channel I/O module, 48 V/150 W dc power supply, and AlphaServer GS140 or AlphaServer 8400 mounting hardware. Supports 16-bit wide SCSI devices and some 8-bit narrow SCSI devices depending on compliance with minimum hardware revision levels.

Step 7—Storage *(continued)*

UltraSCSI StorageWorks Shelves

BA671-AA	**UltraSCSI Single Channel StorageWorks Shelf—**includes 16-bit I/O personality module (DS-BA35X-FA), single channel I/O module, 48V/150W DC power supply, mounting hardware and DS-BA356-LE. Can be added to DWLPB-AA/AB in place of second PCI expansion box (DWLPB-BA/BB). Maximum one BA671-AA per DWLPB-AA/AB; maximum six BA671-AA per system. Supports 16-bit (wide) SCSI and some 8-bit (narrow) SCSI devices.
BA671-AB	**UltraSCSI Dual Channel StorageWorks Shelf—**includes 16-bit I/O personality module (DS-BA35X-FB), dual channel I/O module, 48V/150W DC power supply, mounting hardware and DS-BA356-LF. Can be added to DWLPB-AA/AB in place of second PCI expansion box (DWLPB-BA/BB). Maximum one BA671-AB per DWLPB-AA/AB; maximum six BA671-AB per system. Supports 16-bit (wide) SCSI and some 8-bit (narrow) SCSI devices.

SCSI Signal Converter

DS-BA35X-DA	**UltraSCSI-2 StorageWorks DOC Signal Converter**—required to convert FWD signals from KZPSA-BB or KZPBA-CB to Singe-ended for connection to DS-BA356-LE/LF StorageWorks shelves, field installed only.
DS-BA35X-FA	Fast20 Personality Module for BA356 Single Ended to Single Ended one-Channel, field installed only.
DS-BA35X-FB	Fast20 Personality Module for BA356 Single Ended to Single Ended two-Channel, field installed only.
BN38C-02	Cable for above.

UltraSCSI Hubs

UltraSCSI hubs are supported with KZPBA-CB or KZPSA-BB PCI-based differential SCSI adapters.

DS-DWZZH-03	UltraSCSI Hub with three differential ports, no single-ended ports, in a 3.5” SBB, UltraSCSI cables not included. Requires OpenVMS V7.1-1H1 or Tru64 UNIX V4.0D or later, configuration dependent, and Minimum System Console V5.2-7
DS-DWZZH-05	UltraSCSI Hub with five differential ports, no single ended ports, consisting of four host ports and one storage port, in a 5.25” SBB, UltraSCSI cables not included. Requires OpenVMS V7.1-1H1 or Tru64 UNIX V4.0D or later, configuration dependent, and Minimum System Console V5.2-7.
DS-DWZZH-21	UltraSCSI Hub with two single-ended ports, and one differential port, in 3.5” SBB, UltraSCSI cables not included. Requires OpenVMS V7.1-1H1 or Tru64 UNIX V4.0D, or later, configuration dependent, and Minimum System Console V5.2-7.

16-bit Disk Drives

DS-RZ1CF-VW	4.3 GB 7200 RPM 16-bit UltraSCSI disk drive—SBB
DS-RZ1DF-VW	9.0 GB 7200 RPM 16-bit UltraSCSI disk drive—SBB
DS-RZ1EF-VW	18.2 GB 7200 RPM 16-bit UltraSCSI disk drive—SBB, not supported on KZPAC controller
DS-RZ1DD-VW	9.1 GB 10000 RPM 16-bit UltraSCSI disk drive—SBB
DS-RZ1ED-VW	18.2 GB 10000 RPM 16-bit UltraSCSI disk drive—SBB, not supported on KZPAC controller

Note: UltraSCSI disk drives run in Fast10 SCSI mode with KZPSA-BB PCI Fast Wide Differential SCSI adapters.

8-bit Disk Drives

DS-RZ1CF-VA	4.3 GB 7200 RPM 8-bit narrow SCSI disk drive—SBB
DS-RZ1DF-VA	9.1 GB 7200 RPM 8-bit narrow SCSI disk drive—SBB
DS-RZ1EF-VA	18.2 GB 7200 RPM 8-bit narrow SCSI disk drive—SBB, not supported on KZPAC controller

Step 7—Storage *(continued)*

Tape Devices

Tape and Optical Devices are not supported on KZPAC SCSI RAID controllers.

TLZ09-VA	8.0 GB DAT 3.5” SCSI tape drive in StorageWorks carrier. OpenVMS V6.2-1H3 and Tru64 UNIX V3.2C required along with System Console Firmware Revision 3.0-9.
TLZ9L-VA	32/64 GB DAT SCSI tape loader in 5.25” StorageWorks carrier
DS-TLZ10-VA	12/24 GB 4mm DAT SCSI tape drive in 5.25” StorageWorks carrier
TZ88N-VA[1]	20/40 GB DLT SCSI tape drive in 5.25” StorageWorks carrier
DS-TZ89N-VW[1]	35/70 GB DLT SCSI tape drive in 5.25” StorageWorks carrier
DS-TL895-H2	96 Slot Library with two TZ89 drives. Includes 120 V U.S. power cord. Order country-specific power cords for non U.S. use.
DS-TL895-BA	96 Slot Library with five TZ89 DLT drives. Includes 120 V U.S. power cord. Order country-specific power cords for non U.S. use.
DS-TL895-MA	96 Slot Library with five TZ89 drives. Includes 56 pieces of DLT IV media, cleaning cartridge and documentation. Includes 120 V U.S. power cord. Order country-specific power cords for non U.S. use.
DS-TL89X-UA	Add-on TZ89 drive for TL895

1. TZ8xx DLT SCSI tape drives are supported in rear bay only.

Solid State Disks

- Supported with KZPBA and KZPSA.
- Solid State Disks cannot be combined with RZxx disks/tapes on same SCSI bus.
- 3.5-inch and 5.25-inch Solid State Disks are not supported on the same SCSI bus.

DS-EZ41-VW	134 MB Fast20 3.5” Ultra solid state disk
DS-EZ42-VW	268 MB Fast20 3.5” Ultra solid state disk
DS-EZ705-VW	536 MB Fast20 5.25” Ultra Solid state disk
DS-EZ711-VW	1.1 GB Fast20 5.25”Ultra Solid state disk
DS-EZ716-VW	1.6 GB Fast20 5.25”Ultra Solid state disk

Step 7a—UltraSCSI RAID Array Controller and UltraSCSI RAID Packaged Solutions

UltraSCSI RAID Array Controller

DS-HSZ70-AH	StorageWorks UltraSCSI RAID Array controller includes 64 MB cache, 6 UltraSCSI single-ended channels, CLI cable kit, controller to controller jumper cable, and two ECB cables. Requires HSZ70 Solutions Software Kit and external cache battery (QB-5SBAB-SA/SB or QB-5SBAC-SA/SB).

ESA 10000 Storage Arrays and RAID Array 7000 (RA7000) Options

- ESA 10000 Storage Arrays and RAID Array 7000 (HSZ70 Product Set) are supported on AlphaServer GS140 and AlphaServer 8400 systems running Tru64 UNIX V4.0B or later.
- Currently the HSZ70 is supported on the KZPSA-BB Fast Wide and the KZPBA-CB UltraSCSI Differential controller.

Step 7a—UltraSCSI RAID Array Controller and UltraSCSI RAID Packaged Solutions *(continued)*

ESA 10000 Enterprise Storage Arrays

See StorageWorks Packaged Solutions in StorageWorks Chapter of *Systems and Options Catalog*, or on the WEB at http://www.digital.com/info/SOHOME/ for additional configuration information on HSZ70 controllers in ESA 10000 and RA7000.

DS-SWXES-AA/AB ESA 10000 high capacity/general business base unit

Includes**:** Data Center 600 mm enclosure
2 BA370-AA Rackmounted shelves with 5 shelf power supplies each, expandable to 8
2 HSZ70 six port controllers 64 MB mirrored write back cache each, expandable to 128 MB each
6 Ultra SCSI expansion cables
1 10 meter host to controller cable (BN37A-10)
Serial line assembly with adapters (9 pin and 25 pin)
Power cord and documentation
Supports up to 48 drives

Requires: HSZ70 Solutions Software kit for platform, host adapter, and disks to be ordered separately
Options: 64 MB cache upgrade and fully redundant power

DS-SWXES-BA/BB ESA 10000 high bandwidth base unit

Includes: Data Center 600 mm enclosure
2 BA370-AA Rackmounted shelves with 5 shelf power supplies each, expandable to 8
4 HSZ70 six port controllers 64 MB mirrored write back cache each, expandable to 128 MB each
2 10 meter host to controller cables (BN37A-10)
Serial line assembly with adapters (9 pin and 25 pin)
Power cord and documentation
Supports up to 48 drives

Requires: HSZ70 Solutions Software kit for platform, host adapter, and disks to be ordered separately
Options: 64 MB cache upgrade and fully redundant power

DS-SWXES-CA/CB ESA 10000 dual expansion base unit

Includes: Data Center 600 mm enclosure
2 BA370-AA Rackmounted shelves with 5 shelf power supplies each, expandable to 8
12 Ultra SCSI expansion cables
SW600 cabinet joiner kit
Power cord and documentation
Supports up to 48 drives

Requires: HSZ70 Solutions Software kit for platform, host adapter, and disks to be ordered separately
Options: Fully redundant power

DS-SWXES-DA/DB ESA 10000 single expansion w/ dual controllers base unit

Includes: Data Center 600 mm enclosure
1 BA370-AA Rackmounted shelf with 5 shelf power supplies, expandable to 8
2 HSZ70 six port controllers 64 MB mirrored write back cache each, expandable to 128 MB each
1 10 meter host to controller cable (BN37A-10)
Serial line assembly with adapters (9 pin and 25 pin)
Power cord and documentation
Supports 24 drives, expandable to 48 with BA370 rackmount upgrade.

Requires: HSZ70 Solutions Software kit for platform, host adapter, and disks to be ordered separately
Options: 64 MB cache upgrade, fully redundant power, and BA370 rackmount upgrade.

Step 7a—UltraSCSI RAID Array Controller and UltraSCSI RAID Packaged Solutions *(continued)*

RAID Array 7000 (RA7000)

DS-SWXRA-HA RAID Array 7000 with Dual controllers

Includes: 24 SBB Departmental Cabinet
2 HSZ70 6 port controllers with 64 MB mirrored write-back cache each, expandable to 128 MB each
I/O expansion module
Dual cache battery in SBB with cable
Five 180 watt power supplies, expandable to eight
Fully redundant cooling
Environmental Monitor Unit (EMU)
5 meter host to controller cable BN37A-05 with BN38E-0B VHDCI to 68 HD conversion cable,
Serial line kit, controller to controller jumper cable for redundant controllers, and U.S. power cord.

Requires: HSZ70 Solutions Software Kit for platform, host adapter, and disks to be ordered separately
Options: 64 MB cache upgrade, Up to two RA7000 Expansion cabinets. Optional power supplies.

DS-SWXRA-HC RAID Array 7000 with Single controller

Includes: 24 SBB Storage Cabinet
1 HSZ70 6 port controller with 64 MB mirrored write-back cache, expandable to 128MB
I/O expansion module
Single cache battery in SBB with cable
Five 180 watt power supplies expandable to eight
Fully redundant cooling
Environmental Monitor Unit (EMU)
5 meter host to controller cable BN37A-05 with BN38E-0B VHDCI to 68 HD conversion cable,
Serial line kit, controller to controller jumper cable for redundant controllers, and U.S. power cord.

Requires: HSZ70 Solutions Software Kit for platform, host adapter, and disks to be ordered separately
Options: Second HSZ70 controller and cache battery; 64 MB cache upgrade; Up to two RA7000 Expansion cabinets. Optional power supplies.

Adapters and Platform Specific Solutions Software

- Each HSZ70 requires an HSZ70 Solutions Software Kit (HSOF).
- HSZ70 Solutions Software Kits with -SA variants include documentation
  HSZ70 Solutions Software Kits with -SB variants do not include documentation, select for each additional adapter ordered if documentation is available on-site.

HSZ70 Solutions Software Kits include:

- PCMCIA card containing software for storage controller.
- StorageWorks Command Console (SWCC) software, and software licenses.
- HSZ70 and SWCC supporting documentation.

Select Adapter and HSZ70 Solutions Software Kit for appropriate platform

Supported Adapters	HSZ70 Solutions Software Kit	Host Platform
KZPSA-BB or KZPBA-CB	**QB-5SBAB-SA/SB** **QB-5SBAC-SA/SB**	Tru64 UNIX OpenVMS

Cache Upgrade

Select cache upgrade for HSZ70 controllers. Redundant controllers require equal amounts of cache

DS-HSSIM-AB 64 MB cache upgrade for HSZ70

Step 7a—UltraSCSI RAID Array Controller and UltraSCSI RAID Packaged Solutions *(continued)*

Disk Expansion Cabinet

Note: Order Expansion Cable Kit for each Disk Expansion Cabinet selected.

DS-SWXRA-HB	Disk Expansion Cabinet, includes 24 disk slots, 5 power supplies, redundant cooling, EMU and PVA, power cable
DS-BNK37-1E	Expansion Cable Kit, required for each Disk Expansion Cabinet DS-SWXRA-HB
DS-BA35X-HH	180 Watt Power Supply. Fully redundant power requires three additional power supplies, one additional DS-BA35X-HE power control unit, and one additional DS-SW6XP-AA/AB power distribution unit.
DS-BA35X-HE	AC Power Control Unit, required when more than five 180 Watt power supplies are installed. Note: Power cord (BN27S-03) required.
DS-SW6XP-AA/AB	SW600 Power Distribution Unit, quantity of 1 required for each SW600 for full power redundancy.

Additional Options

DS-HS35X-BC	Single replacement external cache battery, one battery in a single Blue SBB
DS-HS35X-BD	Dual replacement external cache battery, two batteries in a single Blue SBB, supports cache of dual redundant controllers. Requires ordering 1 Power Verification and Addressing (PVA) DS-BA35X-EC
DS-BA35X-BA	Battery shelf for SW600 cabinet
DS-BA35X-MK	Dual speed fan kit
DS-BA35X-MN	Single-Ended I/O module
DS-BA35X-EB	Environmental Monitor Unit (EMU)
DS-BA35X-EC	Power Verification and Addressing (PVA)
BN37A-xx	Host to controller cable
BN38E-0B	68-pin HD to VHDCI UltraSCSI conversion cable
H9C10-JC	H9A10 Cabinet Joiner Kit for SW600
H8865-AA	UltraSCSI Single-Ended external terminator
H8863-AA	UltraSCSI Differential external terminator
DS-BA370-AA	Rackmountable BA370 shelf includes five 180 W power supplies, eight high power blowers, RETMA and Metric mounting kit.
DS-SW600-AA	60 Hz 600 mm Storage Cabinet includes single phase power distribution unit DS-SW6XP-AA
DS-SW600-AB	50 Hz 600 mm Storage Cabinet includes single phase power distribution unit DS-SW6XP-AA

Step 7b—External Storage Devices

The following list describes available storage devices and capacities. These supported options can be added as required.

Storage Cabinets	**Maximum Capacity**
SW5XX, SW6XX, SW8XX	1 TB – 2.9 TB
SCSI Disk Drives—See Step 7 in this section	
Tape Drives—See Storage Devices for ordering information	
TZ87, TZ875[1], TZ877, TZ88, TZ885, TZ887, TSZ07, TKZ9E, TKZ60, TKZ61, TKZ62, TKZ64-BA, TKZ9F, TL810, TL812, TL820, TL822, TL826, DS-TL893-BA[2], DS-TL894-BA[2] DS-TLZ10-VA, DS-TL896-BA[2]	
Optical Libraries	
RW546-ZA	36 GB Optical Library, 2 drives
RW551-ZC	73 GB Optical Library, 2 drives
RW552-ZF	147 GB Optical Library, 4 drives
RW555-ZF	294 GB Optical Library, 4 drives
RW557-ZF	547 GB Optical Library, 6 drives

1. Loader support for Tru64 UNIX is available via DECnsr.
2. Not supported on KZMSA XMI SCSI controllers.

Step 8—Networks and Communications

DE500 fast Ethernet network interface card included with Expanded Base Server. **Note**: Connection of system to Ethernet requires twisted pair cable.

LAN Communications Controllers–PCI based

- Requires DWLPB-AA/AB/BA/BB.
- System maximum of six DEFPA-AB/DB/UB/MB FDDIcontrollers (100 Mbit/sec).

DE450-CA	**PCI-based Ethernet 3 port Adapter**—Uses one PCI slot. OpenVMS (V6.2) and Tru64 UNIX (V3.2C) or later, support eight per PCI, maximum eight per system. Two patch kits required to support DE450 with OpenVMS V6.2.
DE500-AA	**PCI-based Fast Ethernet (100 Mbit) Adapter**—Uses one PCI slot. Tru64 UNIX V3.2G and OpenVMS V6.2 and 7.1 or later, support 8 per PCI, maximum 8 per system.
DE500-FA	**PCI-based Fast Ethernet (10/100 - 32 bit) Adapter**—Uses one PCI slot. Tru64 UNIX V4.0D and OpenVMS 7.1-1.H.1 or later, support 8 per PCI, maximum 8 per system.
DE500-BA	**PCI-based Fast Ethernet (100 Mbit) Adapter**—Uses one PCI slot. Tru64 UNIX V4.0D and OpenVMS V7.1-1H1 or later, support 8 per PCI, maximum 8 per system.
BN24Q-xx	Category 5 Cross-over Cable for point-to-point, unshielded.
BN28Q-03	Category 5 Cross-over Cable for point-to-point, shielded.
BN25G-xx	Category 5 Straight-through for system to repeater or hub, unshielded.
BN26M-xx	Twisted pair, shielded (-03, -04, -07 are the available lengths).
DEFPA-AB	**PCI-based FDDIcontroller Fiber–Single attachment station MultiMode Fiber**—Uses one PCI slot. OpenVMS V6.2-1H3 and Tru64 UNIX V3.2G or later, 6 per DWLPB supported, maximum 6 per system. Requires BN34x “SC” type connecting cable.
DEFPA-DB	**PCI-based FDDIcontroller Fiber–Dual attachment station MultiMode Fiber**—Uses one PCI slot. OpenVMS V6.2-1H3 and Tru64 UNIX V3.2G or later, 6 per DWLPB supported, maximum 6 per system. Requires BN34x “SC” type connecting cable.
BN34A-xx	MultiMode Fiber-Optic Duplex cable–“SC” connector to “ST” connector
BN34B-xx	MultiMode Fiber-Optic Duplex cable–“SC” connector to “SC” connector
BN34D-xx	MultiMode Fiber-Optic Duplex cable–“SC” connector to “MIC” connector
DEFPA-MB	**PCI-based FDDIcontroller Copper–Dual attachment station UTP**—Uses one PCI slot. OpenVMS V6.2-1H3 and Tru64 UNIX V3.2G or later, support 6 per DWLPB, maximum 6 per system. Requires BN26x or BN25H connecting cables.
DEFPA-UB	**PCI-based FDDIcontroller Copper–Single attachment station UTP**—Uses one PCI slot. OpenVMS V6.2-1H3 and Tru64 UNIX V3.2G or later, support 6 per DWLPB, maximum 6 per system. Requires BN26x or BN25H connecting cables.
BN26M-xx	8-pin MP to 8-pin MP, screened, EIA/TIA Category 5 cable
BN26S-xx	8-pin MP to 8-pin MP, screened, crossover, EIA/TIA Category 5 cable
BN25H-03	3-meter Unshielded twisted pair RJ45 connectors
DEGPA-SA	**PCI-based Gigabit Ethernet Adapter—**supported on AlphaServer 8400 systems and Tru64 UNIX V4.0D with BL11 patch kit 3. One per DWLPB, maximum 4 per system. Does not support network boot.
DGLPA-FA/UA	**PCI-based ATMworks 351 bus adapter**—Uses one PCI slot. Tru64 UNIX V4.0B or later, supports 2 per PCI, maximum 2 per system. DGLPA-FA/UA not supported on the same system as DGLPB-AB (ATMworks 350).
SN-PBXNP-AC	**PCI-based Token Ring Adapter—**Uses one PCI slot. Tru64 UNIX V3.2G or later supports two per PCI, maximum two per system. Minimum system console support for this adapter is V4.0 AXP CD release. Requires BC26M cable.
PBXDA-AA	**PCI-based Asynchronous 4 port Communication Adapter**—Tru64 UNIX V3.2G and OpenVMS V6.2-1H3 or later, support 2 per PCI, maximum 2 PBXDA-xx per system.
PBXDA-AB	**PCI-based Asynchronous 8 port Communication Adapter**—Tru64 UNIX V3.2G and OpenVMS V6.2-1H3 or later, support 2 per PCI, maximum 2 PBXDA-xx per system.
PBXDA-AC	**PCI-based Asynchronous 16 port Communication Adapter**—Tru64 UNIX V3.2G and OpenVMS V6.2-1H3 or later, support 2 per PCI, maximum 2 PBXDA-xx per system.

Step 8—Networks and Communications *(continued)*

PBXDP-AA	**PCI-based Synchronous 2 port Communications Controller**—Tru64 UNIX V3.2G and OpenVMS V6.2-1H3 and Tru64 UNIX V4.0B or later, support 2 PBXDP-xx per system
PBXDP-AB	**PCI-based Synchronous 4 port Communications Controller**—Tru64 UNIX V3.2G and OpenVMS V6.2-1H3 and Tru64 UNIX V4.0B or later, support 2 PBXDP-xx per system
PBXDP-AC	**PCI-based Synchronous 8 port Communications Controller**—Tru64 UNIX V3.2G and OpenVMS V6.2-1H3 or later, support 2 PBXDP-xx per system

LAN Communications Controllers–EISA based

- Requires DWLPB-AA and KFE70-AA, EISA bridge module set.
- See EISA Bus IRQ Address Table.

CXI01-AA	**Digiboard Asynchronous Xem/ISA Multiport Serial Card with 16 RJ45 PORTS/Xem Port**—Uses one EISA slot. Tru64 UNIX only, supports one per EISA, maximum one CXI01-AA or one CXI01-AD per system.
CXI01-AB	**Digiboard PORTS/Xem, 16 RJ45 Port Concentrator**—mounts separately from PCI bus. Maximum of three CXI01-AB can be attached to CXI01-AA, provides up to 48 additional ports. Tru64 UNIX only.
CXI01-AC	Digiboard RJ45 to DB25 Male Converter
CXI01-AF	Digiboard RJ45 to DECMJ11 Adapter—8 per package

Local and Wide Area Communications Servers

Each communications server requires 802.3/Ethernet connection. Depending on the server selected, either ThinWire BNC-type connection (e.g., BC16M cable) or thick wire 15-pin AUI transceiver cable (e.g., BNE3x) is required. Additional items also required—see the *Network Products Guide* for ordering information.

Network Connectivity Products

See the *Network Products Guide* for details.

Step 8a—MEMORY CHANNEL Controller

- Memory Channel options are supported on AlphaServer GS140 with Console Firmware V5.3-12.
- Console Firmware V5.3-12 is available on CD-ROM (AG-RFCBB-BE), and on the Web at: http://ftp.digital.com/pub/Digital/Alpha/firmware/interim/gs60gs140

Tru64 UNIX Systems

- AlphaServer 8400 requires minimum of Tru64 UNIX V3.2E (Tru64 UNIX V3.2D plus TruCluster software, or MEMORY CHANNEL Driver software).
- Each system node in a MEMORY CHANNEL cluster requires a software license.
- Servers in a compute-server array require a Tru64 UNIX Driver for MEMORY CHANNEL license.
- Servers in a TruCluster high-availability environment require a license for TruCluster for Tru64 UNIX.
- The following options are not currently supported with MEMORY CHANNEL: DJ-ML200, CIPCA, CIXCD.

OpenVMS Systems

- Requires OpenVMS V7.1 or later and OpenVMS Cluster license.
- On systems with DWLPA-AA/AB/BA/BB and no other PCI option(s) and/or KFE70-AA, a maximum of two CCMAA-BA modules are supported.
- On systems with DWLPA-AA/AB/BA/BB and any PCI option(s) and/or KFE70-AA, a maximum of one CCMAA-BA module is supported.
- DWLPB-AA/AB/BA/BB option **does not** have the restrictions of the DWLPA-AA/AB/BA/BB.

Step 8a—MEMORY CHANNEL Controller *(continued)*

MEMORY CHANNEL requirements for currently installed AlphaServer 8400 systems:

- Console firmware at revision V2.3 or higher.
- CCMAA-BA Adapter must be installed in slots 0-7 of a DWLPA-AA/AB/BA/BB PCI; no restriction for DWLPB-AA/AB/BA/BB PCI bus.
- For two-system nodes, order one CCMAA-BA per system and one BC12N-10 cable to connect them.
- For three or more system nodes, order CCMHA-AA (MEMORY CHANNEL Hub) one CCMAA-BA and one BC12N-10 cable per system node.
- CCMHA-AA (MEMORY CHANNEL Hub) is configured with four CCMLA-AA Line Cards and supports up to four nodes. Expansion up to eight system nodes can be achieved by adding up to four additional CCMLA-AA Line Cards, except TruCluster Production Server configurations.

CCMAA-BA	PCI to MEMORY CHANNEL controller–Maximum two supported
CCMHA-AA	MEMORY CHANNEL Hub with four line cards
CCMLA-AA	MEMORY CHANNEL Line Card for use with MEMORY CHANNEL Hub (CCMHA-AA)
BC12N-10	MEMORY CHANNEL Cable
QB-3RLAQ-AA	TruCluster Production Server Software for Tru64 UNIX
QB-4ZCAQ-AA	Tru64 UNIX Driver for MEMORY CHANNEL license
QL-MUZAQ-AA	OpenVMS Cluster license for Alpha systems

CCMHA-AA, MEMORY CHANNEL Hub, includes BN19P-2E line cord for Canada, Japan, US operation.
For other regions, order one of the following:

BN19A-2E	Ireland, United Kingdom
BN19S-2E	Egypt, India
BN19C-2E	Central Europe
BN18L-2E	Israel
BN19E-2E	Switzerland
BN19M-2E	Italy
BN19K-2E	Denmark
BN19H-2E	Australia, New Zealand

Step 9—Console Terminal

- VT console terminal with EIA-232 25-pin DSUB connector and printer **required,** (even with KFE72 installed) for system power-up, diagnostics and console display, unless otherwise available.
- Shielded console cable is included for connection to the console terminal.

VT510-xx	VT510 terminal
LA30N-xx	LA30 printer
LK461-xx	OpenVMS keyboard
SN-LKQ47-xx	Tru64 UNIX keyboard

Step 10—Graphics Support for Tru64 UNIX

- Graphics support for AlphaServer GS140 and AlphaServer 8400 running Tru64 UNIX V4.0D or later can be provided through the combined use of KFE72-EA port option and SN-PBXGB-AA graphics adapter.
- SN-PBXGB-AA requires 17” or 21” Professional Series monitor (Step 10a) and keyboard (Step 10d) for graphics support unless available on site.
- Selection of a video extension cable (Step 10c) and a country-specific power cord (Step 10d) is **mandatory** for all monitor variants.
- No EISA or ISA options are supported on KFE72-EA.

KFE72-EA[1]	Graphics port for AlphaServer GS140 and AlphaServer 8400 system, includes mouse and floppy drive.
SN-PBXGB-AA	PowerStorm 3D30 2D/3D graphics adapter

1. KFE70-AA and KFE72-EA are not supported concurrently on the same system, however, either option can be used to run RAID Configuration Utility (RCU).

Step 10a—AlphaServer GS140 Hardware Partition Rules

AlphaServer GS140 (Global Solution) systems running Tru64 UNIX V4.0F supports hardware partitions. A single AlphaServer GS140 can be divided into a maximum of three logical hardware partitions, each running an instance of Tru64 UNIX V4.0F. Each partition is allocated its own dedicated “share nothing” set of hardware resources (CPU module, memory module, and I/O module). Each partition is viewed as a unique node from a system point of view with its own Tru64 UNIX V4.0F operating system and application software.

- Tru64UNIX V4.0F and System Console Firmware Revision 5.4 is required for AlphaServer GS140 hardware partition support.
- Up to three hardware partitions are supported per AlphaServer GS140.
- Each partition requires a minimum of one CPU module, one memory module, one I/O module, and one DWLPB (PCI and PIU shelf) per partition.
- Hardware partitions act as totally independent system nodes—each partition has its own instance of Tru64 UNIX V4.0F, independent system console, and error log.
- For additional information concerning Tru64 UNIX V4.0F partitioning configuration hardware guidelines and console partition commands see Tru64 UNIX V4.0F SPD 41.61.22 and Tru64 UNIX V4.0F System Administration Guide, Appendix E.4.
- For information concerning OpenVMS Galaxy (APMP) Software Partitions see *Systems and Options Catalog*, OpenVMS Galaxy link at http://www.digital.com:80/SOHOME and OpenVMS Galaxy Configuration Utility at http://vmsmkt.zko.dec.com/galculator/galculator.html

Existing AlphaServer 8400 users can upgrade their system to an AlphaServer GS140 level system that supports hardware partitions with a CPU upgrade (dual Alpha 21264 6/525 MHz CPU modules), Operating System upgrade (Tru64 UNIX V4.0F), and System Console Firmware Revision 5.4. Additional hardware may be required to support hardware partitions.

Minimum Hardware Required per AlphaServer GS140 Partition

- One Dual Alpha 21264 6/525 MHz CPU module (at least one Rev. D01 CPU Alpha 21264 module per system).
- One MS7CC-EA/FA/GA memory module (1 GB, 2 GB, or 4 GB).
- One KFTHA-AA or KFTIA-AA (KFTIA-AA for installed base only)
- One DWLPB-Ax/Bx
- One KFE72-DA

Note: Each partition must have a dedicated console terminal. The first partition will obtain this support in a standard manner via the server console panel. The second and third partition will require adding a KFE72-DA , to obtain this console support. An H8571-J adapter is required to connect KFE72-DA to the console terminal.
KFE72-DA does not include a floppy which is required to support RAID Configuration Utility (RCU). Order a KFE72-EA if a floppy or graphic support is required. See Step 10.

- One console terminal; includes shielded console cable (required for each partition). See Step 9.
- One CDROM reader (or network adapter) is required per partition. Additional SCSI CD-ROM’s can be configured in Storage Works shelf using supported I/O adapters. See Step 8.
- One Tru64 UNIX Hardware Partition license per partition for second and third partition support (QM-MT4AA-AA).

Step 10a—AlphaServer GS140 Hardware Partition Rules *(continued)*

Minimum System Software Required for AlphaServer GS140 Partition Support

- System Console Firmware Revision 5.4
- Tru64 UNIX V4.0F

Restricted Options for AlphaServer GS140 Partitioned Systems

- Memory Channel is not supported. Clustering of a partitioned AlphaServer GS140 is not supported.
- NVRAM (Prestoserve Non-Volatile Random Access Memory) is not supported
- EISA devices are not supported.
- XMI is supported in first partition of an AlphaServer GS140 only.
- Future Bus is not supported.
- Supported Options List (SOL) restriction rules still apply for maximum configurations of AlphaServer GS140 systems.

Step 10b—Monitors

SN-VRQP7-24/23	17” (16.0” viewable image size) professional series auto-scanning color monitor, Trinitron CRT, 0.25 mm aperture grill pitch, VGA to 1280 x 1024 at 75 Hz, TCO 95, MPR-II, Energy Star, attached 1.8 meter video cable. Requires mandatory selection of video extension cable and country-specific power cord for all variants. –24 = Northern Hemisphere without power cord. –23 = Southern Hemisphere without power cord..
SN-VRQP1-24/23	21" (19.6" viewable image size) auto-scanning color monitor, Trinitron CRT, 0.25 mm aperture grill pitch, VGA to 1600 x 1200 at 75 Hz NI, TCO 95, Energy Star, includes a 1.8 meter video cable. Requires mandatory selection of video extension cable and country-specific power cord for all variants. –24 = Northern Hemisphere without power cord. –23 = Southern Hemisphere without power cord.

Step 10c—Video Extension Cable

BN39C-02	1.8 meter video extension cable—mandatory for each monitor ordered

Step 10d—Monitor Power Cords

BN26J-1K	North America, Japan
BN19A-2E	UK/Ireland/Hong Kong
BN19C-2E	Central Europe
BN19E-2E	Switzerland
BN19H-2E	Australia/New Zealand
BN19K-2E	Denmark
BN18L-2E	Israel
BN19M-2E	Italy
BN19S-2E	India/South Africa

Step 10e—Graphics Keyboards

SN-LKQ47-xx	Tru64 UNIX keyboard

Step 11—Expansion—System Cabinet and I/O Expansion Cabinet

Step 11a—System Cabinet

- Expanded Base System Cabinet includes two three-phase power regulators with space for one additional three-phase power regulator. System cabinets shipped after June 1996 (H9F00-FC/FD/FE Rev B03 or greater) include the H7263-AC/AD non-battery back-up ready power regulator. See Step 12 in this section for power expansion options for these system cabinets.
- Maximum four I/O channels per cabinet allowed. PCI Plug-in Units require one I/O channel connection.
- Four lower expansion bays are available for Plug-in Units. The lower bays accommodate Plug-in Units as follows.

AlphaServer GS140 and AlphaServer 8400 System Cabinet

Expansion Bay Location	Plug-In Unit (PIU)	Quantity	Expansion Bays Occupied
Lower	Disk Plug-in Unit (BA670-AA/AB)	Four maximum	Front or Rear
Lower	Battery Plug-in Unit (H7237-AA/AC/CA/CB)	One maximum	Front and Rear
Lower	PCI Plug-in Unit (DWLPB-AA)	Two maximum	Rear only

Step 11b—I/O Expansion Cabinet

- I/O Expansion Cabinet includes one three-phase power regulator.
  - Provides space for two additional three-phase power regulators
- H9F00-JC/JD/JE Rev C03 or later cabinets include the H7263-AC or H7263-AD non-BBU capable power regulator. Refer to Step 12 for expansion options.

H9F00-JC/JD/JE **I/O expansion cabinet** (top gun blue)–Three phase power, maximum two per system.
Note: -JC = 60 Hz, 208V, -JD = 50 Hz, 380/416V, -JE = 50/60 Hz, 202V.

- Expansion cabinet can be configured to hold all disk Plug-in Units or combination of disk Plug-in Units and PCI Plug-in Units.
- Six expansion bays–two upper and four lower–are available for Plug-in Units. The two upper bays accommodate maximum of two disk Plug-in Units. The four lower bays accommodate Plug-in Units as follows:

Expansion Bay Location	Plug-In Unit (PIU)	Quantity	Expansion Bays Occupied
Upper	Disk Plug-in Unit (BA670-AA/AB)	Two maximum	Front or Rear
Lower	Disk Plug-in Unit (BA670-AA/AB)	Four maximum	Front or Rear
Lower	PCI Plug-in Unit (DWLPB-AB)	Two maximum	Rear only
Lower	Battery Plug-in Unit(H7237-AA/AC/CA/CB)	One maximum	Front and Rear

DWLPB-AB **PCI Plug-in Unit for AlphaServer GS140 and AlphaServer 8400 expansion cabinet** only, maximum two per expansion cabinet. Maximum of six DWLPB-AA and DWLPB-AB (PCI PIU) per system. Requires one I/O channel connection on KFTHA-AA.

DWLPB-BB **Second PCI expansion box for mounting in DWLPB-AB**—maximum one per DWLPB-AB. Requires one I/O channel connection on KFTHA-AA.

Step 12—Power Expansion Components

- System Cabinet and Expansion Cabinets must be same type; either three-phase or single-phase. Mixing of three-phase and single-phase cabinets in same system configuration is not allowed.
- Determine the need for adding third power regulator by filling in the EPU Power Configuration Table.

Note: The Power Configuration Table provides a manual method for determining the need for a third power regulator. Equivalent power unit (EPU) is an equivalent value of power used (48 V dc) by each option.

Step 12a—Three-Phase Expansion Components

For new system orders, or for systems shipped since June 1996:

- Select additional **H7263-AC/AD** for expanded cabinets that do not require battery back-up option.
  - If EPU value of 1st regulator is exceeded
  - If N+1 redundancy is required
  - If 3rd power regulator is required
- Select **H7237-CA/CB** for systems that require battery back-up (Factory Installed).
  - Includes battery Plug-in Unit, one H7263-AA/AB power regulator and batteries for battery backup/UPS capability. Must be ordered at time of system purchase if BBU functionality is required. The H7263-AA/AB mounts alongside the standard H7263-AC/AD. Provides 8 minutes per regulator.
- Select **H7238-BA/BB** for additional battery UPS (Factory Installed).
  - Includes H7263-AA/AB and H7238-AA 4-pack battery option for second and third regulator support

For systems shipped prior to June 1996, select the following power options

H7263-AA/AB	Three-Phase 48 V dc power regulator with BBU capability—maximum three per cabinet. Second regulator may be required to supply adequate power depending on configuration. Third regulator assures N+1 power redundancy and higher availability in the event of power regulator failure. See Power Configuration Table.
H7237-AA	Battery Plug-in Unit with batteries for battery backup/UPS capability—maximum one per cabinet. Use in system cabinet and/or H9F00-BA/BB/BC expansion cabinet. Includes four batteries to support 48 V power regulator and cabling for additional H7238-AA battery options. Provides 8 minutes per regulator.
H7238-AA	4-pack battery option—one required per optional 48 V power regulator to support battery backup/UPS capability. For use only with the H7237-AA.

Note: These products will ship as spare from Manufacturing.

Battery backup I/O expansion cabinet

H9B00-AF	Battery option for I/O Expansion Cabinet—fully loaded battery cabinet supports three power regulators. Provides 16 minutes per regulator. Maximum one per H9F00-BA/BB/BC expansion cabinet.

Step 12b—Single-Phase to Three-Phase Power Upgrade

- Includes new AC distribution box with attached line cord, DC subrack, one three-phase 48VDC power regulator.
- If single phase power system has two power regulators, an additional three-phase 48VDC power regulator is required.

H7268-AA/AB	Single-Phase to Three-Phase Upgrade Kit, Converts system to three-phase power subsystem. -AA= 60 Hz, 208V, -AB = 50 Hz, 380/416V

Step 12c—Power Option for StorageWorks Shelves in StorageWorks Plug-in Units

- Provides N+1 power for BA670-AB, BA671-AA StorageWorks PIUs/shelves.
- Occupies one slot in StorageWorks shelf.

DS-BA35X-HJ	48 V dc 150W Redundant Enhanced Power Supply for BA670-AB, BA671-AA—includes 48 V dc jumper cable for connecting to first power supply in StorageWorks shelf.

Step 13—Software

See Step 1 for minimum operating system support required for AlphaServer GS140 and AlphaServer 8400 systems. Select user licenses and additional software as required. Note: Media and documentation recommended for first system on site.

Software Processor Code = Q

Tru64 UNIX Concurrent Use Licenses

Tru64 UNIX Concurrent Use licenses are not specific to a single system and can be moved from one system to another at user discretion.

Note: Tru64 UNIX AlphaServer GS140 and AlphaServer 8400 Expanded Base Servers include Traditional unlimited user license.

QL-MT7AM-3B	Tru64 UNIX Concurrent Use 1-user license
QL-MT7AM-3C	Tru64 UNIX Concurrent Use 2-user license
QL-MT7AM-3D	Tru64 UNIX Concurrent Use 4-user license
QL-MT7AM-3E	Tru64 UNIX Concurrent Use 8-user license
QL-MT7AM-3F	Tru64 UNIX Concurrent Use 16-user license
QL-MT7AM-3G	Tru64 UNIX Concurrent Use 32-user license
QL-MT7AM-3H	Tru64 UNIX Concurrent Use 64-user license
QL-MT7AQ-AA[1]	Tru64 UNIX Traditional unlimited user license
QL-MT5AQ-AA	Tru64 UNIX developer's extension license
QL-MT6AQ-AA[1]	Tru64 UNIX server extension license

1. Included in all Expanded Base Servers.

QL-MTJAQ-AA	DECnet/OSI end-system license
QL-MTKAQ-AA	DECnet/OSI extended function license
QB-05SAQ-AA	DECsafe Available Server license and documentation (Tru64 UNIX only). Media available on layered product CD-ROM. KZPSA adapter required.

Tru64 UNIX Media and Documentation

QA-MT4AA-H8	Tru64 UNIX media and on-line documentation, base system, complementary products CD-ROM
QA-MT4AA-GZ	Tru64 UNIX full hardcopy documentation
QA-MT4AB-GZ	Tru64 UNIX end user hardcopy documentation sub kit
QA-MT5AA-GZ	Tru64 UNIX developer’s extension hardcopy documentation sub kit
QA-MT6AA-GZ	Tru64 UNIX server extension hardcopy documentation sub kit

OpenVMS Concurrent Use Licenses

OpenVMS Concurrent Use license provide the right to interactively use the operating system by the specified number of concurrent users on a designated OpenVMS system. OpenVMS Concurrent Use licenses can be moved from one system to another at user discretion and can be shared in a mixed OpenVMS VAX and OpenVMS Alpha cluster.

QL-MT3AA-3B	OpenVMS Concurrent Use 1-user license
QL-MT3AA-3C	OpenVMS Concurrent Use 2-user license
QL-MT3AA-3D	OpenVMS Concurrent Use 4-user license
QL-MT3AA-3E	OpenVMS Concurrent Use 8-user license
QL-MT3AA-3F	OpenVMS Concurrent Use 16-user license
QL-MT3AA-3G	OpenVMS Concurrent Use 32-user license
QL-MT3AA-3H	OpenVMS Concurrent Use 64-user license
QL-MT3AA-3J	OpenVMS Concurrent Use 128-user license
QL-MT3AA-3K	OpenVMS Concurrent Use 256-user license
QL-MT2AQ-AA	OpenVMS Traditional unlimited user license

Step 13—Software

QL-MTFAQ-AA	DECnet/OSI end-system license
QL-MTHAQ-AA	DECnet/OSI extended function license
QL-MUZAQ-AA	OpenVMS cluster software license. Required with each system connected to an OpenVMS cluster.

OpenVMS Media and Documentation

QA-MT1AA-H8	OpenVMS media and documentation on CD-ROM
QA-09SAA-GZ	OpenVMS base hardcopy documentation
QA-001AA-GZ	OpenVMS full hardcopy documentation

Layered Products CD-ROM

QA-054AA-H8	Layered products media and documentation for Tru64 UNIX
QA-03XAA-H8[1]	Layered products media and documentation for OpenVMS

1. Includes DIGITAL Enterprise Integration Server for OpenVMS media and documentation.

DIGITAL Enterprise Integration Package—included OpenVMS Expanded Base Servers

QP-5LVAQ-AC	DIGITAL Enterprise Integration Server V2.0 for OpenVMS media and documentation. Included in expanded base servers.

Step 14—Hardware and Software Supplemental Support Services

Installation Services—AlphaServer GS140 and AlphaServer 8400 Systems

- Installation or Installation and Startup is mandatory for all AlphaServer GS140 and AlphaServer 8400 systems.
- Consult your Compaq Customer Service Account Representative for assistance in choosing the support plan that is most appropriate.
- For more information on Compaq Services see: http://www.digital.com/services.

FP-8INST-xx	Installation Service Package
FP-8STAR-xx	Installation Service and Startup Package

System Maintenance Services—AlphaServer GS140 and AlphaServer 8400 Systems

1-Year	3-Year	System Maintenance Service Packages
FP-801-12**	**FP-801**-36**	Priority
FP-811-12**	**FP-811**-36**	Priority NODE
FP-802-12**	**FP-802**-36**	Priority 24
FP-812-12**	**FP-812**-36**	Priority 24 NODE
FP-803-12**	**FP-803**-36**	Priority Plus
FP-813-12**	**FP-813**-36**	Priority Plus NODE
FP-805-12**	**FP-805**-36**	Priority Premier

Step 14—Hardware and Software Supplemental Support Services *(continued)*

Hardware—Americas and Asia Pacific only

- Systems include one-year hardware warranty, on-site, same day, 4-hour response time.
- Select optional Hardware Supplemental Support Services if required.

AlphaServer GS140 and AlphaServer 8400 Systems

Two CPUs with less than 2 GB memory	Two CPUs with 2 GB memory	Two CPUs with 4 GB memory	
FM-4Y4HR-36	**FM-4Z4HR-36**	**FM-8Z4HR-36**	Years 1-3, 5 x 9, 4-hour response time
FM-4Y512-36	**FM-4Z512-36**	**FM-8Z512-36**	Years 1-3, 5 x 12, 4-hour response time
FM-4Y616-36	**FM-4Z616-36**	**FM-8Z616-36**	Years 1-3, 6 x 16, 4-hour response time
FM-4Y724-36	**FM-4Z724-36**	**FM-8Z724-36**	Years 1-3, 7 x 24, 4-hour response time
FM-4Y4HR-60	**FM-4Z4HR-60**	**FM-8Z4HR-60**	Years 1-5, 5 x 9, 4-hour response time
FM-4Y512-60	**FM-4Z512-60**	**FM-8Z512-60**	Years 1-5, 5 x 12, 4-hour response time
FM-4Y616-60	**FM-4Z616-60**	**FM-8Z616-60**	Years 1-5, 6 x 16, 4-hour response time
FM-4Y724-60	**FM-4Z724-60**	**FM-8Z724-60**	Years 1-5, 7 x 24, 4-hour response time

Software—Americas and Asia Pacific only

- Systems include 90-day Conformance to SPD and Telephone Advisory Support. Select optional Software Supplemental Support Services, if required.
- Software service upgrades for Tru64 UNIX include advisory and remedial software support with new version license rights for Tru64 UNIX Base, unlimited users and Server Extensions.
- Software service upgrades for OpenVMS include advisory and remedial software support with new version license rights for OpenVMS Base and Enterprise Integration Package.

AlphaServer GS140 and AlphaServer 8400 Two CPU Systems (Tru64 UNIX)	
FM-D84U9-12	12-month 5x9 Bronze Software Supplemental Support for Tru64 UNIX two CPU systems
FM-D84U9-36	36-month 5x9 Bronze Software Supplemental Support for Tru64 UNIX two CPU systems
FM-D84U9-60	60-month 5x9 Bronze Software Supplemental Support for Tru64 UNIX two CPU systems
FM-D84US-12	12-month 7x24 Bronze Software Supplemental Support for Tru64 UNIX two CPU systems
FM-D84US-36	36-month 7x24 Bronze Software Supplemental Support for Tru64 UNIX two CPU systems
FM-D84US-60	60-month 7x24 Bronze Software Supplemental Support for Tru64 UNIX two CPU systems
FM-D84UN-12	12-month Bronze Node Software Supplemental Support for Tru64 UNIX two CPU systems
FM-D84UN-36	36-month Bronze Node Software Supplemental Support for Tru64 UNIX two CPU systems
FM-D84UN-60	60-month Bronze Node Software Supplemental Support for Tru64 UNIX two CPU systems

AlphaServer GS140 and AlphaServer 8400 Two CPU Systems (OpenVMS)	
FM-D84V9-12	12-month 5x9 Bronze Software Supplemental Support for OpenVMS two CPU systems
FM-D84V9-36	36-month 5x9 Bronze Software Supplemental Support for OpenVMS two CPU systems
FM-D84V9-60	60-month 5x9 Bronze Software Supplemental Support for OpenVMS two CPU systems
FM-D84VS-12	12-month 7x24 Bronze Software Supplemental Support for OpenVMS two CPU systems
FM-D84VS-36	36-month 7x24 Bronze Software Supplemental Support for OpenVMS two CPU systems
FM-D84VS-60	60-month 7x24 Bronze Software Supplemental Support for OpenVMS two CPU systems
FM-D84VN-12	12-month Bronze Node Software Supplemental Support for OpenVMS two CPU systems
FM-D84VN-36	36-month Bronze Node Software Supplemental Support for OpenVMS two CPU systems
FM-D84VN-60	60-month Bronze Node Software Supplemental Support for OpenVMS two CPU systems

Step 14a—Hardware and Software Supplemental Support Services (Europe only)

Europe does **not** have specific part numbers for Hardware and Software Supplemental Support Services. Prices can be quoted using the Excelerator tool; contact Customer Services Sales in your country for information on Hardware and Software Supplemental Support Services.

AlphaServer GS140 and AlphaServer 8400 EPU (Equivalent Power Units)–Power Configuration Table

- Mixing of three-phase and single-phase power regulators in system configuration is not allowed.
- Use chart to determine need for third power regulator.
- EPU must not exceed 180. (Note: EPUs in table based on LPAR tests).

Options	EPU Values System Cabinet Options	Quantity	Total EPU (Qty times EPU)	EPU Values Expansion Cabinet Options	Quantity	Total EPU (Qty times EPU)
Expanded Base systems include 2 three phase power regulators, CPU module, system I/O module, PCI Plug-in-Unit, memory module	30	1	30			
I/O expansion cabinet (H9F00-BA/BB/BC/JC/JD/JE) includes one power regulator					1	0
Additional dual 6/525 CPU modules—762P1-AX, 762P2-AX	14					
Additional dual 5/625 CPU modules—758P1-AX, 758P2-AX	8					
KFTHA-AA System I/O module	3					
MS7CC-EA 1 GB memory	5					
MS7CC-FA 2 GB memory	5					
MS7CC-GA 4 GB memory	5					
Add PCI options						
DWLPB-AA/AB/BA/BB	1					
KZPSA-BB	1					
KZPAC-AA/CA/CB	1					
KZPBA-CA/CB	1					
DE435-AA, DE450-AA, DE500-XA, DE500-xx	1					
DEFPA-AB/DB/UB/MB	1					
KFE70-AA/KFE72-xx	1					
Add EISA options						
CXI01-AA/AD	1					
Disk and Tape options						
8-bit SCSI disk drives	1					
16-bit SCSI disk drives	1					
TLZ07, TLZ09, TLZ9L, TLZ15-VA SCSI tape drive	1					
TZ86, TZ87, TZ88 TZ89 -VA SCSI tape drive	3					
DWZZB-VW SCSI signal converter	0					
Total						

Note: Depending on configuration, system offers integral UPS capability that supports all in-cabinet components for at least 11 minutes. If UPS support is required for external devices, e.g., console terminals, terminal servers, printers, and modems, a universal UPS can be ordered separately.

Optional Controller Configuration Table

Follow these guidelines for maximum number of ports that each operating system will support. Fill in table under the relevant area, add up the number of controllers/ports available, and verify the operating system limits will not be exceeded. **Do not exceed these values**.

Option Name	A Number of Ports/Buses	B Number of Options	C Total Ports (A * B)	Tru64 UNIX Limit	OpenVMS Limit
SCSI Options					
Included **KFTIA-AA** I/O module, one single-ended and three FWD SCSI ports	4	1	4		
Additional **KFTIA-AA** I/O module, one single-ended and three FWD SCSI ports	4				
KZPSA-BB SCSI adapter or **KZPBA** UltraSCSI adapter	1				
Add column "C"—must be less than or equal to value listed under operating system to be used**.**				**64**	**26**
802.3/Ethernet Options					
Included **KFTIA-AA** I/O module, two 802.3/Ethernet ports	2	1	2		
Additional **KFTIA-AA** I/O module, two 802.3/Ethernet ports	2				
DE450, DE500	1				
Add column "C"—must be less than or equal to value listed under operating system to be used.				**8**	**8**
FDDI Options					
Included **KFTIA-AA** I/O module, optional FDDI daughter card installed (**DEFPZ-AA/UA**)	1				
Additional **KFTIA-AA** I/O module, optional FDDI daughter card installed (**DEFPZ-AA/UA**)	1				
DEFPA-AB/-DB/-UB/MB PCI FDDIcontroller, one port each	1				
Add column "C"—must be less than or equal to value listed under operating system to be used.				**8**	**8**

EISA Bus IRQ Address Table

Configuration Rules and Information

- EISA Bus IRQ address assignments are for Tru64 UNIX and OpenVMS systems only.
- In some cases, the maximum number of each supported device is less than the number of EISA bus addresses available; this is due to other limitations.
- Only one device can occupy any given IRQ address; if multiples of a device are configured, each device occupies a separate address.
- Match each device to one available address. (Note: With the table as a worksheet, fill in "0" for each device; fill in only one "0" per column).
- Actual IRQ address assignment will be made by the EISA Configuration Utility (ECU), which is run during system manufacture, or in the installed system if the EISA bus is reconfigured.

	EISA Bus IRQ Addresses									Maximum of Each Supported	
Option	5	7	8	9	10	11	12	14	15	OpenVMS	Tru64 UNIX
CXI01-AA	NA	NA	NA	NA	NA	NA	NA	NA	NA	1	1
CXI01-AD	NA	NA	NA	NA	NA	NA	NA	NA	NA	1	1

Table Codes:
0 = address is available for device,
– = address not available for device
NA = Not Applicable

System Diagram

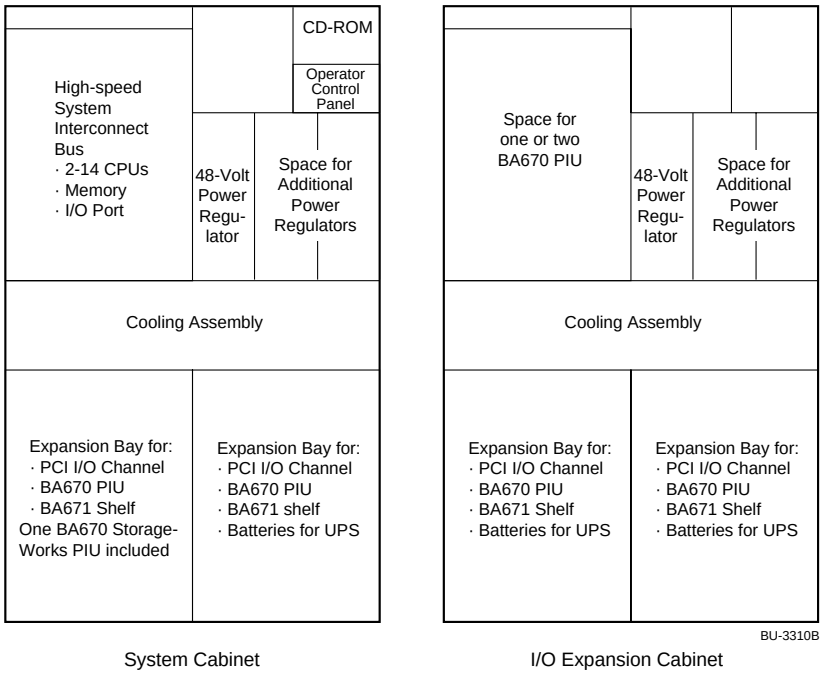

Note: Three-Phase Power Systems support up to three Power Regulators.

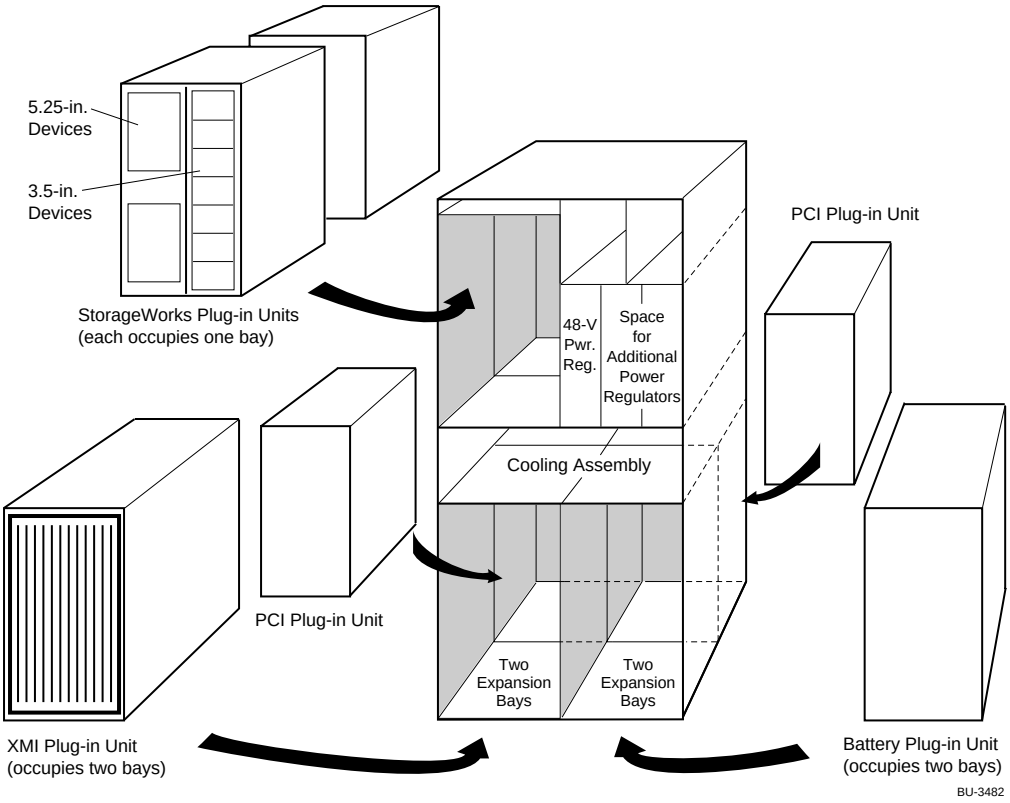

Specifications

Physical Characteristics	Operating	Shipping
Height	170.0 cm (67.0 in)	195.0 cm (76.7 in)
Width	80.0 cm (31.5 in)	109.5 cm (43.1 in)
Depth	87.5 cm (34.4 in)	121.0 cm (47.5 in)
Weight, full configuration		
Without batteries	408 kg (900 lb.)	448 kg (1000 lb.)
With batteries	545 kg (1200 lb.)	585 kg (1300 lb.)
Clearances	**Operating**	**Service**
Front	1.0 m (40 in)	1.5 m (59 in)
Rear	1.0 m (40 in)	1.0 m (40 in)
Sides	0	0
Environmental	**Operating**	**Non-Operating**
Temperature	15°C to 28°C (59°F to 82°F)	-40ºC to 66ºC (-40º F to 151ºF)
Humidity	20% to 80%	10% to 95%
Altitude	0–2.4 km (0–8000 ft)	9,100 m (30,000 ft)
Vibration	2–22 Hz @ 0.01"da minimum	22–500 Hz @ 0.25g max.
Heat dissipation[1]	**Minimally configured system**[1] (system cabinet) 3,400 Btu/hr, 1,000 W **Fully configured system**[2] (system cabinet) 15,700 Btu/hr, 4,600 W **Fully configured system**[3] (system cabinet with two I/O expansion cabinets) 30,600 Btu/hr, 9,000 W	
Regulatory		
Agency approvals	UL Listed to UL1950 UL Classified to IEC950 CSA Certified to CAN/CSA-C22.2, No. 950-M89 FCC Part 15 (Class A) CE Declaration #1171	
Reviewed to	AS 3260, Australian Standard EN 60950, European Norm	

Power Requirements[1] Three-Phase Power Subsystem[2]	US/Canada	Europe/AP	Japan
Nominal voltage	120/208 V	380–415 V	202 V
Frequency range	50–60 Hz	50–60 Hz	50–60 Hz
Phases	3-phase star 4-wire N-GND	3-phase star 4-wire N-GND	3-phase delta 4-wire mid-GND or 3-wire junction GND
Maximum input current/phase	24 A rms	12.8 A rms	24 A rms
Surge current	50 A peak	50 A peak	50 A peak
Rating	30 A	16 A	30 A
Power cap (system)	DEC 12-12314-00	DEC 12-30333-02	DEC 12-12314-00
Receptacle (site)	DEC 12-12315-01	See footnote 4	DEC 12-12315-01
(Industry equivalent)	NEMA L21-30R	IEC 309	NEMA L21-30R
PCS/PDS/PDU/UPS cable	BC24W	BN29X	BC24W

1. Minimally configured system contains one regulator, one CPU module, one memory module, one KFTIA-AA module, CD-ROM, and RZ28 disk drive.
2. Fully configured system contains two power regulators, four CPU modules, three memory modules, two System I/O modules, one DWLPB-AA, one DWLPB-BA, three BA655-AB, CD-ROM, 36 RZ28 drives.
3. Fully configured system and expansion cabinets consist of the above “fully configured system” and two expansion cabinets which each contain one DWLPB-AB, one DWLPB-BB, six KZPSA-BB, five BA655-AB, and 60 RZ28 drives.
4. Receptacle type is Hubbell 516R6 or equivalent

UPS Solutions

For complete protection, UPS products should be used with data line surge protectors. See TVSS section of Environmental Products Chapter.

4N-GA249-AB	2 wire modem	wall plug in
4N-GA249-CA	10BaseT	wall plug in
4N-GA510-BF	ThinWire	device port
4N-GA245-xx	Din rail and modules	up to 32 ports

	Receptacle Module for Plug-in Connection			
UPS Model	**60 Hz**	**50 Hz**	**AlphaServer 8400**	**External Storage**
4N-AEAAN-BA (60 Hz) **4N-AEAAN-BE (50 Hz)**	**4N-AEACM-BN**	Hardwired	Single phase	SW800
4N-AEAAN-BA (60 Hz) **4N-AEAAN-BE (50 Hz)**	**4N-AEACM-BK**	Hardwired	Three Phase	None
4N-AEAAN-BA (60 Hz) **4N-AEAAN-BE (50 Hz)**	**4N-AEACM-PA**	Hardwired	Three Phase	SW800 or Expansion Cabinet

UPS Models

4N-AEAAL-BA PUPS plus 10k V A (7 k W), single-phase, 50/60 Hz, 176-276 V in, 200 V-240 V out, 9 minutes battery at full load; hardwired with optional plug-in output receptacle modules.

4N-AEAAN-BA PUPS plus 15k V A (10k W), three-phase, 50/60 Hz, 176 V-256 V in, 200 V-240 V out, 10 minutes battery at full load; hardwired with optional plug-in output receptacle modules.

4N-AEAAN-BE PUPS plus 15 k V A (10 k W), three-phase, 50/60 Hz, International model rated 380/415 V in, 380/415/220 V out; hardwired input/output.

Options

4N-AEACK-BN PUPS plus 10k V A receptacle module (3) L6-30R, (3) 5-20R2, (2) L5-20R

4N-AEACM-BK PUPS plus 15k V A receptacle module (2) L21-30R, (3) 5-20R2

4N-AEACM-BN PUPS plus 15k V A receptacle module (2) L6-30R, (2) L21-30R, (1) 5-20R2

4N-AEACM-PA PUPS plus 15k V A dual receptacle module:
- Module 1: (2) L21-30R and conduit kit for connecting Module 1 to Module 2
- Module 2: (2) L21-30R, (3) 5-20R2

UPS Monitoring and Unattended Shutdown Software (for above UPS systems only)

Note: Power Management software is included with all AlphaServers. Software communicates with recommended UPS. Cable kit required, select UPS Communications Cable Kit.

Tru64 UNIX[1]	OpenVMS		
4N-ONLIN-NT[1]	**4N-ONLIS-FE**		UPS Communications Cable Kit
4N-AEAEO-Dx[2]	**4N-JMIU4-AB**[3]	4 port	Hardware Option for multi-systems on one UPS
4N-AEAEO-Dx[2]	**4N-AEAEO-Dx**[2]		Option for SNMP/ ServerWORKS Manager interface

Ala Carte Software kits available for existing installations

Tru64 UNIX[1]	OpenVMS		
4N-AEAES-AK	**4N-AEAES-EM**		Prestige (single system)
4N-AEAES-AK	**4N-AEAES-FM**		PUPS Plus (single system)
4N-AEAES-BK	**4N-JMMCR-AA**[4]	2 port	Multi-systems on one UPS
	4N-JMIU4-AA	4 port	
	4N-JMIU8-AA	8 port	
4N-AEAEO-Dx	**4N-AEAEO-Dx**		Network Monitoring

1. Connect-UPS network adapter required for operation on AlphaServer GS140 and AlphaServer 8400 Tru64 UNIX systems. See footnote 2.
2. Connect-UPS network adapter; D* denotes Twisted Pair / ThinWire = DA/DC (60 Hz; 120 V NEMA); DB/DD (50 Hz: 240 V IEC)
3. Multi-port interface kit with splitter cable to interface with network adapter and local shutdown signal from UPS. Kits may be daisy chained, kits include software.
4. Same as 3 above except 2 port for basic shutdown and one smart monitoring port.