Overview

At A Glance

Compaq *AlphaServer*™ ES45 Linux-Ready Systems include:

- Alpha 21264C 68/1000-MHz CPU with 8-MB L2 Dual Data Rate Cache
- Six 64-bit PCI I/O expansion slots for Model 1B (4 slots are PCI hot-plug ready) plus one AGP 4X graphics slot
- Ten 64-bit PCI I/O expansion slots for Models 2, 2B and 3B (7 slots are PCI hot-plug ready)
- Up to four PCI buses
- Model 1B
  - Two 64-bit/66-MHz PCI buses
  - One 64-bit/33-MHz PCI bus
  - One AGP 4X bus
- Model 2, 2B
  - Three 64-bit/66-MHz PCI buses
  - One 64-bit/33-MHz PCI bus
- Model 3B
  - One 64-bit/66-MHz PCI bus
  - Three 64-bit/33-MHz PCI buses
- Up to 32-GB memory using 512-MB, 1-GB, 2-GB, or 4-GB memory options
- 1.44-MB diskette drive
- 600-MB 40X IDE CD-ROM drive
- Two 9-pin serial ports
- One 25-pin parallel port
- Remote Management Console (RMC) – dedicated serial port, 6-pin MMJ connector
- Keyboard and mouse port
- Knockouts for two additional 68-pin external SCSI connections
- Auto-sensing power supply
- Integral remote system management console
- Customer documentation
- Protected by Compaq Services, including one-year hardware warranty, on-site with 5 x 9 next business day response

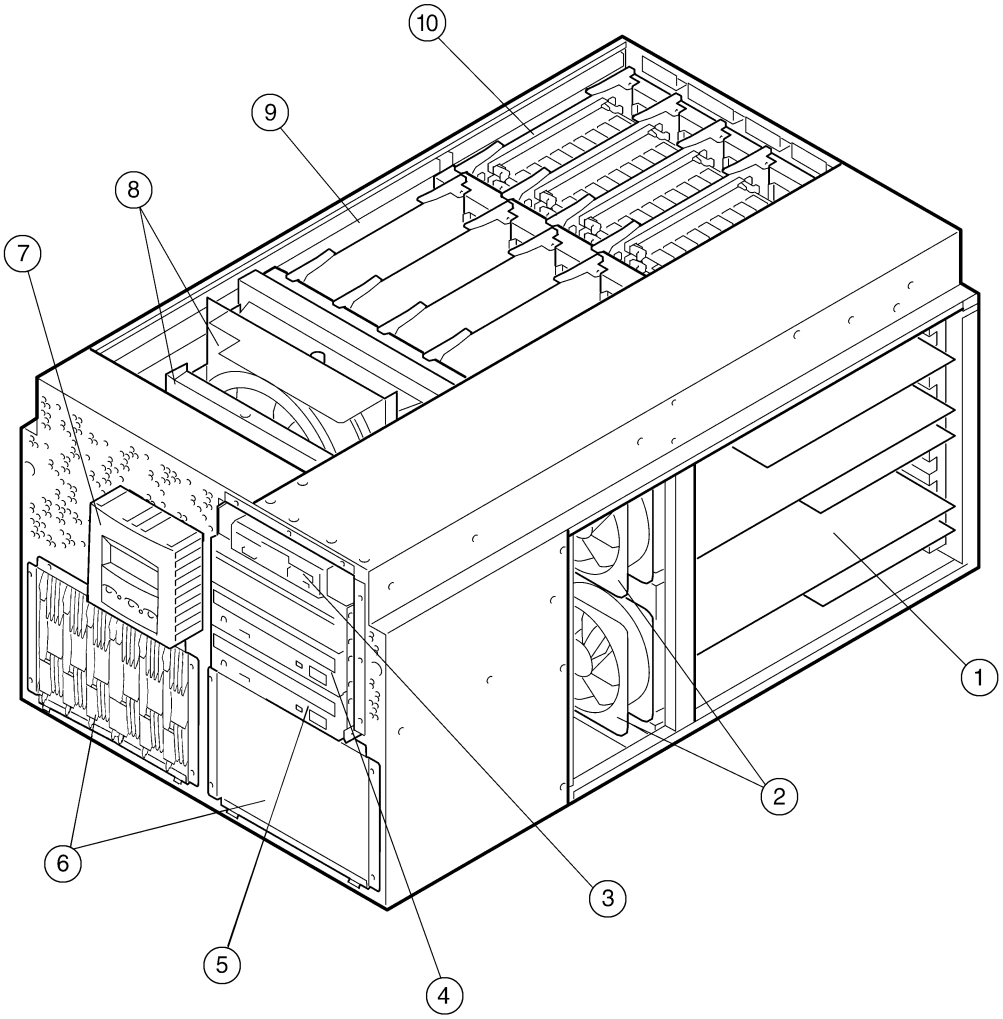

1. PCI cards
2. Fans
3. Diskette drive
4. Removable media bays
5. CD-ROM drive
6. 6-bay disk drive storage cages
7. Control panel
8. Fans
9. CPUs
10. Memory

Standard Features

Processor	Alpha 21264C 68/1000-MHz CPU	
Cache Memory	8-MB L2 Dual Data Rate Backup Cache	
Upgradability	Supports additional processors and upgrades of memory and hard drives	
Memory	Minimum	1 GB – AlphaServer ES45
	Maximum	16 GB (16 DIMM slots) – Model 1B
		32 GB (32 DIMM slots) – Model 2, Model 2B, Model 3B
Network Controller	Choice of Ethernet controllers	
Expansion	PCI I/O slots	Up to ten PCI slots – See PCI Configuration Guidelines
Storage	Diskette Drive	1.44-MB diskette drive in dedicated slot
	CD-ROM	600-MB 40X IDE CD-ROM
	Hard Drives	Choice of 18.2-GB, 36.4-GB, or 72.8-GB drives
Interfaces	Parallel	One 25-pin parallel port
	Serial	Two 9-pin serial ports
	Keyboard	One
	Mouse	One
	Remote Management Console port (RMC)	One 6-pin MMJ dedicated port
	SCSI connections	Knockouts for two additional 68-pin external SCSI connections
Graphics	Optional	
Form Factor	Tower	Up to 12 Universal disk drives
	Pedestal	Up to 40 Universal disk drives
	Rackmount (M-Series Cabinet)	Up to 152 Universal disk drives
Power Supply	Auto sensing power supply, hot swappable, N+1, power factor corrected	
Manageability	Compaq *Insight Manager*™	
Service and Support	Protected by Compaq Services including a one-year on-site hardware warranty with next business day response. Training, consulting, network integration, software support, comprehensive system maintenance and guaranteed uptime services are also available for customers requiring higher levels of service and support.	

Standard Features

AlphaServer ES45 systems are available in the following models or configurations:

- Model 1B
- Model 2B
- Model 3B
- Model 2

When configuring an AlphaServer ES45 system, refer to the following chart that summarizes the features of each model as well as the differences between each model.

ES45 Model Summary	**Model 1B**	**Model 2**	**Model 2B**	**Model 3B**
I/O Slots	7	10	10	10
- 33-MHz PCI Slots	2	4	4	8
- 66-MHz PCI Slots	4	6	6	2
- 4X AGP Slots	1	0	0	0
Hot-swap PCI Slots	4	7	7	7
Power Supplies (minimum/maximum)	1-3	2-3	1-3	1-3
Power Supply (Watts) [see Note]	3X-H7514-AA	H7906-A9	3X-H7514-AA	3X-H7514-AA
	1080 Watts	720 Watts	1080 Watts	1080 Watts
Memory (minimum/maximum)	1 GB – 16 GB	1 GB – 32 GB	1 GB – 32 GB	1 GB – 32 GB
Memory Option (4-GB Option) (All other memory options are same)	MS620-DB	MS620-DA	MS620-DB	MS620-DB
	Higher Power DIMM	Low Power DIMM	Higher Power DIMM	Higher Power DIMM
Memory Channel I/O Space (CCMAB-AA) Setting must be same for all members of cluster. See QuickSpecs Memory Channel configuration details	128K	128K	128K	512K or 128K

NOTE: For Model 1B, 2B, 3B - 3X-H7514-AA power supply is required to meet additional DIMM power requirements.

PCI Configuration Guidelines

- Modules designed for 5.0V signaling and 33-MHz bus speed can only operate in 5.0V/33-MHz slots
- Modules designed for 3.3 V signaling and 66-MHz bus speed can only operate in 66-MHz slots
- Universal PCI modules can operate in all slots (3.3V and 5.0V)
- Universal PCI modules operating at 33 MHz placed in a 66-MHz slot will reduce the entire hose to operate at 33 MHz
- Universal PCI modules capable of operating at 66 MHz when placed in a 33-MHz slot will operate at 33 MHz
- PCI hot-plug ready slots are designed to enable PCI modules to be added or removed while the system is powered and running.

PCI Module Descriptions:

- PCI modules listed in this document as 33 MHz or 66 MHz refer to the module's maximum PCI bus speed.
- Modules that can only operate at 5V are designated as 5V – 33-MHz modules.
- Universal PCI modules are designated as 3.3/5V and can be installed into 33-MHz or 66-MHz slots.

AlphaServer ES45 systems provide four I/O hoses, each is configured differently as illustrated by the following charts for Models 1B, 2B, and 3B.

Standard Features

AlphaServer ES45 PCI bus and slot specification for Model 1B follows:

PCI Slot	PCI Bus Speed	Signal Voltage	PCI Hot-Plug	PCI Hose Number
1	33 MHz	5.0V	No	0
2	33 MHz	5.0V	No	0
3	AGP 4X	1.5V	No	2
4	66 MHz	3.3V	Yes	3
5	66 MHz	3.3V	Yes	3
6				
7	66 MHz	3.3V	Yes	1
8	66 MHz	3.3V	Yes	1

AlphaServer ES45 PCI bus and slot specification for Model 2 and Model 2B follows:

PCI Slot	PCI Bus Speed	Signal Voltage	PCI Hot-Plug	PCI Hose Number
1	66 MHz	3.3V	No	2
2	66 MHz	3.3V	No	2
3	33 MHz	5.0V	No	0
4	66 MHz	3.3V	Yes	3
5	66 MHz	3.3V	Yes	3
6	33 MHz	5.0V	Yes	0
7	66 MHz	3.3V	Yes	1
8	66 MHz	3.3V	Yes	1
9	33 MHz	5.0V	Yes	0
10	33 MHz	5.0V	Yes	0

AlphaServer ES45 PCI bus and slot specification for Model 3B follows:

PCI Slot	PCI Bus Speed	Signal Voltage	PCI Hot-Plug	PCI Hose Number
1	33 MHz	5.0V	No	2
2	33 MHz	5.0V	No	2
3	33 MHz	5.0V	No	0
4	66 MHz	3.3V	Yes	3
5	66 MHz	3.3V	Yes	3
6	33 MHz	5.0V	Yes	0
7	33 MHz	5.0V	Yes	1
8	33 MHz	5.0V	Yes	1
9	33 MHz	5.0V	Yes	0
10	33 MHz	5.0V	Yes	0

Systems/Options

Step 1 – Select system

AlphaServer ES45 systems require the mandatory selection of the following items for Model 1B, Model 2, Model 2B, and Model 3B:

- Disk drive cage or *StorageWorks*™ shelf (Step 5)
- System disk drive (Step 5)
- Ethernet adapter (Step 7)
- Tower, Pedestal, or Rack Kit (Step 8)
- Order country-specific keyboard and mouse only if required (Step 14)

NOTE: For system integration of options with 6-3 part numbers, contact *Custom*Systems.

Option part numbers identified with the notation "U.S./Canada orders" and "Other country orders" refer specifically to the country where the order originates, and indicates the valid and orderable part numbers in the respective geographies.

AlphaServer ES45 Systems					
ES45		**CPU**	**I/O Slots**	**Memory/Cache**	**Order Number**
Model 2	Linux-Ready	1000 MHz	10 PCI	1 GB/8 MB	DJ-68DAA-BA
Model 2	Linux-Ready	1000 MHz	10 PCI	2 GB/8 MB	DJ-68DAA-CA
Model 2	Linux-Ready	1000 MHz	10 PCI	4 GB/8 MB	DJ-68DAA-DA
Model 1B	Linux-Ready	1000 MHz	6 PCI, 1 AGP 4X	1 GB/8 MB	DJ-66DBA-BA
Model 1B	Linux-Ready	1000 MHz	6 PCI, 1 AGP 4X	2 GB/8 MB	DJ-66DBA-CA
Model 1B	Linux-Ready	1000 MHz	6 PCI, 1 AGP 4X	4 GB/8 MB	DJ-66DBA-DA
Model 2B	Linux-Ready	1000 MHz	10 PCI	1 GB/8 MB	DJ-68DBA-BA
Model 2B	Linux-Ready	1000 MHz	10 PCI	2 GB/8 MB	DJ-68DBA-CA
Model 2B	Linux-Ready	1000 MHz	10 PCI	4 GB/8 MB	DJ-68DBA-DA
Model 3B	Linux-Ready	1000 MHz	10 PCI	1 GB/8 MB	DJ-67DBA-BA
Model 3B	Linux-Ready	1000 MHz	10 PCI	2 GB/8 MB	DJ-67DBA-CA
Model 3B	Linux-Ready	1000 MHz	10 PCI	4 GB/8 MB	DJ-67DBA-DA

Options

Step 2 – Additional CPU Modules – Optional

- One CPU included, three additional CPUs are supported

SMP upgrade, includes one 68/1000-MHz CPU with 8-MB cache	KN610-DA

Step 3 – Memory – Optional

- Systems include one memory option
- Maximum four memory options (total of 16 DIMMs) for Model 1B (one per array)
- Maximum eight memory options (total of 32 DIMMs) for Models 2, 2B, and 3B (two per array)
- AlphaServer ES45 system includes two memory buses
- AlphaServer ES45 system includes two arrays per bus
- For Models 2, 2B, and 3B, memory options within an array must be identical

512-MB memory option (4 x 128-MB DIMMs)	MS620-AA
1-GB memory option (4 x 256-MB DIMMs)	MS620-BA
2-GB memory option (4 x 512-MB DIMMs)	MS620-CA
4-GB memory option (4 x 1024-MB DIMMs); order for Model 2 systems only	MS620-DA
4-GB memory option (4 x 1024-MB DIMMs); order for Model 1B, 2B, and 3B systems only	MS620-DB

Memory performance considerations:

- When two or more memory options are installed, both buses are utilized, enhancing system performance
- Interleaved operations reduce the average latency and increase the memory throughput. When all 4 arrays are populated with the same amount of memory, read-write operations are four-way interleaved, enhancing system performance.

The following examples illustrate different ways of configuring a 4-GB system. Case C yields the best performance and is the recommended method for configuring memory on an AlphaServer ES45 system.

Base System (one memory option included)	**Memory Options**	**Total Memory**	**Total DIMMs**	**Performance**
Case A - DA-68DAJ-DA	None	4 GB	4	Good
Case B - DA-68DAJ-CA	MS620-CA	4 GB	8	Better
Case C - DA-68DAJ-BA	MS620-BA + MS620-BA + MS620-BA	4 GB	16	Best *

NOTE: * = Operating system and application dependent. Up to an 18% performance enhancement has been measured in Case C over Case A.

Step 4 – Additional Power Supply – Optional

One Power Supply	Standard with Model 1B, 2B, and 3B systems, provides system support for: • Two CPUs • One disk drive cage (up to six disk drives) • Four memory options (up to 16 DIMMs)
Two Power Supplies	Standard with Model 2 system, provides system support for: • Four CPUs • Two disk drive cages (up to twelve disk drives) • Eight memory Options (up to 32 DIMMs)
Third Power Supply	Optional – Provides (N+1) power redundancy system support for two power supply configuration

- Additional power supply ordered with a tower system requires an additional country-specific power cord
- Pedestal system and Rack kit include three internal IEC/IEC power cords regardless of the number of power supplies ordered

ES45 720W power supply; order for Model 2 systems only	H7906-A9
ES45 1080W power supply; order for Model 1B, 2B, and 3B systems only	3X-H7514-AA

Options

Step 5 – Disk Drive Cage, Universal Drive Shelf, or Universal Disk Drive – Mandatory

- Each system supports up to two disk drive cages
- Each disk drive cage supports six 1-inch universal disk drives
- 43xx StorageWorks shelves support up to 14 universal disk drives
- Pedestal enclosure supports one system and two disk drive cages, two Universal 43xx StorageWorks shelves
- M-Series cabinets supports up to five systems or one system with up to ten StorageWorks shelves

Step 5a – Disk Drive Cage – Requires selection of system disk drive

	Disk drive cage with storage cable accommodates up to six internal 1-inch Universal disk drives – Requires mandatory selection of a Storage Adapter in the system. Requires an internal Ultra2 SCSI or Ultra3 SCSI channel per disk drive cage. Maximum of two storage cages in system.	BA610-6D

NOTE: See ES45 Configuration Chart for Storage Adapters in Step 10

Universal Disk Drives *(Supported in Disk Drive Cage)*	18.2-GB Ultra3 SCSI 10,000 rpm 1-inch Universal disk drive	3R-A0585-AA
	18.2-GB Ultra3 SCSI 15,000 rpm 1-inch Universal disk drive	3R-A1543-AA
	36.4-GB Ultra3 SCSI 10,000 rpm 1-inch Universal disk drive	3R-A0919-AA
	36.4-GB Ultra3 SCSI 15,000 rpm 1-inch Universal disk drive	3R-A3079-AA
	72.8-GB Ultra3 SCSI 10,000 rpm 1-inch Universal disk drive	3R-A3050-AA

Step 5b – StorageWorks Model 4314R and Model 4354R Universal Drive Shelves

- Up to two shelves in Pedestal form factor
- See Step 9 for rack configurations with M-Series cabinets
- StorageWorks Model 4314R, 4314T and 4354R Ultra3 SCSI (LVD) single-bus and split-bus Universal drive shelves; refer to Compaq StorageWorks Enclosure 4300 Family QuickSpecs when configuring shelves. When selecting a DS-SL13R-xx split-bus shelf, two SCSI channels are required from selected storage adapters. BN38C-05 cable is required per channel.

StorageWorks Model 4314R Ultra3 SCSI (LVD) single-bus Universal drive rackmount shelf, includes one power supply, U.S. – no support for Model 4314R single-bus shelves with 3X-KZPEA-DB adapter (190209-001)	DS-SL13R-AA (All regions except Japan)
StorageWorks Model 4314R Ultra3 SCSI (LVD) single-bus Universal drive rackmount shelf, includes one power supply, Japan – no support for Model 4314R single-bus shelves with 3X-KZPEA-DB adapter	190209-291 (U.S./Canada orders for Japan variant)
	DS-SL13R-AJ (Other country orders)
StorageWorks Model 4354R Ultra3 SCSI (LVD) split-bus Universal drive rackmount shelf, includes two redundant power supplies, US (190211-001)	DS-SL13R-BA (All regions except Japan)
StorageWorks Model 4354R Ultra3 SCSI (LVD) split-bus Universal drive rackmount shelf, includes two redundant power supplies, Japan	190211-291 (U.S./Canada orders for Japan variant)
	DS-SL13R-BJ (Non U.S./Canada orders for Japan variant)
To add additional power supply for single-bus universal shelf, U.S.	212980-B21 (U.S./Canada orders)
	DS-SE2UP-AA (Other country orders)
To add additional power supply for single-bus universal shelf, International	119826-B31 (U.S./Canada orders)
	DS-SE2UP-AI (Other country orders)

Options

Step 5 – Disk Drive Cage, Universal Drive Shelf, or Universal Disk Drive – Mandatory *(continued)*

StorageWorks Model 4314T Standalone Enclosures	Model 4314T Ultra3 SCSI, Single-bus Tower Enclosure, U.S.	190210-001 (U.S./Canada orders)
		DS-SL13T-AA (Other country orders)
	Model 4314T Ultra3 SCSI, Single-bus Tower Enclosure, International	(190210-B31 (U.S./Canada orders)
		DS-SL13T-AB (Other country orders)
	Model 4314T Ultra3 SCSI, Single-bus Tower Enclosure, Japan	190210-291 (U.S./Canada orders)
		DS-SL13T-AJ (Other country orders)

Universal Disk Drives *(Supported in Model 4314R and Model 4354R Universal Drive Shelves)*	18.2-GB Ultra3 SCSI 10,000 rpm 1-inch Universal disk drive	3R-A0585-AA
	18.2-GB Ultra3 SCSI 15,000 rpm 1-inch Universal disk drive	3R-A1543-AA
	36.4-GB Ultra3 SCSI 10,000 rpm 1-inch Universal disk drive	3R-A0919-AA
	36.4-GB Ultra3 SCSI 15,000 rpm 1-inch Universal disk drive	3R-A3079-AA
	72.8-GB Ultra3 SCSI 10,000 rpm 1-inch Universal disk drive	3R-A3050-AA

Step 6 – Internal Removable Media – Optional

- System enclosure supports four internal removable devices
- System enclosure includes 1.44-MB diskette drive
- System enclosure includes 5.25-inch half-height 600-MB 40X IDE CD-ROM drive
- Removable media slots provide support for two 5.25-inch half-height devices, or one 5.25-inch full-height removable media device

5.25-inch half-height 12/24-GB 4mm DAT SCSI tape drive; requires either 3X-KZPCA-AA or 3X-KZPEA-DB adapter and SCSI cable (3X-BN46M-01)	TLZ10-LB
1-meter Ultra2 68-pin LVD cable with two device connectors, multimode terminator and two wide-to-narrow adapters (for connection of 50-pin narrow devices)	3X-BN46M-01

Step 7 – Ethernet Adapters – Mandatory

- Each adapter uses one PCI slot
- See Step 12 for additional networking options

	Maximum # Supported	PCI Slot		
PCI to dual-port 10/100 UTP Fast Ethernet adapter	1	3.3/5V	66 MHz	3X-DE602-AA
Cable for 10BaseT Twisted Pair connection				BN25G-xx
Shielded cable for 10BaseT Twisted Pair connection				BN25M-xx

Options

Step 7 – Ethernet Adapters – Mandatory *(continued)*

	Maximum # Supported	PCI Slot		
PCI Gigabit Ethernet adapter, SC connectors, MMF – no boot support Configuration Note: Adapter is qualified to operate only in PCI slots 1, 2 or 3	1	3.3/5V	66 MHz	DEGPA-SA
PCI Gigabit Ethernet adapter, (copper) – no boot support Configuration Note: Adapter is qualified to operate only in PCI slots 1, 2, 3, 4, 5, 6, 9, 10	1	3.3/5V	66 MHz	DEGPA-TA
SC-SC dual fiber optic cable, mm, pp xx = length in meters				BN34B-xx

Step 8 – System Enclosures – Mandatory selection of Tower, Pedestal, Rack Kit, Power Cords

- All AlphaServer ES45 enclosures are carbon black
- Power cords are mandatory for tower and pedestal enclosures
- Power cords are included in Rack Kits

Step 8a – Tower Enclosure

- Tower enclosure supports one system
- Selection of one country-specific power cord is mandatory for Models 1B, 2B, and 3B systems
- Selection of two country-specific power cord is mandatory for Model 2 systems
- Additional power cord is mandatory if additional power supply (N+1 redundant power) is ordered

Tower Enclosure	BA61M-CT

Step 8b – Pedestal Enclosure

- Pedestal enclosure supports one system, and up to two Universal 43xx StorageWorks shelves.
- Selection of two country-specific power cords is mandatory for all systems.

200–240V Pedestal Enclosure	BA61P-CB

Step 8c – Rack Kit for M-Series Cabinet

- Rack Kit required for each AlphaServer ES45 system installed in an M-Series Cabinet
- Rack Kit supports one system

Rack kit for AlphaServer ES45, includes dress bezel, slides, three internal IEC/IEC power cords, all brackets and hardware for mounting in M-Series cabinets	BA61R-CR

Step 8d – Power Cords

North American 200 to 240V, 75-inch – Tower	BN18J-1K
North American 200 to 240V, 108-inch – Pedestal	3X-BN64A-1C
Australia, New Zealand, 2.5-meter	103541-011 (U.S./Canada orders) BN19H-2E (Other country orders)
Central Europe, 2.5-meter	BN19C-2E
Denmark, 2.5-meter	103541-481 (U.S./Canada orders) BN19K-2E (Other country orders)
Egypt, India, South Africa, 2.5-meter	103541-AR1 (U.S./Canada orders) BN19S-2E (Other country orders)
Israel, 2.5-meter	BN18L-2E
Italy, 2.5-meter	103541-461 (U.S./Canada orders) BN35M-02 (Other country orders)

Step 8d – Power Cords *(continued)*

Japan, 2.5-meter, Dentori approved	3X-BN46F-02
Switzerland, 2.5-meter	103541-511 (U.S./Canada orders) BN19E-2E (Other country orders)
UK, Ireland, 2.5-meter	BN19A-2E

Step 9 – M-Series Cabinets

M-Series cabinet enclosures support up to five systems, or one system with up to ten StorageWorks shelves.
M-Series Cabinets require mandatory selection of the following items:

- Rear cabinet extender based on cabinet height
- Cabinet front door or trim kit based on cabinet height
- Second power distribution unit (PDU) – M-Series Cabinets include one H7602 PDU
- Factory integration
- Ballast kit, if only one system is ordered for the H9A15 cabinet

NOTE: For additional configurations beyond those listed in the following charts, contact *Custom*Systems.

Cabinet Configuration Chart for AlphaServer ES45 (8U) with 43xx Series StorageWorks Shelves (3U)

Cabinet (b)	**Front Door or Trim Kit**	**Cabinet Depth Extender**	**Power Distribution Unit**	**ES45 Systems**	**43xx Storage Shelves**	**Unused U Spaces**
H9A10-ME/-MF (34U)	H9C10-ZF or H9C10-ZT	H9C10-ZE	Second H7600	1	8	1
				2	5	2
				3	3	0
				4	0	1
H9A15-ME/-MF (41U)	H9C15-ZF or H9C15-ZT	H9C15-ZE	Second H7600	1 (a)	10	2
				2	8	0
				3	3	7
				4	0	8
			(b) With Second H7602	3	5	1
				4	2	2
				5	0	0

NOTES:

a. Installation of only one AlphaServer ES45 system in an H9A15 cabinet requires the mandatory selection of a ballast kit.

b. H9A1x-ME includes one H7602-EB PDU; H9A1x-MF includes one H7602-DB PDU -- Order second PDU.
- Single Input - H7600-DB/EB, 240V
- Dual Input - H7602-DB/EB, 240Va

Options

Step 9 – M-Series Cabinets *(continued)*

M-Series Cabinets – Specify cabinet selection	67-inch carbon black cabinet with 59.5-inch or 34U of usable vertical space, 200-240V dual-16A PDU, 12 IEC C13 outlets, two input power plug NEMA L620P, Americas, Asia Pacific; includes rear door.	H9A10-ME
	67-inch carbon black cabinet with 59.5-inch or 34U of usable vertical space, 240V dual-16A PDU, 16 IEC C13 outlets, two input power plug IEC 309, 20A, Europe; includes rear door.	H9A10-MF
	79-inch carbon black cabinet with 71.7-inch or 41U of usable vertical space, 200-240V dual-16A PDU, 12 IEC C13 outlets, two input power plug NEMA L620P, Americas, Asia Pacific; includes rear door.	H9A15-ME
	79-inch carbon black cabinet with 71.7inch or 41U of usable vertical space, 240V dual-16A PDU, 16 IEC C13 outlets, two input power plug IEC 309, 20A, Europe; includes rear door.	H9A15-MF
Rear Cabinet Extender – Mandatory based on cabinet height	Rear cabinet extender for H9A10 cabinets	H9C10-ZE
	Rear cabinet extender for H9A15 cabinets	H9C15-ZE
Front Cabinet Treatment – Mandatory based on cabinet height	Front door for H9A10 cabinet enclosure	H9C10-ZF
	Front trim kit for H9A10 cabinet enclosure	H9C10-ZT
	Front door for H9A15 cabinet enclosure	H9C15-ZF
	Front trim kit for H9A15 cabinet enclosure	H9C15-ZT
Factory Integration – Mandatory	Factory Integration of systems and storage devices assembled and configured in cabinet enclosure in predefined locations	YS-ASCAA-AA
Ballast Kit – Mandatory if only one ES45 system drawer is ordered for the H9A15 cabinet	• Ballast is added to a cabinet at particular locations for specific configurations to meet safety regulations for installation, operation, and service; see Cabinet Configuration Charts.	
	Two 35-40 lb (16–18 kg) steel plates	H9C10-MC
Power Distribution Unit – Mandatory	240V single 20A input power plug IEC 309, 12 IEC C13 outlets	H7600-DB
	200-240V single 20A input power plug NEMA L620P, with 12 IEC C13 outlets, NA/Canada/Japan	H7600-EB
	240V dual 20A input power plugs IEC 309, with 16 IEC C13 outlets	H7602-DB
	200-240V dual 20A input power plugs NEMA L620P, with 16 IEC C13 outlets, NA/Canada/Japan	H7602-EB
Storage Shelves Supported in M-Series Cabinets – Optional	StorageWorks Model 4314R Ultra3 SCSI (LVD) single-bus Universal drive rackmount shelf, U.S. – no support for Model 4314R single-bus shelves with 3X-KZPEA-DB adapter (190209-001)	DS-SL13R-AA (All regions except Japan)
	StorageWorks Model 4314R Ultra3 SCSI (LVD) single-bus Universal drive rackmount shelf, Japan – no support for Model 4314R single-bus shelves with 3X-KZPEA-DB adapter	190209-291 (U.S./Canada orders for Japan variant)
		DS-SL13R-AJ (Non U.S./Canada orders for Japan variant)
	StorageWorks Model 4354R Ultra3 SCSI (LVD) split-bus Universal drive rackmount shelf, U.S. (190211-001)	DS-SL13R-BA (All regions except Japan)
	StorageWorks Model 4354R Ultra3 SCSI (LVD) split-bus Universal drive rackmount shelf, Japan	190211-291 (U.S./Canada orders for Japan variant)
		DS-SL13R-BJ (Non U.S./Canada orders for Japan variant)

Options

Step 10 – Storage Adapters/Controllers – Mandatory

NOTE: Refer to the following chart when configuring adapters, shelves, and disks.

AlphaServer ES45 Configuration Chart for Storage Adapters

Adapter		Shelf	Disk Drive	
3X-KZPCA-AA		BA610-6D DS-SL13R-xx	3R-A0xxx-AA 1-inch Universal 3R-A1xxx-AA 1-inch Universal 3R-A3xxx-AA 1-inch Universal	
3.3/5V	33 MHz			

	Maximum # Supported	PCI Slot		
PCI 1-port Ultra2 (LVD) SCSI adapter, 32-bit/33-MHz, single-channel (uses one PCI slot); includes internal 68-pin and external 68-pin HD connectors; requires BN38C-xx cable to connect adapter to Ultra2 shelf; HSZxx RAID controllers not supported. No support for shared SCSI.	1	3.3/5V	33 MHz	3X-KZPCA-AA

Step 11 – Storage Devices – Optional

UltraSCSI Configuration Rules

- UltraSCSI configurations require UltraSCSI components (controllers, adapters, shelves, disks, and cables)
- UltraSCSI adapters and RAID controllers support UltraSCSI disks at UltraSCSI speeds in UltraSCSI shelves
- Mixing faster SCSI devices with slower SCSI devices will slow that entire SCSI bus to the slower speed.

Tape Drives

- Tape drives require single-ended UltraSCSI adapter and country-specific power cord
- For more information see http://www.compaq.com/products/storageworks/sitemap.html#tapedrives

NOTE: This website is available in English only.

AIT Tape Drives	35/70-GB AIT Hot Plug LVD Universal tape drive uses two slots in BA610-6D or 43xxx shelves	3R-A2396-AA
	50/100-GB AIT Hot Plug LVD Universal tape drive uses two slots in BA610-6D or 43xxx shelves	3R-A2779-AA
DAT Tape Drives	12/24-GB 4 mm DAT narrow single-ended tabletop SCSI tape drive with 120V North American power cord; requires 3X-KZPCA-AA LVD adapter	DS-TLZ10-DB
	20/40-GB Hot-Plug DDS4 DAT tape drive uses two slots in BA610-6D or 43xx shelves	3R-A2780-AA

Options

Step 12 – Graphics Adapters – Optional

- Select graphics adapter, monitor, and country-specific keyboard if required

	Maximum # Supported			
		PCI/AGP Slot		
3Dlabs Oxygen VX1 32-MB PCI 2D graphics accelerator; can operate in all slots; for best performance, use 66-MHz slots. Note: Only VX1 cards may be used in a multi-head environment.	1	3.3/5V	66 MHz	SN-PBXGF-AB

Step 13 – Monitors – Optional

- Graphics monitors other than those listed can be used if compatible with SVGA graphics ordered with system.
- At least one video cable, 1.8-meter length, is included with all variants of monitors.
- Video extension cable required if monitor is located more than 1.5-meter from system.

Carbon/Silver Monitors	V570 15-inch (13.8-inch viewable image size) multiple-scan color monitor, VGA to 1024 x 768 @85 Hz, 0.28 mm DP, MPRII/Energy Star Compliant, Northern Hemisphere with NA power cord, VGA cable	3R-A3383-AA 228113-001
	Same as above with Euro-power cord, TCO99	3R-A3384-AA 228113-021
	Same as above, APD, no power cord, MPRII	3R-A3385-AA 228113-B22
	Same as above, PRC with power cord, CCIB	3R-A3386-AA 228113-AA1
	Same as above, Southern Hemisphere, with Australia/New Zealand power cord	3R-A3387-AA 228113-011
	Same as above, Equatorial, for Latin America with NA power cord	3R-A3704-AA 228113-B29
	P720 17-inch (16-inch viewable image size) auto-scanning color monitor, Diamondtron NF, 0.25 mm aperture grille pitch, VGA to 1280 x 1024 @85 Hz, MPRII/TCO 99/Energy Star Compliant, Northern Hemisphere with NA power cord, VGA cable	3R-A3388-AA 244373-001
	Same as above, with Euro-power cord	3R-A3389-AA 244373-021
	Same as above, APD, no power cord	3R-A3390-AA 244373-B24
	Same as above, PRC with power cord, CCIB	3R-A3391-AA 244373-AA1
	Same as above, Southern Hemisphere, with Australia/New Zealand power cord	3R-A3392-AA 244373-011
	P920 19-inch (18-inch viewable image size) auto-scanning color monitor, Diamondtron NF, 0.24 mm aperture grille pitch, VGA to 1600 x 1200 @85 Hz, MPRII/TCO 99/Energy Star Compliant, Northern Hemisphere with NA power cord, VGA cable	3R-A3393-AA 244375-001
	Same as above, with Euro power cord	3R-A3394-AA 244375-021
	Same as above, PRC with power cord, CCIB	3R-A3396-AA 244375-AA1
	Same as above, Southern Hemisphere, 0.25 to 0.27 mm aperture grille pitch, with Australia/New Zealand power cord	3R-A3397-AA 244375-011

Options

Step 13 – Monitors – Optional *(continued)*

	P1220 22-inch (20-inch viewable image size) auto-scanning color monitor, Diamondtron NF, 0.24 mm aperture grille pitch, VGA to 1792 x 1344 @85Hz, dual video input, USB Hub, MPRII/TCO 99/Energy Star Compliant, Northern Hemisphere with NA power cord, VGA cable	3R-A3398-AA 244374-001
	Same as above, with Euro power cord	3R-A3399-AA 244374-021
	Same as above, APD, no power cord	3R-A3400-AA 244374-B24
	Same as above, PRC with power cord, CCIB	3R-A3401-AA 244374-AA1
	Same as above, Southern Hemisphere, with Australia/New Zealand power cord	3R-A3402-AA 244374-011
Carbon/Silver Flat Panel Monitors	TFT8030, 18.1-inch (18.0-inch viewable image size) TFT flat panel monitor, 0.28 mm pixel pitch, 1280 x 1024 @75 Hz, multi-mode support, MPRII/TCO99/Energy Star compliant, six video input connectors (two VGA, two DVI-I, one S-video, and one C-video), NA power cord, VGA and DVI-I cables	3R-A3511-AA 234362-001
	TFT5030, 15.1 -inch (15.0-inch viewable image size) TFT flat panel monitor, 0.30 mm pixel pitch, 1024 x 768 @75 Hz, multi-mode support, MPRII/TCO99/Energy Star compliant, two video input connectors (one VGA and one DVI-I), NA power cord, VGA and DVI-I cables	3R-A3353-AA 228134-001
Video Extension Cable	6-foot/1.8-meter video extension cable	BN39C-02
Monitor Power Cords	North America	BN26J-1K
	Australia, New Zealand, 2.5-meter	103541-011 (U.S./Canada orders) BN19H-2E (Other country orders)
	Central Europe, 2.5-meter	BN19C-2E
	Denmark, 2.5-meter	103541-481 (U.S./Canada orders) BN19K-2E (Other country orders)
	Egypt, India, South Africa, 2.5-meter	103541-AR1 (U.S./Canada orders) BN19S-2E (Other country orders)
	Israel, 2.5-meter	BN18L-2E
	Italy, 2.5-meter	103541-461 (U.S./Canada orders) BN35M-02 (Other country orders)
	Japan, 2.5-meter, Dentori approved	3X-BN46F-02
	Switzerland, 2.5-meter	103541-511 (U.S./Canada orders) (BN19E-2E (Other country orders)
	UK, Ireland, 2.5-meter	BN19A-2E

Options

Step 14 – Keyboards, Mouse, and Documentation – Optional

Step 14a – Keyboards

- Select an opal or carbon keyboard and mouse depending on the monitor color selection (opal or carbon/silver).
- Order country-specific keyboard or mouse only if required
- All keyboards listed may not be available in all geographies

Keyboard/Language	Carbon
U.S./English keyboard	3R-LKQ48-AA
Arabic keyboard	3R-LKQ48-BR
Belgian keyboard	3R-LKQ48-AB
BHCSY keyboard	3R-LKQ48-AX
Canadian/English keyboard	-
Canadian/French keyboard	3R-LKQ48-AC
Cyrillic keyboard (Russian)	3R-LKQ48-BT
Czech keyboard	3R-LKQ48-BV
Danish keyboard	3R-LKQ48-AD
Dutch keyboard	3R-LKQ48-AH
Finnish keyboard	3R-LKQ48-AF
French keyboard	3R-LKQ48-AP
German keyboard	3R-LKQ48-AG
Greek keyboard	3R-LKQ48-BH
Hebrew keyboard	3R-LKQ48-AT
Hungarian keyboard	3R-LKQ48-BQ
International keyboard	3R-LKQ48-BA
Italian keyboard	3R-LKQ48-AI
Japanese keyboard	3R-LKQ48-AJ
Korean keyboard	3R-LKQ48-BK
Latin-American keyboard	3R-LKQ48-AR
Norwegian keyboard	3R-LKQ48-AN
Polish keyboard	3R-LKQ48-BP
Portuguese keyboard	3R-LKQ48-AV
Romanian keyboard	-
Simplified Chinese keyboard	3R-LKQ48-CV
Slovak keyboard	3R-LKQ48-CZ
Spanish keyboard	3R-LKQ48-AS
Swedish keyboard	3R-LKQ48-AM
Swiss/French keyboard	3R-LKQ48-AK
Swiss/German keyboard	-
Traditional Chinese keyboard	3R-LKQ48-BI
Thai keyboard	3R-LKQ48-CB
Turkish keyboard	3R-LKQ48-BU
Turkish/French keyboard	-
UK keyboard	3R-LKQ48-AE
Yugoslavian keyboard	-

Options

Step 14 – Keyboards, Mouse, and Documentation – Optional *(continued)*

Step 14 b– Mouse

Mouse	3-button mouse – opal	SN-PBQWS-WA
	3-button mouse – carbon	3R-A3480-AA
Keyboard or Mouse Extension Cable	6-foot/1.8 meter keyboard or mouse extension cable -- to extend both keyboard and mouse order two cables	3X-BC34A-06

Step 14c – Documentation

Documentation	Additional ES45 System Information Kit (includes Owners Guide, print and CD)	QA-6NUAB-G8

Step 15 – Console Terminal – Optional

- Any terminal can be used as a console device
- Third-party console devices require an EIA-232 25-pin DSUB connector

VT510 video terminal; requires keyboard, H8575-x adapter, and BC16E-x cable	VT510-xx
Console cable, female connector (25-pin passive adapter)	H8575-A
Console cable, male connector (adapter with EOS, ESD, 25 POS D-SUB)	H8575-D

Step 16 – Software (Operating system software not included with these systems.)

Step 17 – Hardware and Software Supplemental Support Services – Optional

***CarePaq*™ Priority Services**

Select the optional CarePaq Hardware Service and CarePaq Software Service offerings described below that best support the Customer's operational requirements for system availability.

CarePaq services are designed for the growing number of customers who need support beyond the service levels provided with warranty. CarePaqs are prepaid packaged services that either extend or upgrade the standard warranty service level for hardware and/or software services.

For the AlphaServer ES45 running Linux, Priority Service CarePaqs that include integrated hardware and software services bundled together are not yet available. For AlphaServer ES45 Linux systems, hardware and software service CarePaqs must be purchased separately.

CarePaq Hardware Services for AlphaServer ES45 Linux systems are available in three service level options outlined below. CarePaq Software Services for AlphaServer ES45 Linux systems are available in incident packs for either Red Hat Linux or SuSE Linux. Red Hat Linux and SuSE Linux support must be purchased separately.

Compaq offers the CarePaq Hardware Service and CarePaq Software Services listed below for the AlphaServer ES45 Linux systems.

CarePaq Hardware Service Features

9 x 5 Next Business Day

- Hardware maintenance support call window (8 AM to 5 PM local time), Monday through Friday
- Next Business Day (NBD) on-site response
- Same service level as warranty but extended for 36 or 60 months

9 x 5/4-Hour Response

- Hardware maintenance support call window (8 AM to 5 PM local time), Monday through Friday
- On-site response within 4 hours of call logged
- Continuous effort until problem resolved
- Available in 12, 36, and 60 month options

Options

Step 17 – Hardware and Software Supplemental Support Services – Optional *(continued)*

CarePaq Hardware Service Features *(continued)*	**24 x 7/4-Hour Response** • Hardware maintenance support call window 24 x 7 • On-site response within 4 hours of call logged • Continuous effort until problem resolved • Available in 12, 36, and 60 month options **Installation Service** • Hardware maintenance support call window 24 x 7 • Pre-installation review • Unpacking of equipment • Assemble and test • Basic product usage information • No software installation
CarePaq Software Service Features	**Bronze Support** • 9 x 5 software technical support (8 AM to 5 PM local time), Monday through Friday • Callback response within 2 hours • Next available software support specialist • 24 x 7 electronic problem submission • Technical knowledge base access • Database access to newly released patch information • Service available in 10 Incident Packs
CarePaq Software Service Features	**Silver Support** • 24 x 7 software technical support • Callback response within 1 hour (8AM to 5PM local time; 2 hour callback after hours) • Technical Account Manager • 24 x 7 electronic problem submission • Technical knowledge base access • Quarterly newsletter • Quarterly software service activity review • Proactive Patch Notification • Service available in 75 Incident Packs **Gold Support** • 24 x 7 software technical support • Callback response within 30 minutes for critical calls • Technical Account Manager • Continuous effort • Critical problem management • Annual site visit • Upgrade impact planning • 24 x 7 electronic problem submission • Technical knowledge base access • Quarterly newsletter • Monthly software service activity review • Proactive Patch Notification • Service available in 100 Incident Packs

Options

Step 17 – Hardware and Software Supplemental Support Services – Optional *(continued)*

CarePaq Hardware Services	9 x 5/Next Business Day – 3 years	FM-4VXHW-36
	9 x 5/Next Business Day – 5 years	FM-4VXHW-60
	9 x 5/4 – 1 year	FM-4V4HR-12
	9 x 5/4 – 3 years	FM-4V4HR-36
	9 x 5/4 – 5 years	FM-4V4HR-60
	24 x 7/4 – 1 year	FM-4V724-12
	24 x 7/4 – 3 years	FM-4V724-36
	24 x 7/4 – 5 years	FM-4V724-60
	Installation	FM-4VINS-IN
CarePaq Software Services	**Red Hat Linux**	
	Bronze – 10 incidents	FM-SMLXB-12
	Silver – 75 incidents	FM-SMLXS-12
	Gold – 100 incidents	FM-SMLXG-12
	SuSE Linux	
	Bronze – 10 incidents	FM-SSLXB-12
	Silver – 75 incidents	FM-SSLXS-12
	Gold – 100 incidents	FM-SSLXG-12

NOTES:

- AlphaServer ES45 systems include one-year parts and labor warranty with 5 x 9, on-site Next Business Day response.
- External storage devices/cabinets carry their own level of warranty and should be quoted separately for uplifted warranty services
- In addition to the CarePaq Services listed above, annuity service contracts for AlphaServer ES45 Linux systems are available for hardware and software services. For customers who prefer unlimited support instead of Incident Packs, unlimited support for Linux is available via annuity software service contract. For more formation on Compaq service options available for *AlphaServer*s, consult your Compaq Sales Account Manager or visit http://www.compaq.com/services/

  NOTE: This website is available in English only.

Technical Specifications

Tower Configuration	**Dimensions** (H x W x D)	20 x 15.25 x 31.7 in/50.8 x 38.7 x 80.5 cm		
	Shipping Dimensions	32.2 x 24 x 40 in/82.48 x 60.2 x 101.6 cm		
	Weight	Typical Configuration	144.3 lb/65.6 kg	
		Maximum Configuration	212.8 lb/96.7 kg	
	Shipping Weight	Typical Configuration	172 lb/78 kg	
		Maximum Configuration	242 lb/110 kg	
		Clearances	**Operating**	**Service**
		Front	29.5 in/75 cm	29.5 in/75 cm
		Rear	6 in/15 cm	29.5 in/75 cm
		Left Side	None	29.5 in/75 cm
		Right Side	None	None

Pedestal Configuration	**Dimensions** (H x W x D)	30.8 x 20 x 32.4 in/78.2 x 50.8 x 82.3 cm		
	Shipping Dimensions	42.4 x 39.5 x 23.9 in/107.7 x 100.3 x 60.7 cm		
	Weight	Typical Configuration	280 lb/127 kg	
		Maximum Configuration	350 lb/159 kg	
	Shipping Weight	Typical Configuration	328 lb/149 kg	
		Maximum Configuration	407 lb/185 kg	
		Clearances	**Operating**	**Service**
		Front	29.5 in/75 cm	29.5 in/75 cm
		Rear	6 in/15 cm	29.5 in/75 cm
		Left Side	None	None
		Right Side	None	29.5 in/75 cm

Rackmount System	**Dimensions** (H x W x D)	13.87 x 17.6 x 30.8 in/35.2 x 44.7 x 78.2 cm (fits 14 in [8U] standard RETMA cabinet)		
	Shipping Dimensions	28.8 x 24 x 40 in/73.2 x 60.7 x 101.6 cm		
	Weight	When lifting:	Typical Configuration	110 lb/50 kg
			Maximum	167.2 lb/76 kg
		Total added to cabinet (brackets, slides, cables):	Typical Configuration	130 lb/59 kg
			Maximum	202.4 lb/92 kg
	Shipping Weight	Typical Configuration	158 lb/72 kg	
		Maximum	233 lb/106 kg	
		Clearances	**Operating**	**Service**
			See specific cabinet requirements	Minimum 4 ft/121.9 cm, 32.4 in/82.2 cm withdrawal on rails

Cabinet Configuration		**H9A10 M-Series**	**H9A15 M-Series**
	Dimensions (H x W x D) (Depth includes rear door extender)	67 x 23.6 x 41.5 in/ 170 x 60 x 105.4 cm	79 x 23.6 x 41.5 in/ 200 x 60 x 105.4 cm
	Shipping Dimensions	73 x 36 x 48 in/ 185.5 x 91.5 x 122 cm	85 x 36 x 48 in/ 216 x 91.5 x 122 cm
	Weight	Configuration dependent	Configuration dependent
	Shipping Weight	Nominal: 946 lb/430 kg Maximum: 1,375 lb/625 kg	Nominal: 1,056 lb/550 kg Maximum: 1,408 lb/640 kg)

Technical Specifications

System Unit

ENVIRONMENTAL

Temperature	Operating (Tower, Pedestal, Rackmount)	50° to 95° F/10° to 35° C	
	Non-operating	–40° to 151° F/–40° to 66° C	
	Storage (60 days)	–40° to 151° F/–40° to 66° C	
	Rate of change	20°F/hr/11°C/hr	
	NOTE: Maximum operating temperature at sea level; reduce by 1.8°F (1°C) for each 2,000 ft (600 m) above sea level.		
Humidity	Operating	20% to 80%	
	Non-operating	20% to 80%	
	Storage (60 days)	10% to 95%	
	Rate of change	20% hr	
Maximum Wet Bulb Temperature	Operating	82° F/28° C	
	Storage (60 days)	115° F/46° C	
Maximum Dew Point Temperature	Operating	36° F/2° C	
Heat Dissipation		**Nominal**	**Maximum**
	Tower and Rack	980W, 3347 BTU/hr	1440W, 4918 BTU/hr
	Pedestal	1560W, 5328 BTU/hr	2400W, 8196 BTU/hr
	H9A10/H9A15 Cabinets	Configuration dependent	4800W, 16392 BTU/hr
Air Flow and Quality	Intake location	Front	
	Exhaust location	Rear Tower, Pedestal, Rack; Rear/top H9A10/H9A15	
	Particle size	N/A	
	Concentration	N/A	
Altitude (unpressurized)	Operating	10,000 ft/3,048 m	
	Non-operating	40,000 ft/12,192 m	
	NOTE: Maximum operating temperature at sea level; reduce by 1.8°F (1°C) for each 2,000 ft (600 m) above sea level.		

ACOUSTICS (Declared values per ISO 9296 and ISO 7779)

Acoustics		**L_{WAd3}B**	**L_{nAm5}dBA** (bystander position)
	Idle	6.4	47
	Operating	6.4	47
	NOTE: Current values for specific configurations are available from Compaq, note that 1 B = 10 dBA.		
Vibration	Operating	10 to 500 Hz 0.1 G peak	
	Non-operating	1.03 Grms 5-300 Hz	

ELECTRICAL (Power supplies are universal, PFC, auto ranging, 200-240 VAC)

Nominal Voltage (VAC)	200 to 240
Voltage Range (VAC) **temporary condition**	180 to 250
Power Source Phase	Single
Nominal Frequency (Hz)	50/60
Frequency Range (Hz)	47 to 53/57 to 63

Technical Specifications

System Unit *(continued)*

ELECTRICAL (Power supplies are universal, PFC, auto ranging, 200-240 VAC) *(continued)*

RMS Current

	Tower and Rackmount	Single power cord	5.6A
		Multiple power cords	3.6A
		Maximum VA	1440
	Pedestal	Each power cord	8.6A
		Maximum VA	2070
	M-Series Cabinet (configuration dependent)	Nominal voltage (VAC)	200 to 240
		Each power cord	16A
Power Cords	Tower (mandatory)	Up to 3 (Country specific)	IEC 320 to country-specific
	Pedestal (mandatory)	2 (Country specific)	IEC 320 C13 to country-specific
	Rackmount (included)	3 (14 ft 10 in/52 cm)	IEC 320 C13 to IEC 320 C14
	Cabinet (included)	Up to 4 (10 ft /305 cm)	200-240V non-removable NEMA L6-20P for North America or 200-240V non-removable IEC 309
	Tower (mandatory)	Up to 3 (Country specific)	IEC 320 to country-specific
Regulatory	Agency Approvals	UL: Listed to UL1950 3rd edition	
		UL CNL: Certified to CAN/CSA-C22.2 No. 950-1995	
		TUV: EN 60950/A11:1997, GS marked	
		FCC: Part 15.B Class A	
		IC ICES-003 Class A	
		CE: EN55022:1998, EN55024:1998, EN61000-3-2:1995, EN61000-3-3:1995	
		VCCI:V-3/97.04 Class A	
		BSMI: CNS13438 Class A	
		C-Tick: AS/NZS 3548:1995 Class A	
	Reviewed to	AS/NZ 3260:1993 Australian/New Zealand Standard	
		EN 60950:2000	
		IEC 60950:1999, 3rd edition	
		UL 60950, 3rd edition, 2000	

© 2002 Compaq Information Technologies Group, L.P. All rights reserved.
Compaq, the Compaq logo, AlphaServer, CarePaq, Compaq Insight Manager, and StorageWorks are trademarks of Compaq Information Technologies Group, L.P. in the U.S. and/or other countries. All other product names mentioned herein may be trademarks or registered trademarks of their respective companies.

Compaq shall not be liable for technical or editorial errors or omissions contained herein. The information is provided "as is" without warranty of any kind and is subject to change without notice. The warranties for Compaq products are set forth in the express limited warranty statements accompanying such products. Nothing herein should be construed as constituting an additional warranty.