Overview

At A Glance

AlphaServer™ ES45 Systems include:

- Alpha 21264C 68/1000-MHz CPU with 8-MB L2 Dual Data Rate Cache or
- Alpha 21264D 68/1250-MHz CPU with 16-MB L2 Dual Data Rate Cache
- Six 64-bit PCI I/O expansion slots for Model 1B (4 slots are PCI hot-plug ready) plus one AGP 4X graphics slot
- Ten 64-bit PCI I/O expansion slots for Models 2, 2B, and 3B (7 slots are PCI hot-plug ready)
- Up to four PCI buses
  Model 1B or Model 1
  - Two 64-bit/66-MHz PCI buses
  - One 64-bit/33-MHz PCI bus
  - One AGP 4X bus
  Model 2B or Model 2
  - Three 64-bit/66-MHz PCI buses
  - One 64-bit/33-MHz PCI bus
  Model 3B or Model 3
  - One 64-bit/66-MHz PCI bus
  - Three 64-bit/33-MHz PCI buses
- Up to 32-GB memory using 512-MB, 1-GB, 2-GB, or 4-GB memory options
- 1.44-MB diskette drive
- 16X DVD-ROM drive
- Two 9-pin serial ports
- One 25-pin parallel port
- Remote Management Console (RMC) – dedicated serial port, 6-pin MMJ connector
- Keyboard and mouse port
- Knockouts for two additional 68-pin external SCSI connections
- One power supply
- Integral remote system management console
- Customer documentation
- *Tru64*™ UNIX™ or *OpenVMS*™ Factory Installed Software
- Protected by HP Services, including one-year hardware warranty, on-site with 5 x 9 next business day response. Certain restrictions and exclusions apply. For details, consult the Product Information Centre at 1-888-882-6672.

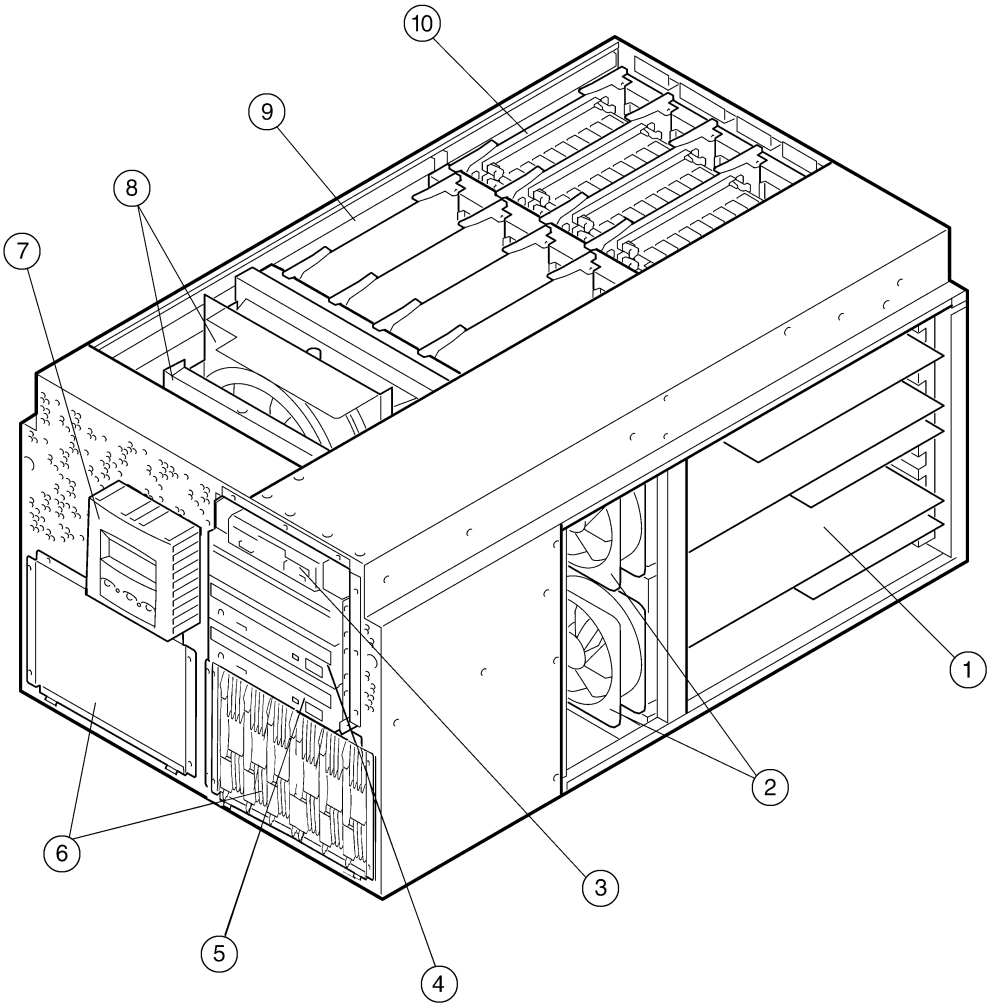

1. PCI cards
2. Fans
3. Diskette drive
4. Removable media bays
5. DVD-ROM drive
6. 6-bay disk drive storage cages
7. Control panel
8. Fans
9. CPUs
10. Memory

Standard Features

Processor	Alpha 21264C 68/1000-MHz CPU or Alpha 21264D 68/1250-MHz CPU	
Cache Memory	8-MB (1 GHz) or 16-MB (1.25 GHz) L2 Dual Data Rate Backup Cache	
Upgradability	Supports additional processors and upgrades of memory and hard drives	
Memory	Minimum	1 GB – AlphaServer ES45
	Maximum	16 GB (16 DIMM slots) – Model 1B, or Model 1
		32 GB (32 DIMM slots) – Model 2B or Model 2, Model 3B or Model 3
Network Controller	Choice of Ethernet controllers	
Expansion	PCI I/O slots	Up to ten PCI slots – See PCI Configuration Guidelines
Storage	Diskette Drive	1.44-MB diskette drive in dedicated slot
	DVD-ROM Drive	16X DVD-ROM drive
	Hard Drives	Choice of 18.2-GB, 36.4-GB, or 72.8-GB drives
Interfaces	Parallel	One 25-pin parallel port
	Serial	Two 9-pin serial ports
	Keyboard	One
	Mouse	One
	Remote Management Console port (RMC)	One 6-pin MMJ dedicated port
	SCSI connections	Knockouts for two additional 68-pin external SCSI connections
Graphics	Optional	
Form Factor	Tower	Up to 12 Universal disk drives
	Pedestal	Up to 40 Universal disk drives
	Rackmount (M-Series Cabinet)	Up to 152 Universal disk drives
Power Supply	One auto sensing power supply, hot swappable, N+1, power factor corrected	
Manageability	Compaq *Insight Manager*™	
OS Support	AlphaServer ES45 Tru64 UNIX systems include pre-installed software, Base license, Unlimited User license, Server Extension license, Internet Express and iPlanet Web Server – Enterprise Edition 4.0 AlphaServer ES45 OpenVMS systems include pre-installed software, Base license with System Manager license and Enterprise Integration Server License Package for OpenVMS V3.1 Minimum OS support – Tru64 UNIX V5.1A or OpenVMS V7.3	
Service and Support	Protected by HP Services including a one-year on-site hardware warranty with next business day response. Training, consulting, network integration, software support, comprehensive system maintenance and guaranteed uptime services are also available for customers requiring higher levels of service and support. Certain restrictions and exclusions apply. For details, consult the Product Information Centre at 1-888-882-6672.	

Standard Features

AlphaServer ES45 systems are available in the following models or configurations:

- Model 1B (1 GHz) or Model 1 (1.25 GHz)
- Model 2B (1 GHz) or Model 2 (1.25 GHz)
- Model 3B (1 GHz) or Model 3 (1.25 GHz)

When configuring an AlphaServer ES45 system, refer to the following chart that summarizes the features of each model as well as the differences between each model.

AlphaServer ES45 Model Summary	**Model 1B (1 GHz) Model 1 (1.25 GHz)**	**Model 2B (1 GHz) Model 2 (1.25 GHz)**	**Model 3B (1 GHz) Model 3 (1.25 GHz)**
I/O Slots	7	10	10
- 33-MHz PCI Slots	2	4	8
- 66-MHz PCI Slots	4	6	2
- 4XAGP Slots	1	0	0
Hot-swap PCI Slots	4	7	7
Power Supplies (Minimum/Maximum)	1-3	1-3	1-3
Power Supply (DC Watts) One included – maximum three power supplies per system	3X-H7514-AA	3X-H7514-AA	3X-H7514-AA
	1080 Watts	1080 Watts	1080 Watts
Memory (Minimum/Maximum)	1 GB – 16 GB	1 GB – 32 GB	1 GB – 32 GB
Memory Option (4-GB Option)	MS620-DB	MS620-DB	MS620-DB
	Higher Power DIMM	Higher Power DIMM	Higher Power DIMM
Memory Channel I/O Space (CCMAB-AA) See Memory Channel – Step 9	128K	128K	512K or 128K

NOTE: Minimum firmware for 1.25-GHz systems is V6.2-8, minimum SROM firmware is V2.22-F. Firmware files are available at: http://ftp.digital.com/pub/Digital/Alpha/firmware/interim/es45/v6.2C/

PCI Configuration Guidelines

- Modules designed for 5.0 V signaling and 33-MHz bus speed can only operate in 5.0 V/33-MHz slots
- Modules designed for 3.3 V signaling and 66-MHz bus speed can only operate in 66-MHz slots
- Universal PCI modules can operate in all slots (3.3 V and 5.0 V)
- Universal PCI modules operating at 33 MHz placed in a 66-MHz slot will reduce the entire hose to operate at 33 MHz
- Universal PCI modules capable of operating at 66 MHz when placed in a 33-MHz slot will operate at 33 MHz
- PCI hot-plug ready slots are designed to enable PCI modules to be added or removed while the system is powered and running. Subsequent operating system versions above Tru64 UNIX V5.1A and OpenVMS V7.3 will provide support for hot-plug PCI functionality

PCI Module Descriptions:

- PCI modules listed in this document as 33 MHz or 66 MHz refer to the module's maximum PCI bus speed.
- Modules that can only operate at 5 V are designated as 5 V – 33-MHz modules.
- Universal PCI modules are designated as 3.3/5 V and can be installed into 33-MHz or 66-MHz slots.

AlphaServer ES45 systems provide four I/O hoses, each is configured differently as illustrated in the following charts for Models 1B, 2B, and 3B.

PCI Configuration Guidelines *(continued)*

AlphaServer ES45 PCI bus and slot specification for Model 1B or Model 1 follows:

PCI Slot	PCI Bus Speed	Signal Voltage	PCI Hot-Plug	PCI Hose Number
1	33 MHz	5.0 V	No	0
2	33 MHz	5.0 V	No	0
3	AGP 4X	1.5 V	No	2
4	66 MHz	3.3 V	Yes	3
5	66 MHz	3.3 V	Yes	3
6	-	-	-	-
7	66 MHz	3.3 V	Yes	1
8	66 MHz	3.3 V	Yes	1

AlphaServer ES45 PCI bus and slot specification for Model 2B or Model 2 follows:

PCI Slot	PCI Bus Speed	Signal Voltage	PCI Hot-Plug	PCI Hose Number
1	66 MHz	3.3 V	No	2
2	66 MHz	3.3 V	No	2
3	33 MHz	5.0 V	No	0
4	66 MHz	3.3 V	Yes	3
5	66 MHz	3.3 V	Yes	3
6	33 MHz	5.0 V	Yes	0
7	66 MHz	3.3 V	Yes	1
8	66 MHz	3.3 V	Yes	1
9	33 MHz	5.0 V	Yes	0
10	33 MHz	5.0 V	Yes	0

AlphaServer ES45 PCI bus and slot specification for Model 3B or Model 3 follows:

PCI Slot	PCI Bus Speed	Signal Voltage	PCI Hot-Plug	PCI Hose Number
1	33 MHz	5.0 V	No	2
2	33 MHz	5.0 V	No	2
3	33 MHz	5.0 V	No	0
4	66 MHz	3.3 V	Yes	3
5	66 MHz	3.3 V	Yes	3
6	33 MHz	5.0 V	Yes	0
7	33 MHz	5.0 V	Yes	1
8	33 MHz	5.0 V	Yes	1
9	33 MHz	5.0 V	Yes	0
10	33 MHz	5.0 V	Yes	0

Systems/Options

Step 1 – Select system

AlphaServer ES45 systems require the mandatory selection of the following items for Model 1B or Model 1, Model 2B or Model 2, and Model 3B or Model 3:

- Disk drive cage or *StorageWorks*™ shelf (Step 5)
- System disk drive (Step 5)
- Tower, Pedestal, or Rack Kit (Step 6)
- Ethernet adapter (Step 8)
- Storage adapter (Step 10)
- Order country-specific keyboard and mouse only if required (Step 14)
- Software media and documentation for first system onsite (Step 16)

NOTE: For system integration of options with 6-3 part numbers for non-U.S./Canada orders, contact CustomSystems. Option part numbers identified with the notation "U.S./Canada orders" and "Other country orders" refer specifically to the country where the order originates, and indicates the valid and orderable part numbers in the respective geographies.

AlphaServer ES45 Systems (1000 MHz)					
ES45	**OS**	**CPU**	**I/O Slots**	**Memory/Cache**	**Order Number**
Model 1B	Tru64 UNIX	1000 MHz	6 PCI, 1 AGP 4X	1 GB/8 MB	DA-66DBA-BA
Model 1B	Tru64 UNIX	1000 MHz	6 PCI, 1 AGP 4X	2 GB/8 MB	DA-66DBA-CA
Model 1B	Tru64 UNIX	1000 MHz	6 PCI, 1 AGP 4X	4 GB/8 MB	DA-66DBA-DA
Model 1B	OpenVMS	1000 MHz	6 PCI, 1AGP 4X	1 GB/8 MB	DY-66DBA-BA
Model 1B	OpenVMS	1000 MHz	6 PCI, 1 AGP 4X	2 GB/8 MB	DY-66DBA-CA
Model 1B	OpenVMS	1000 MHz	6 PCI, 1AGP 4X	4 GB/8 MB	DY-66DBA-DA
Model 2B	Tru64 UNIX	1000 MHz	10 PCI	1 GB/8 MB	DA-68DBA-BA
Model 2B	Tru64 UNIX	1000 MHz	10 PCI	2 GB/8 MB	DA-68DBA-CA
Model 2B	Tru64 UNIX	1000 MHz	10 PCI	4 GB/8 MB	DA-68DBA-DA
Model 2B	OpenVMS	1000 MHz	10 PCI	1 GB/8 MB	DY-68DBA-BA
Model 2B	OpenVMS	1000 MHz	10 PCI	2 GB/8 MB	DY-68DBA-CA
Model 2B	OpenVMS	1000 MHz	10 PCI	4 GB/8 MB	DY-68DBA-DA
Model 3B	Tru64 UNIX	1000 MHz	10 PCI	1 GB/8 MB	DA-67DBA-BA
Model 3B	Tru64 UNIX	1000 MHz	10 PCI	2 GB/8 MB	DA-67DBA-CA
Model 3B	Tru64 UNIX	1000 MHz	10 PCI	4 GB/8 MB	DA-67DBA-DA
Model 3B	OpenVMS	1000 MHz	10 PCI	1 GB/8 MB	DY-67DBA-BA
Model 3B	OpenVMS	1000 MHz	10 PCI	2 GB/8 MB	DY-67DBA-CA
Model 3B	OpenVMS	1000 MHz	10 PCI	4 GB/8 MB	DY-67DBA-DA

Step 1 – Select system *(continued)*

AlphaServer ES45 Systems (1250 MHz) *(continued)*

AlphaServer ES45 Systems (1250 MHz)

ES45	OS	CPU	I/O Slots	Memory/Cache	Order Number
Model 1	Tru64 UNIX	1250 MHz	6 PCI, 1 AGP 4X	1 GB/16 MB	DA-66EBA-BA
Model 1	Tru64 UNIX	1250 MHz	6 PCI, 1 AGP 4X	2 GB/16 MB	DA-66EBA-CA
Model 1	Tru64 UNIX	1250 MHz	6 PCI, 1 AGP 4X	4 GB/16 MB	DA-66EBA-DA
Model 1	OpenVMS	1250 MHz	6 PCI, 1 AGP 4X	1 GB/16 MB	DY-66EBA-BA
Model 1	OpenVMS	1250 MHz	6 PCI, 1 AGP 4X	2 GB/16 MB	DY-66EBA-CA
Model 1	OpenVMS	1250 MHz	6 PCI, 1 AGP 4X	4 GB/16 MB	DY-66EBA-DA
Model 2	Tru64 UNIX	1250 MHz	10 PCI	1 GB/16 MB	DA-68EBA-BA
Model 2	Tru64 UNIX	1250 MHz	10 PCI	2 GB/16 MB	DA-68EBA-CA
Model 2	Tru64 UNIX	1250 MHz	10 PCI	4 GB/16 MB	DA-68EBA-DA
Model 2	OpenVMS	1250 MHz	10 PCI	1 GB/16 MB	DY-68EBA-BA
Model 2	OpenVMS	1250 MHz	10 PCI	2 GB/16 MB	DY-68EBA-CA
Model 2	OpenVMS	1250 MHz	10 PCI	4 GB/16 MB	DY-68EBA-DA
Model 3	Tru64 UNIX	1250 MHz	10 PCI	1 GB/16 MB	DA-67EBA-BA
Model 3	Tru64 UNIX	1250 MHz	10 PCI	2 GB/16 MB	DA-67EBA-CA
Model 3	Tru64 UNIX	1250 MHz	10 PCI	4 GB/16 MB	DA-67EBA-DA
Model 3	OpenVMS	1250 MHz	10 PCI	1 GB/16 MB	DY-67EBA-BA
Model 3	OpenVMS	1250 MHz	10 PCI	2 GB/16 MB	DY-67EBA-CA
Model 3	OpenVMS	1250 MHz	10 PCI	4 GB/16 MB	DY-67EBA-DA

Step 2 – Additional CPU Modules – Optional

- One CPU included, three additional CPUs are supported

SMP upgrade, includes one 68/1000-MHz CPU with 8-MB cache and Tru64 UNIX SMP license	KN610-DB
SMP upgrade, includes one 68/1000-MHz CPU with 8-MB cache and OpenVMS SMP license	KN610-DC
SMP upgrade, includes one 68/1250-MHz CPU with 16-MB cache and Tru64 UNIX SMP license	KN610-EB
SMP upgrade, includes one 68/1250-MHz CPU with 16-MB cache and OpenVMS SMP license	KN610-EC

NOTE: Minimum firmware for 1.25-GHz systems is V6.2-8, minimum SROM firmware is V2.22-F. Firmware files are available at: http://ftp.digital.com/pub/Digital/Alpha/firmware/interim/es45/v6.2C/

NOTE: Existing AlphaServer ES45 1-GHz Model 2 (xx-68DAA-xx) customers who upgrade to 1.25-GHz CPUs, should continue to follow Model 2 configuration guidelines. The following options are required: H7906-A9 power supply and MS620-AA, MS620-BA, and MS620-CA memory options. Do not order 3X-H7514-AA power supplies or MS5620-DB memory options.

Step 3 – Memory – Optional

- Systems include one memory option
- Maximum four memory options (total of 16 DIMMs) for Model 1B or Model 1 (one per array)
- Maximum eight memory options (total of 32 DIMMs) for Models 2B or Model 2, and Model 3B or Model 3 (two per array)
- AlphaServer ES45 system includes two memory buses
- AlphaServer ES45 system includes two arrays per bus
- For Model 2B or Model 2 and Model 3B or Model 3, memory options within an array must be identical

512-MB memory option (4 x 128-MB DIMMs)	MS620-AA
1-GB memory option (4 x 256-MB DIMMs)	MS620-BA
2-GB memory option (4 x 512-MB DIMMs)	MS620-CA
4-GB memory option (4 x 1024-MB DIMMs) **NOTE**: Do not order MS620-DB memory option for installation in ES45 1-GHz Model 2 (xx-68DAA-xx) system. MS620-DB memory option can only be installed in (xx-6xDBA-xx) and (xx-6xEBA-xx) systems.	MS620-DB

Memory performance considerations:

- The AlphaServer ES45 system has two memory buses. When two or more memory options are installed, both buses are utilized, enhancing system performance
- The AlphaServer ES45 system has two arrays per bus. Interleaved operations reduce the average latency and increase the memory throughput. When all four arrays are populated with the same amount of memory, read-write operations are four-way interleaved, enhancing system performance.

The following examples illustrate different ways of configuring a 4-GB system. Case C yields the best performance and is the recommended method for configuring memory on an AlphaServer ES45 system.

Base System (one memory option included)	**Add-on Memory Options**	**Total Memory**	**Total DIMMs**	**Performance**
Case A - DA-68DBA-DA(MS620-DB)	None	4-GB	4	Good
Case B - DA-68DBA-CA (MS620-CA)	MS620-CA	4-GB	8	Better
Case C - DA-68DBA-BA (MS620-BA)	MS620-BA + MS620-BA + MS620-BA	4-GB	16	Best *

NOTE: * = Operating system and application dependent. Up to an 18% performance enhancement has been measured in Case C over Case A.

Options

Step 4 – Additional Power Supply – Optional

One Power Supply	Standard with Model 1B or 1, 2B or 2, and 3B or 3 systems; provides system support for: • Two CPUs • One disk drive cage (up to six disk drives) • Four memory options (up to 16 DIMMs)
Two Power Supplies	Optional – Provides system support for: • Four CPUs • Two disk drive cages (up to 12 disk drives) • Eight memory Options (up to 32 DIMMs)
Third Power Supply	Optional – Provides (N+1) power redundancy system support for two power supply configuration

- Additional power supply ordered with a tower system requires an additional country-specific power cord
- Pedestal system and Rack kit include three internal IEC/IEC power cords regardless of the number of power supplies ordered

ES45 1080 W power supply; order for Models 1B, 2B, and 3B (1-GHz) and Models 1, 2, and 3 (1.25-GHz) systems only; do not order for Model 2 (xx-68DAA-xx) systems.	3X-H7514-AA
ES45 720 W power supply; order for Model 2 (1-GHz xx-68DAA-xx) systems only	H7906-A9

Step 5 – Disk Drive Cage, Universal Drive Shelf, or Universal Disk Drive – Mandatory

- Each system supports up to two disk drive cages
- Each disk drive cage supports six 1-inch universal disk drives
- 43xx StorageWorks shelves support up to 14 universal disk drives
- Pedestal enclosure supports one system and two disk drive cages, two Universal 43xx StorageWorks shelves
- M-Series cabinets supports up to five systems or one system with up to ten StorageWorks shelves

Step 5a – Disk Drive Cage – Requires selection of system disk drive

Disk drive cage with storage cable accommodates up to six internal 1-inch Universal disk drives – Requires mandatory selection of a Storage Adapter in the system. Requires an internal Ultra2 SCSI or Ultra3 SCSI channel per disk drive cage. Maximum of two storage cages in system.	BA610-6D

NOTE: See ES45 Configuration Chart for Storage Adapters in Step 10.

Universal Disk Drives *(Supported in Disk Drive Cage and Universal StorageWorks Shelves)*	18.2-GB Ultra3 SCSI 10,000 rpm 1-inch Universal disk drive	3R-A0585-AA
	18.2-GB Ultra3 SCSI 15,000 rpm 1-inch Universal disk drive	3R-A1543-AA
	36.4-GB Ultra3 SCSI 10,000 rpm 1-inch Universal disk drive	3R-A0919-AA
	36.4-GB Ultra3 SCSI 15,000 rpm 1-inch Universal disk drive	3R-A3079-AA
	72.8-GB Ultra3 SCSI 10,000 rpm 1-inch Universal disk drive	3R-A3050-AA

Step 5b – StorageWorks Model 4314R and Model 4354R Universal Drive Shelves

- Up to two shelves in Pedestal form factor
- See Step 7 for rack configurations with M-Series cabinets
- StorageWorks Model 4314R, 4314T and 4354R Ultra3 SCSI (LVD) single-bus and split-bus Universal drive shelves; refer to StorageWorks Enclosure 4300 Family QuickSpecs when configuring shelves. When selecting a DS-SL13R-xx split-bus shelf, two SCSI channels are required from selected storage adapters. BN38C-05 cable is required per channel if the connection is not VHDCI/VHDCI. DS-SL13R shelves include one 12-foot VHDCI/VHDCI SCSI cable.

StorageWorks Model 4314R Ultra3 SCSI (LVD) single-bus Universal drive rackmount shelf, includes one power supply, U.S. – no support for Model 4314R single-bus shelves with 3X-KZPEA-DB adapter (190209-001)	DS-SL13R-AA (All regions except Japan)
StorageWorks Model 4314R Ultra3 SCSI (LVD) single-bus Universal drive rackmount shelf, includes one power supply, Japan – no support for Model 4314R single-bus shelves with 3X-KZPEA-DB adapter	190209-291 (U.S./Canada orders for Japan variant)
	DS-SL13R-AJ (Other country orders)
StorageWorks Model 4354R Ultra3 SCSI (LVD) split-bus Universal drive rackmount shelf, includes two redundant power supplies, U.S. (190211-001)	DS-SL13R-BA (All regions except Japan)

Step 5 – Disk Drive Cage, Universal Drive Shelf, or Universal Disk Drive – Mandatory *(continued)*

Step 5b – StorageWorks Model 4314R and Model 4354R Universal Drive Shelves *(continued)*

	StorageWorks Model 4354R Ultra3 SCSI (LVD) split-bus Universal drive rackmount shelf, includes two redundant power supplies, Japan	190211-291 (U.S./Canada orders for Japan variant) DS-SL13R-BJ (Non U.S./Canada orders for Japan variant)
	To add additional power supply for single-bus universal shelf, U.S.	212980-B21 (U.S./Canada orders) DS-SE2UP-AA (Other country orders)
	To add additional power supply for single-bus universal shelf, International	119826-B31 (U.S./Canada orders) DS-SE2UP-AI (Other country orders)
StorageWorks Model 4314T Standalone Enclosures	Model 4314T Ultra3 SCSI, Single-bus Tower Enclosure, U.S.	190210-001 (U.S./Canada orders) DS-SL13T-AA (Other country orders)
	Model 4314T Ultra3 SCSI, Single-bus Tower Enclosure, International	(190210-B31 (U.S./Canada orders) DS-SL13T-AB (Other country orders)
	Model 4314T Ultra3 SCSI, Single-bus Tower Enclosure, Japan	190210-291 (U.S./Canada orders) DS-SL13T-AJ (Other country orders)

Step 6 – System Enclosures – Mandatory selection of Tower, Pedestal, Rack Kit, Power Cords

- All AlphaServer ES45 enclosures are carbon black
- Power cords are mandatory for tower and pedestal enclosures
- Power cords are included in Rack Kits

Step 6a – Tower Enclosure

- Tower enclosure supports one system
- Selection of one country-specific power cord is mandatory
- Additional power cord is mandatory if additional power supply is ordered.

200–240 V Tower Enclosure	BA61M-CT

Step 6b – Pedestal Enclosure

- Pedestal enclosure supports one system, and up to two Universal 43xx StorageWorks shelves.
- Selection of two country-specific power cords is mandatory for all systems.

200–240 V Pedestal Enclosure	BA61P-CB

Step 6c – Rack Kit for M-Series Cabinet

- Rack Kit required for each AlphaServer ES45 system installed in an M-Series Cabinet
- Rack Kit supports one system

Rack kit for AlphaServer ES45, includes dress bezel, slides, three internal IEC/IEC power cords, all brackets and hardware for mounting in M-Series cabinets, 200-240 V	BA61R-CR

Step 6 – System Enclosures – Mandatory selection of Tower, Pedestal, Rack Kit, Power Cords *(continued)*

Step 6d – Power Cords

North American 200 to 240 V, 75-inch – Tower	BN18J-1K
North American 200 to 240 V, 108-inch – Pedestal	3X-BN64A-1C
Australia, New Zealand, 2.5-metre	103541-011 (U.S./Canada orders) BN19H-2E (Other country orders)
Central Europe, 2.5-metre	BN19C-2E
Denmark, 2.5-metre	103541-481 (U.S./Canada orders) BN19K-2E (Other country orders)
Egypt, India, South Africa, 2.5-metre	103541-AR1 (U.S./Canada orders) BN19S-2E (Other country orders)
Israel, 2.5-metre	BN18L-2E
Italy, 2.5-metre	103541-461 (U.S./Canada orders) BN35M-02 (Other country orders)
Japan, 2.5-metre, Dentori approved	3X-BN46F-02
Switzerland, 2.5-metre	103541-511 (U.S./Canada orders) BN19E-2E (Other country orders)
UK, Ireland, 2.5-metre	BN19A-2E

Step 7 – M-Series Cabinets

- M-Series Cabinet enclosures support up to five systems, or one system with up to ten StorageWorks shelves.
- M-Series Cabinets require mandatory selection of the following items:
  - Rear cabinet extender based on cabinet height
  - Cabinet front door or trim kit based on cabinet height
  - Second power distribution unit (PDU) – M-Series Cabinets include one H7602 PDU
  - Factory integration
  - Ballast kit, if only one system is ordered for the H9A15 cabinet

NOTE: For additional configurations beyond those listed in the following charts, contact CustomSystems.

Cabinet Configuration Chart for AlphaServer ES45 (8U) with 43xx Series StorageWorks Shelves (3U) – Supports high-density configurations

Cabinet (b)	**Front Door or Trim Kit**	**Cabinet Depth Extender**	**Power Distribution Unit**	**ES45 Systems**	**43xx Storage Shelves**	**Unused U Spaces**
H9A10-ME/-MF (34U)	H9C10-ZF or H9C10-ZT	H9C10-ZE	With second H7600	1	8	1
				2	5	2
				3	3	0
				4	0	1
H9A15-ME/-MF (41U)	H9C15-ZF or H9C15-ZT	H9C15-ZE	With second H7600	1 (a)	10	2
				2	8	0
				3	3	7
				4	0	8
			(b) With second H7602	3	3 or 5	1
				4	0 or 2	2
				5	0	0

NOTES:

a. Installation of only one AlphaServer ES45 system in an H9A15 cabinet requires the mandatory selection of a ballast kit.

b. H9A1x-ME includes one H7602-EB PDU; H9A1x-MF includes one H7602-DB PDU – Order second PDU.
- Single Input - H7600-DB/EB, 240 V
- Dual Input - H7602-DB/EB, 240 V

Options

Step 7 – M-Series Cabinets *(continued)*

M-Series Cabinets – Specify cabinet selection	67-inch carbon black cabinet with 59.5-inch or 34U of usable vertical space, 200-240 V dual-16A PDU, 16 IEC C13 outlets, two input power plug NEMA L620P, Americas, Asia Pacific; includes rear door.	H9A10-ME
	67-inch carbon black cabinet with 59.5-inch or 34U of usable vertical space, 240 V dual-16A PDU, 16 IEC C13 outlets, two input power plug IEC 309, 20A, Europe; includes rear door.	H9A10-MF
	79-inch carbon black cabinet with 71.7-inch or 41U of usable vertical space, 200-240 V dual-16A PDU, 16 IEC C13 outlets, two input power plug NEMA L620P, Americas, Asia Pacific; includes rear door.	H9A15-ME
	79-inch carbon black cabinet with 71.7-inch or 41U of usable vertical space, 240 V dual-16A PDU, 16 IEC C13 outlets, two input power plug IEC 309, 20A, Europe; includes rear door.	H9A15-MF
Rear Cabinet Extender – Mandatory based on cabinet height	Rear cabinet extender for carbon black H9A10 cabinets	H9C10-ZE
	Rear cabinet extender for carbon black H9A15 cabinets	H9C15-ZE
Front Cabinet Treatment – Mandatory based on cabinet height	Front door for carbon black H9A10 cabinet enclosure	H9C10-ZF
	Front trim kit for carbon black H9A10 cabinet enclosure	H9C10-ZT
	Front door for carbon black H9A15 cabinet enclosure	H9C15-ZF
	Front trim kit for carbon black H9A15 cabinet enclosure	H9C15-ZT
Factory Integration – Mandatory	Factory Integration of systems and storage devices assembled and configured in cabinet enclosure in predefined locations	YS-ASCAA-AA
Ballast Kit – Mandatory if only one ES45 system drawer is ordered for the H9A15 cabinet	• Ballast is added to a cabinet at particular locations for specific configurations to meet safety regulations for installation, operation, and service; see Cabinet Configuration Charts.	
	Two 35–40 lb (16–18 kg) steel plates	H9C10-MC
Power Distribution Unit – Mandatory	240 V single 20A input power plug IEC 309, 12 IEC C13 outlets	H7600-DB
	200–240 V single 20A input power plug NEMA L620P, with 12 IEC C13 outlets, North America/Canada/Japan	H7600-EB
	240 V dual 16A input power plugs IEC 309, with 16 IEC C13 outlets	H7602-DB
	200–240 V dual 16A input power plugs NEMA L620P, with 16 IEC C13 outlets, NA/Canada/Japan	H7602-EB
Storage Shelves Supported in M-Series Cabinets – Optional	For supported StorageWorks shelves, see Step 5b.	

Step 8 – Networking Adapters/Controllers – Mandatory Ethernet Adapter

Step 8a – Networking Adapters/Controllers – Mandatory

- Select mandatory Ethernet adapter
- Adapters require a minimum of Tru64 UNIX V5.1A or OpenVMS V7.3
- Each adapter uses one PCI slot

		Maximum # Supported				
		Tru64 UNIX	OpenVMS	PCI Slot		
Ethernet 10/100/1000	PCI (32/64-bit, 33-MHz to 66-MHz) dual-port 10/100 Ethernet (UTP/RJ45s) NIC and Base Module. (One 3X-DE602-TA or 3X-DE602-FA optional add-on daughter card can be combined with this module.) **NOTE**: Use BN25G, BN26M, BN24Q, or BN28Q twisted pair RJ45 cables.	4	4	3.3/5 V	66 MHz	3X-DE602-BB
	PCI (32/64-bit, 33-MHz to 66-MHz) single-port 10/100/1000 Ethernet (UTP/RJ45) Gigabit NIC, copper; no on-board Boot-ROM support. **NOTE**: Adapter is qualified to operate only in PCI slots 1, 2, 3, 4, 5, 6, 9, 10. Use BN25G, BN26M, BN24Q, or BN28Q twisted pair RJ45 cables.	4	4	3.3/5 V	66 MHz	DEGPA-TA
	PCI (32/64-bit, 33-MHz to 66-MHz) single-port 1000 Mbps (MMF/SC) NIC; no on-board Boot-ROM support. **NOTE**: Adapter is qualified to operate only in PCI slots 1, 2, or 3. Use BN34A or BN34B cables.	3	3	3.3/5 V	66 MHz	DEGPA-SA

Step 8b – Networking Adapters/Controllers – Optional

Ethernet 10/100	Dual-port 10/100 Ethernet (UTP/RJ45) add-on daughter card for use with the 3X-DE602-BB only. The combined 3X-DE602-BB and 3X-DE602-TA modules provide four 10/100 (UTP/RJ45s) ports in a single PCI slot option; allows for a maximum of 16 ports per system. **NOTE**: 3X-DE602-TA **cannot** be used standalone. OpenVMS V7.3 requires Tima Kit: DEC-AXPVMS-VMS73_LAN-V0100—4.PCSI Use BN25G, BN26M, BN24Q, or BN28Q twisted pair RJ45 cables.	4	4	3.3/5 V	33 MHz	3X-DE602-TA
FDDI	Single-port 100 Mbps (MMF/duplex-SC) add-on daughter card for use with the 3X-DE602-BB. The combined 3X-DE602-BB and 3X-DE602-FA provides two 10/100 (UTP/RJ45s) and one 100Mbps (MMF/SC) ports in a single PCI slot option. **NOTE**: 3X-DE602-FA **cannot** be used standalone. Use BN34A or BN34B cables.	4	4	3.3/5 V	33 MHz	3X-DE602-FA
	PCI (32-bit, 33-MHz) to FDDI SAS (MMF/duplex-SC) NIC Use BN34A, BN34B, or BN34D cables.	4	4	3.3/5 V	33 MHz	3X-DEFPA-AC
	PCI (32- bit, 33-MHz) to FDDI DAS (MMF/duplex-SC) NIC Use BN34A, BN34B, or BN34D cables.	4	4	3.3/5 V	33 MHz	3X-DEFPA-DC
	PCI (32-bit, 33-MHz) to FDDI DAS (UTP/RJ45) NIC Use BN25G, BN26M, BN24Q, or BN28Q twisted pair RJ45 cables.	4	4	3.3/5 V	33 MHz	3X-DEFPA-MC
	PCI (32-bit, 33-MHz) to FDDI SAS (UTP/RJ45) NIC Use BN25G, BN26M, BN24Q, or BN28Q twisted pair RJ45 cables.	4	4	3.3/5 V	33 MHz	3X-DEFPA-UC
FDDI-specific Cables	Multimode fibre optic (MMF) 62.5/125um duplex cable with SC-to-MIC connectors xx = available lengths: (01, 03, and 10) for 1, 3, and 10 metres					BN34D-xx
ATM	PCI (32-bit, 33-MHz) to 155 Mbps ATM, Copper NIC with RJ45 connector Use BN25G-xx, or BN26M-xx cables.	6	6	3.3/5 V	33 MHz	3X-DAPBA-UA
	PCI (32-bit, 33-MHz) to 155 Mbps ATM Fibre NIC with SC connector Use BN34B-xx cable.	6	6	3.3/5 V	33 MHz	3X-DAPBA-FA
	PCI (32- bit, 33-MHz) to 622 Mbps ATM Fibre NIC with SC connector Use BN34B-xx cable.	4	-	3.3/5 V	33 MHz	3X-DAPCA-FA
Synchronous Communications	PCI (32-bit, 33-MHz) to Dual-Port Intelligent Synchronous Communications NIC -- Requires at least one (maximum two) BN34x sync cable listed below	4	4	3.3/5 V	33 MHz	3X-PBXDD-AA
	PCI (32-bit, 33-MHz) to Quad-Port Intelligent Synchronous Communications NIC -- Requires at least one (maximum four) BN34x sync cable listed below.	4	4	3.3/5 V	33 MHz	3X-PBXDD-AB

Step 8 – Networking Adapters/Controllers – Mandatory Ethernet Adapter *(continued)*

Step 8b – Networking Adapters/Controllers -- Optional *(continued)*

		Maximum # Supported				
		Tru64 UNIX	OpenVMS	PCI Slot		
Synchronous-specific Cables	EIA-530 Single-port cable					BC34G-06
	V.24/EIA-232 Single-port cable					BC34L-06
	V.11/x.21 Single-port cable					BC33S-06
	V.35 Single-port cable					BC34T-06
Asynchronous Communications	PCI (32-bit, 33-MHz) to 4-port Async Communications NIC with DB-25 octopus cable	2	2	3.3/5 V	33 MHz	PBXDA-BA
	PCI (32-bit, 33-MHz) to 8-port Async Communications NIC with DB-25 octopus cables	2	2	3.3/5 V	33 MHz	PBXDA-BB
	PCI (32-bit, 33-MHz 5.0 Volt Bus-Signaling only) to 4-port Async Communications NIC with DB-25 octopus cable	2	2	3.3/5 V	33 MHz	PBXDA-AA
	PCI (32-bit, 33-MHz 5.0 Volt Bus-Signaling only) to 8-port Async Communications NIC with DB-25 octopus cables	2	2	3.3/5 V	33 MHz	PBXDA-AB
	PCI (32-bit, 33-MHz) to 16-port Async Communications Controller and rackmount 16-port distribution box with RJ45 connectors.	2	2	3.3/5 V	33 MHz	PBXDA-AC
Asynchronous Connector Adapters	RJ45-to-DB-25 Converter Cable					CXI01-AC
	RJ45-to-DEC MJ11 Converter Cable (8 pack)					CXI01-AF

Step 8c – Multi-use Cables

Ethernet, FDDI, ATM	Multimode fibre optic (MMF) 62.5/125um duplex cable, with SC-to-ST connectors. xx = available lengths: (2E, 4E, 01, 03, 10, 20, 30) for 2.4, 4.5, 1, 3, 10, 20, and 30 metres					BN34A-xx
	Multimode fibre optic (MMF) 62.5/125um duplex cable, with SC-to-SC connectors. xx = available lengths: (2E, 4E, 01, 03, 10, 20, 30) for 2.4, 4.5, 1, 3, 10, 20, and 30 metres					BN34B-xx
	Category 5e (4-Unshielded Twisted Pairs / UTP) straight-through cable with RJ45-to-RJ45 connectors for system to switch, repeater, or hub connectivity. xx = available lengths: (0B, 0E, 01, 03, 04, 07) for 0.2, 0.5, 1, 3, 4, and 7 metres					BN25G-xx
	Category 5e (4-Twisted Pairs, Screened/ ScTP) straight-through cable with RJ45-to-RJ45 connectors for system to switch, repeater, or hub connectivity. xx = available lengths: (0E, 01, 03, 04, 07) for 0.5, 1, 3, 4, and 7 metres					BN26M-xx
	Category 5e (4-Unshielded Twisted Pairs / UTP) Xover cable with RJ45-to-RJ45 connectors for system to switch, repeater, or hub connectivity. xx = available lengths: (0E, 01, 03, 04, 07) for 0.5, 1, 3, 4, and 7 metres					BN24Q-xx
	Category 5e (4-Twisted Pairs, Screened / ScTP) Xover cable with RJ45-to-RJ45 connectors for system to switch, repeater, or hub connectivity. xx = available lengths: (0E, 01, 03, 04, 07) for 0.5, 1, 3, 4, and 7 metres					BN28Q-xx

Step 9 – MEMORY CHANNEL – Optional

Configuring Information

- Up to two PCI-to-System Area Network adapters (CCMAB-AA) are supported in a single system.
- For two to eight system nodes, order one CCMHB-AA hub; order one CCMAB-AA adapter and one BN39B-04 or BN39B-10 cable for each system node; make connections from the CCMAB-AA in each system to the CCMHB
- CCMHB-AA includes four CCMLB-AA line cards and supports up to four nodes; expansion up to eight system nodes can be achieved by adding up to four CCMLB-AA line cards.
- If two CCMAB-AAs are configured in each system, a second CCMHB-AA is required.
- If nodes must be separated by a distance longer than standard copper cables allow the CCMFB option converts the output of the standard CCMAB controller or CCMLB line card to single-mode fibre optic cable. The fibre optic connection may be up to 2,000 metres long between two CCMAB controllers connected in virtual hub mode, or 3,000 metres between a CCMAB controller and a CCMHB hub. (The connection from the CCMHB hub to a second system may also be 3,000 metres.) The CCMFB option requires a second PCI slot in the system from which it draws power only. It is normally connected to the corresponding CCMAB controller with the short BN39B-01 cable. The CCMFB is also used in the CCMHB hub where it occupies a slot normally used by the CCMLB line card, limiting expansion to four radial fibre optic connections.
- CCMHB-BA hub expansion box provides additional slots for up to eight fibre optic connections. Two standard length single-mode fibre optic cables are available (BN34R-10 and BN34R-31); however, users normally provide this fibre optic connection. Fibre optic connectivity is completely transparent to the systems using it and has no performance impact.

NOTE: When configuring Model 1B or Model 1, Model 2B or Model 2 with two Memory Channel Controllers (CCMAB-AA) installed in hose 0 only, all nodes in a Memory Channel cluster must have the window size jumper set to the same size, specifically 128. When configuring Model 3B or Model 3 with two Memory Channel Controllers (CCMAB-AA), all nodes in a Memory Channel cluster must have the window size jumper set to the same size, specifically 512 or 128; Memory Channel Hub must be installed on a different hose (hose 0, 1, or 2). Refer to the TruCluster QuickSpecs for Memory Channel details.

Model 1B (1 GHz) Model 1 (1.25 GHz)	Model 2B (1 GHz) Model 2 (1.25 GHz)	Model 3B (1 GHz) Model 3 (1.25 GHz)
128K I/O	128K I/O	512K or 128K I/O
Use for new or existing clusters; if existing cluster at 512K, shut down and configure all nodes to 128K	Use for new or existing clusters; if existing cluster at 512K, shut down and configure all nodes to 128K	Online add-on to existing 512K configured clusters, OR, use for existing clusters at 128K. If existing cluster at 512K, shut down and configure all nodes to 128K
Supports dual-rail, (two) Memory Channel controllers on single PCI Bus 0	Supports dual-rail, (two) Memory Channel controllers on single PCI Bus 0	Supports dual-rail, (two) Memory Channel controllers on separate PCI Bus (0, 1, or 2)

MEMORY CHANNEL Controller/ System Area Network Hub

PCI-to-System Area Network Controller, maximum two – 5V/33 MHz	CCMAB-AA
System Area Network Hub with four line cards; includes BN19P-2E power cord for Canada, Japan, and U.S. –for other regions, order appropriate power cord from the following list:	CCMHB-AA
Hub expansion box with no line cards	CCMHB-BA
Expansion line card for CCMHB hub	CCMLB-AA
1-metre cable for CCMAB and CCMHB	BN39B-01
4-metre cable for CCMAB and CCMHB	BN39B-04
10-metre cable for CCMAB and CCMHB	BN39B-10
Copper-to-single mode fibre optic converter - 5V (clock not affected)	CCMFB-AA
Rackmount kit (3U) for CCMHB (Memory Channel Hub II); required for mounting in H9A1x cabinets.	3X-BA61R-MC
Power cord for rackmount CCMHB hub	BN35S-02

Step 9 – MEMORY CHANNEL – Optional (*continued*)

MEMORY CHANNEL Power Cords	Australia, New Zealand	103541-011 (U.S./Canada orders)
		BN19H-2E (Other country orders)
	Central Europe	BN19C-2E
	Denmark	103541-481 (U.S./Canada orders)
		BN19K-2E (Other country orders)
	Egypt, India	103541-AR1 (U.S./Canada orders)
		BN19S-2E (Other country orders)
	Ireland, United Kingdom	BN19A-2E
	Israel	BN18L-2E
	Italy	103541-461 (U.S./Canada orders)
		BN35M-02 (Other country orders)
	Japan, 2.5-metre, Dentori approved	3X-BN46F-02
		BN19M-2E (Other country orders)
	Switzerland	103541-511 (U.S./Canada orders)
		BN19E-2E (Other country orders)

NOTE: When using MEMORY CHANNEL, refer to the TruCluster QuickSpecs for configuration guidelines and restrictions: http://www.compaq.com/products/quickspecs/Division/10657.html
The MEMORY CHANNEL controller, CCMAB-AA, must be revision C1 or later.

NOTE: This website is available in English only.

Tru64 UNIX Systems (V5.1A)	• Each system node in the cluster requires a TruCluster software license (QL-6BRAE-AA) or TruCluster Plus Software Package (QP-6R9AE-AA)
OpenVMS Systems	• OpenVMS V7.3 and OpenVMS Cluster license (QL-MUZAE-AA) are required

Step 10 – Storage Adapters/Controllers – Mandatory

NOTE: Refer to the following chart when configuring adapters, shelves, and disks.

AlphaServer ES45 Configuration Chart for Storage Adapters

Storage Adapter		Shelf	Disk Drive	Tru64 UNIX	OpenVMS
3X-KZPCA-AA		BA610-6D DS-SL13R-xx	3R-A0xxx-AA 1-inch Universal 3R-A1xxx-AA 1-inch Universal 3R-A3xxx-AA 1-inch Universal	V5.1A	V7.3
3.3/5 V	33 MHz				
3X-KZPEA-DB		BA610-6D DS-SL13R-Bx	3R-A0xxx-AA 1-inch Universal 3R-A1xxx-AA 1-inch Universal 3R-A3xxx-AA 1-inch Universal	V5.1A	V7.3
3.3/5 V	66 MHz				
3X-KZPBA-CC		External HSZ80	DS-RZ1xx-VW	V5.1A	V7.3
3.3/5 V	33 MHz				
DS-KGPSA-DA		External HSG80	3R-A0xxx-AA 1-inch Universal 3R-A1xxx-AA 1-inch Universal 3R-A3xxx-AA 1-inch Universal	V5.1A	
3.3/5 V	66 MHz				
RAID Controller					
DS-KZPCC-AC/CE		BA610-6D DS-SL13R-xx	3R-A0xxx-AA 1-inch Universal 3R-A1xxx-AA 1-inch Universal 3R-A3xxx-AA 1-inch Universal	V5.1A	

	Maximum # Supported				
	Tru64 UNIX	**OpenVMS**	**PCI Slot**		
PCI to 2-Gb Fibre Channel adapter, 64-bit/66-MHz, single-channel **NOTE**: When used in a switched standalone or TruCluster environment (with Fibre Channel Switches – see Step 11), a maximum of six adapters is supported. Arbitrated loop is not supported. Tru64 UNIX V 5.1A requires Patch Kit: T64V51AB01AS0001-20020116.tar.	See Note	See Note	3.3/5 V	66 MHz	DS-KGPSA-DA (261329-B21)
See Step 11 for Fibre Channel cables					
PCI 1-port Ultra2 (LVD) SCSI adapter, 32-bit/33-MHz, single-channel (uses one PCI slot); includes internal 68-pin and external 68-pin HD connectors; order BN38C-xx cable to connect adapter to Ultra3 shelf, or order VHDCI converter (BN38E-0B) for use with included cable; HSZxx RAID controllers not supported. No support for shared SCSI.	6	6	3.3/5 V	33 MHz	3X-KZPCA-AA
PCI 2-port Ultra3 (LVD2) SCSI adapter, 64-bit/66-MHz dual-channel (uses one PCI slot); includes internal 68-pin and external 68-pin VHDCI connectors; requires 3X-BC56J-xx cable to connect adapter to DS-SL13R-Bx shelf; HSZxx RAID controllers not supported. No shared SCSI **or** SDLT tape support. No support for Model 4314R single-bus shelves with 3X-KZPEA-DB adapter. Tru64 UNIX requires graphics adapter to run console utilities (RUN BIOS).	6	6	3.3/5 V	66 MHz	3X-KZPEA-DB
U160 cable, VHDCI to VHDCI (341174-B21 – 6-feet, 341175-B21 – 12-feet, 164604-B21 – 24-feet) xx = 02 (6-feet), 03 (12-feet), 04 (24-feet)					3X-BC56J-xx

Step 10 – Storage Adapters/Controllers – Mandatory *(continued)*

	Maximum # Supported				
	Tru64 UNIX	OpenVMS	PCI Slot		
PCI 3-port PCI to Ultra2, 64-bit, LVD backplane RAID controller with 64-MB cache (uses one PCI slot); requires connection to BA610-6D disk card cage or DS-SL13R-xx Universal StorageWorks shelf; requires graphics adapter to run console utilities (SMOR) or alternatively, you can run this via a serial line using a PC and terminal emulation software. **NOTE**: DS-KZPCC-xx RAID controllers require Tru64 UNIX V5.1A; TruCluster support with V5.1A requires IPK Kit: T64V51AB01AS0001-20020116.TAR.	8	-	3.3/5 V	33 MHz	DS-KZPCC-CE
PCI 1-port PCI to Ultra2, 64-bit, LVD backplane RAID controller with 16-MB cache (uses one PCI slot); requires connection to BA610-6D disk card cage or DS-SL13R-xx Universal StorageWorks shelf; requires graphics adapter to run console utilities (SMOR) or alternatively, you can run this via a serial line using a PC and terminal emulation software. **NOTE**: DS-KZPCC-xx RAID controllers require Tru64 UNIX V5.1A; TruCluster support with V5.1A requires IPK Kit: T64V51AB01AS0001-20020116.TAR.	8	-	3.3/5 V	33 MHz	DS-KZPCC-AC
PCI 1-port UltraSCSI wide differential 32-bit/33-MHz PCI adapter (uses one PCI slot); includes external 68-pin HD connector, requires BN38C-xx cable (2 to 25 metres) to connect adapter to differential UltraSCSI shelf or RAID controller	4	4	3.3/5 V	33 MHz	3X-KZPBA-CC
68-pin HD male-to-VHDCI male UltraSCSI cable; xx = 02, 03, 05, 10, 20, 25 metres					BN38C-xx
PCI CI adapter for OpenVMS systems only; requires two 5.0 V PCI slots and CI cable for each adapter	-	2	5 V	33 MHz	CIPCA-BA
CI cable					BNCIA-xx

Step 11 – Storage Devices – Optional

Step 11a -Tape Drives

- For detailed tape drive information see http://www.compaq.com/products/storageworks/sitemap.html#tapedrives

NOTE: This web site is available in English only.

AIT Tape Drives (Internal)

- System supports four internal removable devices; select up to 4 AIT devices
- System includes 1.44-MB diskette drive
- System includes 5.25-inch half-height 600-MB 40X IDE CD-ROM drive
- Removable media slots provide support for two 5.25-inch half-height devices, or one 5.25-inch full-height removable media device
- For maximum performance, tape libraries must be configured with Fast Wide Differential (FWD) controllers for tape backup

AIT 5.25-inch half-height 35/70-GB 8-mm Wide UltraSCSI tape drive, top gun blue; requires single ended UltraSCSI adapter or Ultra2 adapter (KZPBA-CA, KZPCM-DA, or 3X-KZPCA-AA) and SCSI cable (3X-BN46M-01)	3X-SZ35X-LB
AIT 5.25-inch half-height 35/70-GB 8-mm LVD UltraSCSI tape drive, carbon black; requires LVD adapter	3R-A2392-AA
AIT 5.25-inch half-height 50/100-GB 8-mm Ultra2 (LVD) SCSI tape drive, top gun blue; requires Ultra2 (LVD) adapter and SCSI cable (3X-BN46M-01)	3X-SZ50X-LB
AIT 5.25-inch half-height 50/100-GB 8-mm Ultra2 (LVD) SCSI tape drive, carbon black; requires Ultra2 (LVD) adapter and SCSI cable (3X-BN46M-01)	3R-A3753-AA 157766-B22
1-metre Ultra2 68-pin LVD cable with two connectors, multimode terminator and two wide-to-narrow adapters (for connection of 50-pin narrow devices)	3X-BN46M-01

Step 11 – Storage Devices – Optional *(continued)*

Step 11a -Tape Drives *(continued)*

AIT Tabletop Tape Drives	AIT 35/70-GB 8-mm LVD tabletop tape drive, carbon black, North America; requires LVD adapter	216885-001
	Same as above, International	216885-B31
	Same as above, Japan	216885-291
	AIT 50/100-GB 8-mm SCSI tabletop tape drive, carbon black, with 120V North American power cord; requires Ultra2 (LVD) adapter	157767-002
	Same as above, International	157767-B32
	Same as above, Japan	157767-292
AIT Hot-plug Tape Drives	AIT 35/70-GB hot plug LVD Universal tape drive, uses two slots in BA610-6Dor 43xxx shelves	3R-A2396-AA
	AIT 50/100-GB hot plug LVD Universal tape drive, uses two slots in BA610-6Dor 43xxx shelves	3R-A2779-AA
AIT Autoloaders	AIT 35-GB tabletop autoloader, 8 cartridge, U.S.	292355-001
	Same as above, International	292355-B31
	AIT 35-GB rackmount autoloader, 8 cartridge, U.S.	280349-001
	Same as above, International	280349-B31
	AIT rail kit for autoloader	284930-001
AIT Tape Libraries	SSL2020 AIT tabletop library with one AIT 50-GB drive and 20 slots, LVD	175195-B21
	SSL2020 AIT tabletop library with two AIT 50-GB drives and 20 slots, LVD	175195-B22
	SSL2020 AIT rackmount library with one AIT 50-GB drive and 20 slots, LVD	175196-B21
	SSL2020 AIT rackmount library with two AIT 50-GB tape drives and 20 slots, LVD	175196-B22
DAT Tape Drives (Internal)	• System supports four internal removable devices; select up to four DAT devices.	
	DAT 12/24-GB 4-mm 5.25-inch half-height SCSI tape drive, top gun blue; requires single-ended UltraSCSI adapter (KZPBA-CA, or KZPCM-DA) and SCSI cable (3X-BN46M-01)	TLZ10-LB
	DAT 20/40-GB 4-mm 5.25-inch half-height Ultra2 (LVD) SCSI tape drive, top gun blue; requires Ultra2 (LVD) adapter and SCSI cable (3X-BN46M-01)	3X-SD20X-LB
	DAT 20/40-GB 4-mm 5.25-inch half-height Ultra2 (LVD) SCSI tape drive, carbon black; requires Ultra2 (LVD) adapter and SCSI cable (3X-BN46M-01)	3R-A3752-AA 157769-B22
	1-metre Ultra2 68-pin LVD cable with two connectors, multimode terminator and two wide-to-narrow adapters (for connection of 50-pin narrow devices)	3X-BN46M-01
	DAT 12/24-GB 4-mm narrow single-ended tabletop SCSI tape drive in StorageWorks carrier	DS-TLZ10-DB
DAT Tabletop Tape Drives	DAT 20/40-GB 4-mm Wide Ultra2 (LVD) tabletop SCSI tape drive with 120V North American power cord, carbon black; requires Ultra2 (LVD) adapter	157770-002
	Same as above, International	157770-B32
	Same as above, Japan	157770-292
DAT Hot-plug Tape Drive	DAT 20/40-GB DDS4 hot-plug LVD Universal tape drive, uses two slots in BA610-6D or 43xxx shelves	3R-A2780-AA
DAT Autoloaders	DAT 20/40-GB auto loader external; requires BN31W-xx SCSI cable and 3X-KZPCA-AA adapter, North America	166505-001
	Same as above, International	166505-B31
	Same as above, Japan	166505-291

Step 11 – Storage Devices – Optional *(continued)*

Step 11a -Tape Drives *(continued)*

SDLT Tape Drives (Internal)	• System supports four internal removable devices; select up to two SDLT devices.	
	SDLT 110/220-GB 3U/5U tape drive, requires 3X-KZPCA-AA LVD adapter	192106-B25
	SDLT 160/320-GB 3U/5U tape drive, requires 3X-KZPCA-AA LVD adapter, carbon black	257319-B21
DLT/SDLT Tabletop Tape Drives	DLT8000 tabletop 40/80-GB DLT external tape drive, carbon black – requires 3X-KZPCA-AA LVD adapter – U.S.	146197-B23
	Same as above – Japan	146197-292
	SDLT tabletop 110/220-GB external tape drive, carbon black – requires 3X-KZPCA-AA LVD adapter; TruCluster support restricted to non-shared buses only – U.S.	192103-002
	Same as above – International	192103-B32
	Same as above – Japan	192103-292
	SDLT tabletop 160/320-GB external tape drive, carbon black – requires 3X-KZPCA-AA, U.S.	257319-001
	Same as above, International	257319-B31
	Same as above, Japan	257319-291
	Rackmount kit for H9Axx M-Series cabinets – required for mounting MSL5000 series in M-Series cabinets	254795-001
	MSL5026DLX, DLT tabletop library with one 40/80-GB DLT tape drive, LVD	231821-B21
	MSL5026DLX, DLT tabletop library with two 40/80-GB DLT tape drives, LVD	231821-B22
	MSL5026DLX or MSL5026SL, DLT/SDLT rackmount library, 0 drives; requires rackmount kit (254795-001)	231979-B21
	MSL5026DLX, DLT rackmount library with one 40/80-GB DLT tape drive, LVD; requires rackmount kit (254795-001)	231891-B21
	MSL5026DLX, DLT rackmount library with two 40/80-GB DLT tape drives, LVD; requires rackmount kit (254795-001)	231891-B22
	MSL5026SL, SDLT tabletop library with one 110/220-GB SDLT tape drive, LVD	231822-B21
	MSL5026SL, SDLT tabletop library with two 110/220-GB SDLT tape drives, LVD	231822-B22
	MSL5026SL, SDLT rackmount library with one 110/220-GB SDLT tape drive, LVD; requires rackmount kit (254795-001)	231892-B21
	MSL5026SL, SDLT rackmount library with two 110/220-GB SDLT tape drives, LVD; requires rackmount kit (254795-001)	231892-B22
	MSL5052SL SDLT tabletop library with two 110/220-GB drives, LVD	249490-B21
	MSL5052SL SDLT rackmount library, 0 drives, LVD – requires rackmount kit (254795-001)	255102-B21
	MSL5052SL SDLT rackmount library with two 110/220-GB drives, LVD – requires rackmount kit (254795-001)	249491-B21
	MSL5052SL SDLT 110/220-GB drive field upgrade, LVD	231823-B22

Step 11 – Storage Devices – Optional *(continued)*

Step 11a -Tape Drives *(continued)*

DLT/SDLT Tape Libraries	ESL9198SL SDLT tape library with four 110/220-GB SDLT tape drives, 198 slots – requires 3X-KZPCA-AA adapter	234618-B21
	ESL9198SL SDLT tape library with eight 110/220-GB SDLT tape drives, 198 slots – requires 3X-KZPCA-AA adapter	234618-B22
	ESL9595SL SDLT tape library, 0 drives, 400 slots – requires 3X-KZPCA-AA adapter	274672-B21
	ESL9595SL SDLT tape library, 2 drives, 400 slots – requires 3X-KZPCA-AA adapter	274672-B22
	ESL9595SL SDLT tape library, 16 drives, 400 slots – requires 3X-KZPCA-AA adapter	274672-B28
	ESL9595SL SDLT tape library, 0 drives, 500 slots – requires 3X-KZPCA-AA adapter	281627-B21
	ESL9595SL SDLT tape library, 2 drives, 500 slots – requires 3X-KZPCA-AA adapter	281627-B22
	ESL9595SL SDLT tape library, 16 drives, 500 slots – requires 3X-KZPCA-AA adapter	281627-B28
	ESL9595SL SDLT tape library, 0 drives, 595 slots – requires 3X-KZPCA-AA adapter	281628-B21
	ESL9595SL SDLT tape library, 2 drives, 595 slots – requires 3X-KZPCA-AA adapter	281628-B22
	ESL9595SL SDLT tape library, 16 drives, 595 slots – requires 3X-KZPCA-AA adapter	281628-B28
3U Rackmount Tape Drive Enclosure	3U LVD Rackmount Tape Drive Enclosure for use in H9Axx M-Series Cabinets, 0 drives, carbon black	274338-B21
	Rackmount Kit for H9Axx M-Series Cabinets, carbon black – required for mounting 3U Rackmount Tape Drive Enclosure in M-Series cabinet	3R-A3804-AA
	NOTE: The 3U Rackmount Tape Enclosure supports up to four internal half-height removable devices, or up to two full-height devices; select up to four AIT or DAT devices or two DLT/SDLT devices with 3U Rackmount Tape Enclosure (274338-B21) or select one of the preconfigured configurations listed below.	
	AIT 35/70-GB 3U tape drive; requires 3X-KZPCA-AA LVD adapter, carbon black	216884-B21
	AIT 50/100-GB 3U tape drive; requires 3X-KZPCA-AA LVD adapter, carbon black	3R-A3753-AA 157766-B22
	DAT 20/40-GB 3U tape drive; requires 3X-KZPCA-AA LVD adapter, carbon black	3R-A3752-AA 157769-B22
	DLT8000 40/80-GB tape drive; requires 3X-KZPCA-AA LVD adapter	146196-B22
	SDLT 110/220-GB tape drive; requires 3X-KZPCA-AA LVD adapter	192106-B25
	SDLT 160/320-GB tape drive; requires 3X-KZPCA-AA LVD adapter, carbon black	257319-B21
	Preconfigured configurations	
	AIT 50-GB 3U rackmount kit, carbon black	274333-B21
	DLT 40/80-GB, 3U rackmount kit, carbon black	274332-B21
	DLT 40/80-GB, dual-drive, 3U rackmount kit, carbon black	274335-B21
	SDLT 110/220-GB, 3U rackmount kit, carbon black	274331-B21
	SDLT 110/220-GB, dual-drive, 3U rackmount kit, carbon black	274334-B21

Options

Step 11 – Storage Devices – Optional *(continued)*

Step 11a -Tape Drives *(continued)*

5U Rackmount Tape Drive Enclosure	5U LVD Rackmount Tape Drive Enclosure for use in H9Axx M-Series Cabinets, 0 drives, carbon black	274339-B21
	Rackmount Kit for H9Axx M-Series Cabinets, carbon black – required for mounting 5U Rackmount Tape Drive Enclosure in M-Series Cabinet	254795-001
	NOTE: The 5U Rackmount Tape Enclosure supports four full-height removable devices; select up to four DLT or SDLT devices with 5U Rackmount Tape Enclosure (274339-B21) or select one of the preconfigured configurations listed below.	
	DLT8000 40/80-GB tape drive; requires 3X-KZPCA-AA LVD adapter	146196-B22
	SDLT 110/220-GB tape drive; requires 3X-KZPCA-AA LVD adapter	192106-B25
	SDLT 160/320-GB tape drive; requires 3X-KZPCA-AA LVD adapter, carbon black	257319-B21
	Preconfigured configurations	
	SDLT 110/220-GB Tape Array III, 5U rackmount kit, carbon black	274336-B21
	DLT 40/80-GB Tape Array III, 5U rackmount kit, carbon black	274337-B21
	DLT Tape Array III, Model 0 enclosure, U.S.	168047-001
	Same as above, International	168047-B31
	Same as above, Japan	168047-291

Step 11b –Modular Data Routers

Modular Data Routers	The following Modular Data Routers are supported with MSL5000 and ESL9000 tape libraries:	
	One Fibre Channel x 2 HVD Data Router, 3R-A2673-AA	218240-B21
	One Fibre Channel x 2 LVD Data Router, 3R-A2774-AA	218241-B21
	Two Fibre Channel x 4 HVD Data Router, 3R-A3292-AA	163082-B21
	Two Fibre Channel x 4 LVD Data Router, 3R-A3312-AA	163083-B21
	Two Fibre Channel x 4 HVD FC to SCSI Data Route, Tru64 UNIX (3R-A3741-AA)	262654-B21
	Two Fibre Channel x 4 LVD FC to SCSI Data Router, Tru64 UNIX (3R-A3740-AA)	262653-B21

Step 11 – Storage Devices – Optional *(continued)*

Step 11c – External Storage Solutions/Controllers

	Enterprise Virtual Array Model 2C6D 60-Hz, 42U opal storage cabinet, M3220 controller assembly with dual HSV110 controllers, six M5214 dual FC loop 14-bay drive enclosures	234345-B21
	Enterprise Virtual Array Model 2C6D 50-Hz, 42U opal storage cabinet, M3220 controller assembly with dual HSV110 controllers, six M5214 dual FC loop 14-bay drive enclosures	234345-B22
	Enterprise Virtual Array Model 2C12D 60-Hz, includes 42U opal storage cabinet, M3220 controller assembly with dual HSV110 controllers, 12 M5214 dual FC loop 14-bay drive enclosures	234346-B21
	Enterprise Virtual Array Model 2C12D 50-Hz, includes 42U opal storage cabinet, M3220 controller assembly with dual HSV110 controllers, 12 M5214 dual FC loop 14-bay drive enclosures	234346-B22
	Enterprise Virtual Array Model 8C8D 60-Hz, includes 42U opal storage cabinet, four M3220 controller assembly with eight HSV110 controllers, eight M5214 dual FC loop 14-bay drive enclosures	239782-001
	Enterprise Virtual Array Model 8C8D 50-Hz, includes 42U opal storage cabinet, four M3220 controller assembly, with eight HSV110 controllers, eight M5214 dual FC loop 14-bay drive enclosures	249977-B21
	Fibre Channel Controller (HSG80), includes 256-MB cache, requires following firmware: 8.6-4F ACS FW (222318-B22, QB-6BUAA-SD), one per controller 8.6-4S ACS FW (222364-B22, QB-6ENAA-SC), one per controller 8.6-4P ACS FW (222316-B22, QB-6CAAA-SD), one per controller requires Tru64 UNIX software: 222320-B23, QB-65RAB-SE, one per controller requires OpenVMS software: 222321-B22, QB-65RAC-SD, one per controller	DS-HSG80-BK
	Additional 256-MB cache for HSG80	DS-HSDIM-AC 380674-b21
	Single cache battery, one per HSG80 controller	DS-SE2CS-CB 135823-B21
	Model 2200 controller shelf for HSG80 controller (DS-SE2ZS-C8)	135820-B21

Step 11d – Fibre Channel Options

	The following disk drives, hubs, data routers, switches, and cables are used in Fibre Channel configurations using the DS-KGPSA-xx adapter.	
Fibre Channel Disk Drives	36-GB 10K rpm dual-port 2-Gb/sec FC-AL 1-inch (25.4 mm) drive	238590-B21
	72-GB 10K rpm dual-port 2-Gb/sec FC-AL 1-inch (25.4 mm) drive	238921-B21
Fibre Channel Hubs	Fibre Channel 7-port Storage Hub, International (Tru64 UNIX only)	234453-B31 DS-SWXHB-17
	Fibre Channel 7-port Storage Hub, Japan (Tru64 UNIX only)	234453-291 DS-SWXHB-J7
Fibre Channel Data Routers	1 Fibre Channel x 2 HVD data router	163082-B21 3R-A2673-AA
	1 Fibre Channel x 2 LVD data router	163083-B21 3R-A2774-AA
	2 x 4 LVD Fibre Channel to SCSI Network Storage Router	262653-B21 3R-A3740-AA
	2 x 4 HVD Fibre Channel to SCSI Network Storage Router	262654-B21 3R-A3741-AA

Options

Step 11 – Storage Devices – Optional *(continued)*

Step 11d – Fibre Channel Options *(continued)*

Fibre Channel Switches	Fibre Channel 2-Gb 8-port SAN switch	258707-B21 (U.S./Canada orders) DS-DSGGD-AC (Other country orders)
	Fibre Channel 2-Gb 16-port SAN switch	283056-B21 (U.S./Canada orders) DS-DSGGD-AD (Other country orders)
	Fibre Channel 2-Gb SAN switch – 16-port; requires Tru64 UNIX V5.1A Patch Kit: T64V51AB01AS0001-20020116.tar	287055-B21 (U.S./Canada orders) DS-DSGGD-BA (Other country orders)
	Fibre Channel 2-Gb 64-port Core Switch	254508-B21 (U.S./Canada orders DS-DSGGE-AB (Other country orders
McData 64-port Fibre Channel SAN Director Class Switches	SAN Director 64 (1 GB) 32 ports, base model	DS-DMGGD-AA
	SAN Director Connectivity Manager Kit	DS-DMGGO-AA
	SAN Director 64 Long-wave 4-port module kit	DS-DMGGD-AC
	SAN Director 64 Short-wave 4-port module kit	DS-DMGGD-AD
	SAN Director 64 Combo, Long – 1 port/Short – 3 ports - Wave Module Kit	DS-DMGGD-AE
	NOTE: Connection for, or between, 1-Gb and/or 2-Gb SAN switches requires different cables. Refer to the Switches, Hubs, and Interconnects QuickSpecs at: http://www.compaq.com/products/quickspecs/North_America/10490.html	
Fibre Channel Cables	**NOTE**: The following LC-SC connector cables support connectivity between 1-Gb and 2-Gb devices.	
	2-metre LC-SC multi-mode Fibre Channel cable	221691-B21 (U.S./Canada orders) 3R-A2976-AA (Other country orders)
	5-metre LC-SC multi-mode Fibre Channel cable	221691-B22 (U.S./Canada orders) 3R-A2977-AA (Other country orders)
	15-metre LC-SC multi-mode Fibre Channel cable	221691-B23 (U.S./Canada orders) 3R-A2978-AA (Other country orders)

Step 11 – Storage Devices – Optional *(continued)*

Fibre Channel Cables *(continued)*	**NOTE**: The following LC-LC connector cables support connectivity between 2-Gb and 2-Gb devices.	
	2-metre LC-LC multi-mode Fibre Channel cable	221692-B21 (U.S./Canada orders) 3R-A2979-AA (Other country orders)
	5-metre LC-LC multi-mode Fibre Channel cable	221692-B22 (U.S./Canada orders) 3R-A2980-AA (Other country orders)
	15-metre LC-LC multi-mode Fibre Channel cable	221692-B23 (U.S./Canada orders) 3R-A2981-AA (Other country orders)

Step 12 – Graphics Adapters – Optional

- Select graphics adapter, monitor, and country-specific keyboard for Tru64 UNIX and OpenVMS systems if required

		Maximum # Supported				
		Tru64 UNIX	**OpenVMS**	**PCI/AGP Slot**		
2D Graphics	3Dlabs Oxygen VX1 32-MB PCI 2D graphics accelerator; can operate in all slots; for best performance, use 66-MHz slots. **NOTE**: Only VX1 cards may be used in a multi-head environment.	4	4	3.3/5 V	66 MHz	SN-PBXGF-AB
	3Dlabs Oxygen VX1 32-MB AGP 2D graphics accelerator; AGP can only operate in slot 3; requires Tru64 UNIX V5.1A with NHD-4; requires OpenVMS V7.3-1; restricted to Model 1B; no TruCluster support. **NOTE**: Only VX1 cards may be used in a multi-head environment.	4 (1 AGP3 PCI)	4 (1 AGP3 PCI)	1.5 V	4X	SN-PBXGF-BC
3D Graphics	PowerStorm 300 3D multi-head graphics accelerator with 15-MB frame buffer memory and 16-MB texture memory; use in slots 3, 6, 9, or 10. **NOTE**: Only PowerStorm cards may be used in a multi-head environment.	4	4	5 V	33 MHz	SN-PBXGD-AD
	PowerStorm 350 3D multi-head graphics accelerator with 30-MB frame buffer memory and 32-MB texture memory; use in slots 3, 6, 9, or 10. **NOTE**: Only PowerStorm cards may be used in a multi-head environment.	4	4	5 V	33 MHz	SN-PBXGD-AE

Step 13– Monitors – Optional

- Graphics monitors other than those listed can be used if compatible with SVGA graphics ordered with system.
- At least one video cable, 1.8-metre length, is included with all variants of monitors.
- Video extension cable required if monitor is located more than 1.5-metre from system.
- Monitors will ship with, but not be integrated with systems.

Step 13– Monitors – Optional *(continued)*

Carbon/Silver Monitors	P720 17-inch (16-inch viewable image size) auto-scanning colour monitor, Diamondtron NF, 0.25-mm aperture grille pitch, VGA to 1280 x 1024 @85 Hz, MPRII/TCO 99/Energy Star Compliant, Northern Hemisphere with NA power cord, VGA cable	3R-A3388-AA 244373-001
	Same as above, with Euro-power cord	3R-A3389-AA 244373-021
	Same as above, APD, no power cord	3R-A3390-AA 244373-B24
	Same as above, PRC with power cord, CCIB	3R-A3391-AA 244373-AA1
	Same as above, Southern Hemisphere, with Australia/New Zealand power cord	3R-A3392-AA 244373-011
	P920 19-inch (18-inch viewable image size) auto-scanning colour monitor, Diamondtron NF, 0.24-mm aperture grille pitch, VGA to 1600 x 1200 @85 Hz, MPRII/TCO 99/Energy Star Compliant, Northern Hemisphere with NA power cord, VGA cable	3R-A3393-AA 244375-001
	Same as above, with Euro power cord	3R-A3394-AA 244375-021
	Same as above, PRC with power cord, CCIB	3R-A3396-AA 244375-AA1
	Same as above, Southern Hemisphere, 0.25 to 0.27 mm aperture grille pitch, with Australia/New Zealand power cord	3R-A3397-AA 244375-011
	P1220 22-inch (20–inch viewable image size) auto-scanning colour monitor, Diamondtron NF, 0.24-mm aperture grille pitch, VGA to 1792 x 1344 @85Hz, dual video input, USB Hub, MPRII/TCO 99/Energy Star Compliant, Northern Hemisphere with NA power cord, VGA cable	3R-A3398-AA 244374-001
	Same as above, with Euro power cord	3R-A3399-AA 244374-021
	Same as above, APD, no power cord	3R-A3400-AA 244374-B24
	Same as above, PRC with power cord, CCIB	3R-A3401-AA 244374-AA1
	Same as above, Southern Hemisphere, with Australia/New Zealand power cord	3R-A3402-AA 244374-011
Carbon/Silver Flat Panel Monitors	TFT8030, 18.1-inch (18-inch viewable image size) TFT flat panel monitor, 0.28 mm pixel pitch, 1280 x 1024 @75 Hz, multi-mode support, MPRII/TCO99/Energy Star compliant, six video input connectors (two VGA, two DVI-I, one S-video, and one C-video), NA power cord, VGA and DVI-I cables	3R-A3511-AA 234362-001
	TFT5030, 15.1-inch (15-inch viewable image size) TFT flat panel monitor, 0.30 mm pixel pitch, 1024 x 768 @75 Hz, multi-mode support, MPRII/TCO99/Energy Star compliant, two video input connectors (one VGA and one DVI-I), NA power cord, VGA and DVI-I cables	3R-A3353-AA 228134-001
Video Extension Cable	6-foot/1.8-metre video extension cable	BN39C-02

Step 13– Monitors – Optional *(continued)*

Monitor Power Cords	North America	BN26J-1K
	Australia, New Zealand, 2.5-metre	103541-011 (U.S./Canada orders)
		BN19H-2E (Other country orders)
	Central Europe, 2.5-metre	BN19C-2E
	Denmark, 2.5-metre	103541-481 (U.S./Canada orders)
		BN19K-2E (Other country orders)
	Egypt, India, South Africa, 2.5-metre	103541-AR1 (U.S./Canada orders)
		BN19S-2E (Other country orders)
	Israel, 2.5-metre	BN18L-2E
	Italy, 2.5-metre	103541-461 (U.S./Canada orders)
		BN35M-02 (Other country orders)
	Japan, 2.5-metre, Dentori approved	3X-BN46F-02
	Switzerland, 2.5-metre	103541-511 (U.S./Canada orders)
	UK, Ireland, 2.5-metre	BN19A-2E

Step 14 – Keyboards, Mouse, and Documentation – Optional

Step 14a - Keyboards

- Select an opal or carbon keyboard and mouse depending on the monitor colour selection (opal or carbon/silver).
- Order country-specific keyboard or mouse only if required
- All keyboards listed may not be available in all geographies
- Select an opal OpenVMS keyboard for use with VT5xx text terminals.

	Opal (for VT5xx)	**Carbon**	
Keyboard/Language	**OpenVMS**	**Tru64 UNIX**	**OpenVMS**
U.S./English keyboard	LK461-A2	3R-LKQ48-AA	3X-LK462-A2
Arabic keyboard	-	3R-LKQ48-BR	-
Belgian keyboard	LK461-AB	3R-LKQ48-AB	3X-LK462-AB
BHCSY keyboard	-	3R-LKQ48-AX	-
Canadian/English keyboard	LK461-AQ	-	3X-LK462-AQ
Canadian/French keyboard	LK461-AC	3R-LKQ48-AC	3X-LK462-AC
Cyrillic keyboard (Russian)	LK461-BT	3R-LKQ48-BT	3X-LK462-BT
Czech keyboard	LK461-BV	3R-LKQ48-BV	3X-LK462-BV
Danish keyboard	LK461-AD	3R-LKQ48-AD	3X-LK462-AD
Dutch keyboard	LK461-AH	3R-LKQ48-AH	3X-LK462-AH
Finnish keyboard	LK461-AF	3R-LKQ48-AF	3X-LK462-AF
French keyboard	LK461-AP	3R-LKQ48-AP	3X-LK462-AP
German keyboard	LK461-AG	3R-LKQ48-AG	3X-LK462-AG
Greek keyboard	LK461-BH	3R-LKQ48-BH	3X-LK462-BH
Hebrew keyboard	LK461-AT	3R-LKQ48-AT	3X-LK462-AT
Hungarian keyboard	LK461-BQ	3R-LKQ48-BQ	3X-LK462-BQ
International keyboard	-	3R-LKQ48-BA	-
Italian keyboard	LK461-AI	3R-LKQ48-AI	3X-LK462-AI
Japanese keyboard	-	3R-LKQ48-AJ	-
Korean keyboard	-	3R-LKQ48-BK	-
Latin-American keyboard	-	3R-LKQ48-AR	-
Norwegian keyboard	LK461-AN	3R-LKQ48-AN	3X-LK462-AN
Polish keyboard	LK461-BP	3R-LKQ48-BP	3X-LK462-BP
Portuguese keyboard	LK461-AV	3R-LKQ48-AV	3X-LK462-AV
Romanian keyboard	LK461-BL	-	3X-LK462-BL
Simplified Chinese keyboard	-	3R-LKQ48-CV	-
Slovak keyboard	LK461-CZ	3R-LKQ48-CZ	3X-LK462-CZ
Spanish keyboard	LK461-AS	3R-LKQ48-AS	3X-LK462-AS
Swedish keyboard	LK461-AM	3R-LKQ48-AM	3X-LK462-AM
Swiss/French keyboard	LK461-AK	3R-LKQ48-AK	3X-LK462-AK
Swiss/German keyboard	LK461-AL	-	3X-LK462-AL
Traditional Chinese keyboard	-	3R-LKQ48-BI	-
Thai keyboard	-	3R-LKQ48-CB	-
Turkish keyboard	LK461-BU	3R-LKQ48-BU	3X-LK462-BU
Turkish/French keyboard	LK461-BW	-	3X-LK462-BW
UK keyboard	-	3R-LKQ48-AE	-
Yugoslavian keyboard	LK461-BY	-	3X-LK462-BY

Options

Step 14 – Keyboards, Mouse, and Documentation – Optional *(continued)*

Step 14b – Mouse

Mouse	3-button mouse – opal	SN-PBQWS-WA
	3-button mouse – carbon	3R-A3480-AA
Keyboard or Mouse Extension Cable	6-foot/1.8-metre keyboard or mouse extension cable – to extend both keyboard and mouse order two cables	3X-BC34A-06

Step 14c – Documentation

Documentation	Additional ES45 System Information Kit (includes Owners Guide, print and CD)	QA-6NUAB-G8

Step 15 – Console Terminal – Optional

- Any terminal can be used as a console device
- Third-party console devices require an EIA-232 25-pin DSUB connector

VT510 video terminal; requires keyboard, H8575-x adapter, and BC16E-x cable	VT510-xx
Console cable, female connector (25-pin passive adapter)	H8575-A
Console cable, male connector (adapter with EOS, ESD, 25 POS D-SUB)	H8575-D

Step 16 – Software – Media and documentation required for first system on site

- Software Processor Code = E

Tru64 UNIX

- AlphaServer ES45 Tru64 UNIX systems include Unlimited User license, Server Extension license, Internet Express and iPlanet Web Server – Enterprise Edition 4.0

When using Tru64 UNIX V5.1A	Tru64 UNIX media and online documentation on CD-ROM	QA-6ADAA-H8
	Tru64 UNIX full hard copy documentation	QA-6ADAA-GZ
	TruCluster Plus Software Package, licenses for TruCluster Server, Logical Storage Manager and AdvFS Utilities	QP-6R9AE-AA
	TruCluster Server License	QL-6BRAE-AA
	Logical Storage Manager License	QL-2GVAE-AA
	AdvFS Utilities License	QL-0EGAE-AA
	Advanced Server for Tru64 UNIX, 25 client concurrent use license	QL-5U29M-3D
	Advanced Server for Tru64 UNIX, 50 client concurrent use license	QL-5U29M-3E
	Advanced Server for Tru64 UNIX, 100 client concurrent use license	QL-5U29M-3F
	Advanced Server for Tru64 UNIX, 250 client concurrent use license	QL-5U29M-3G
	Advanced Server for Tru64 UNIX, 500 client concurrent use license	QL-5U29M-3H
	Layered products media and documentation for Tru64 UNIX on CD-ROM	QA-054AA-H8
	DECnet/OSI extended function license for Tru64 UNIX	QL-MTJAE-AA
	DECnet/OSI end-system license for Tru64 UNIX	QL-MTKAE-AA
	Open3D for Tru64 UNIX on CD-ROM, includes graphics drivers	QA-OAFAA-H8

Step 16 – Software – Media and documentation required for first system on site *(continued)*

OpenVMS

- AlphaServer ES45 OpenVMS systems include Base license with System Manager license and Compaq Enterprise Integration Server License Package for OpenVMS Revision V3.1
- AlphaStation ES45 OpenVMS systems include pre-installed software, Base license, Concurrent Use 1-user license, NAS 150 Client license, Compaq MMS RT license and Compaq Open3D traditional license
- Compaq Enterprise Integration Package includes licenses for TCP/IP Services for OpenVMS, DECwindows Motif for OpenVMS Alpha, DECprint Supervisor for OpenVMS Alpha Plus, DECprint Supervisor for OpenVMS Open, DECnet-Plus for OpenVMS Alpha End System, Archive/Backup System for OpenVMS Management Tools, Archive/Backup Agent for Windows NT, OpenVMS Disk Services for Windows NT, Office Server for OpenVMS, PATHWORKS 32, PATHWORKS V6 for OpenVMS – Advanced Server, and DIGITAL Office Server Client Access License
- OpenVMS Concurrent Use licenses provide the right to interactively use the operating system by the specified number of concurrent users on a designated OpenVMS system. OpenVMS Concurrent Use licenses can be moved from one system to another at user discretion and can be shared in a mixed OpenVMS VAX and OpenVMS Alpha cluster.
- OpenVMS Traditional Unlimited Use license is system specific and can only be used on one system at a time. It cannot be shared between systems or in an OpenVMS VAX or OpenVMS Alpha Cluster.

Concurrent Use 1-user license	QL-MT3AA-3B
Concurrent Use 2-user license	QL-MT3AA-3C
Concurrent Use 4-user license	QL-MT3AA-3D
Concurrent Use 8-user license	QL-MT3AA-3E
Concurrent Use 16-user license	QL-MT3AA-3F
Concurrent Use 32-user license	QL-MT3AA-3G
Concurrent Use 64-user license	QL-MT3AA-3H
Concurrent Use 128-user license	QL-MT3AA-3J
Concurrent Use 256-user license	QL-MT3AA-3K
Traditional unlimited user license	QL-MT2AE-AA
OpenVMS media and documentation on CD-ROM	QA-MT1AA-H8
OpenVMS full hard copy documentation	QA-001AA-GZ
Layered products media and documentation for OpenVMS on CD-ROM, includes Enterprise Integration Server for OpenVMS media and documentation.	QA-03XAA-H8
DECnet extended function license for OpenVMS	QL-MTGAE-AA
DECnet end-system to extended function upgrade license for OpenVMS	QL-MTHAE-AA
OpenVMS Cluster license for Alpha systems	QL-MUZAE-AA
OpenVMS Volume Shadowing license	QL-2A1AE-AA

Step 17 – Hardware and Software Supplemental Support Services – Optional

- Select one of the optional CarePaq Priority Service Packages described below that best supports the customer's operational requirements for system availability.

CarePaq Priority Services	•	CarePaq Priority Services are available for AlphaServer systems running Tru64 UNIX or OpenVMS operating system. Priority Services are designed for the growing number of customers who need support beyond the basic warranty. It offers six service packages – Warranty Plus, Priority, Priority Silver, Priority Gold, and Priority Executive with coverage for both Principal servers systems and SSPs (Subsequent System Packages) - that meet a full range of customer support requirements.

Program Features – Principal Server

Warranty Plus	•	9 x 5 HW/SW support
	•	Next Business Day on-site hardware support
	•	2-hour response for Bronze software support
	•	License Subscription for Compaq O/S software and embedded L/P (unlimited users and server extensions for Tru64 UNIX)
Priority	•	9 x 5 HW/SW support
	•	4-hour response on-site hardware support
	•	2-hour response for Bronze software support
	•	License Subscription for Compaq O/S software and embedded L/P (i.e., EIS for OpenVMS, unlimited users, and server extensions for Tru64 UNIX)
	•	Consolidated Software Media Update Distribution for OpenVMS or Tru64 UNIX and their layered products. (Some layered products on Consolidated Media Update Distribution can be ordered separately.)
Priority Silver	•	24 x 7 HW Support. Named Engineer, 4-hour response
	•	24 x 7 Silver SW Support - Named Account Rep, 1-hour response Monday – Friday, 8AM-5PM local time; 2-hour response remaining hours
	•	License Subscription for Compaq O/S software and embedded L/P (i.e., EIS for OpenVMS, unlimited users, and server extensions for Tru64 UNIX)
	•	Consolidated Software Media Update Distribution for OpenVMS or Tru64 UNIX and their layered products. (Some layered products on Consolidated Media Update Distribution can be ordered separately.)
	•	Technical newsletter and SW activity review
	•	Proactive Patch Notification
	•	One System Healthcheck per year

Step 17 – Hardware and Software Supplemental Support Services – Optional *(continued)*

Program Features – Principal Server *(continued)*

Priority Gold	• 24 x 7 HW support with Named Engineer, 4-hour response for on-site support • 24 x 7 Gold SW support - Named Account Rep • 30-minute callback (critical); 1-hour callback (non-critical) • License Subscription for Compaq O/S software and embedded L/P (i.e., EIS for OpenVMS, unlimited users, and server extensions for Tru64 UNIX) • Consolidated Software Media Update Distribution for OpenVMS or Tru64 UNIX and their layered products. (Some layered products on Consolidated Media Update Distribution can be ordered separately.) • Technical newsletter, SW activity review and 10 hrs Upgrade impact planning • Proactive Revision Management • Two System Healthchecks per year • Mandatory pre-qualification required
Priority Gold Executive	• 24 x 7 HW support with Named Engineer, 2-hour response for on-site support • 24 x 7 Gold SW support - Named Account Rep • 30-minute callback (critical); 1-hour callback (non-critical) • License Subscription for Compaq O/S software and embedded L/P (i.e., EIS for OpenVMS, unlimited users, and server extensions for Tru64 UNIX) • Consolidated Software Media Update Distribution for OpenVMS or Tru64 UNIX and their layered products. (Some layered products on Consolidated Media Update Distribution can be ordered separately.) • Technical newsletter, SW activity review and 10 hrs Upgrade impact planning • Proactive Revision Management • Two System Healthchecks per year • Customer site must be within 25 miles of a Compaq service location • Mandatory pre-qualification required

Program Features – Additional Services

SSPs (Subsequent System Packages)	• For Priority, Priority Silver, Priority Gold, and Priority Gold Executive • HW Support at same level as corresponding package for Principal server • License Subscription: Compaq O/S (where applicable) • Telephone support through Principal server covered by full support package
Installation	• Preinstallation review • Unpacking of equipment • Assemble and test • Basic product usage info • No software installation added
Installation & Startup Compaq O/S	• Preinstallation review • Unpacking of equipment • Assemble and test • Basic product usage info • Install operating systems • Product configuration • Print & network access • Orientation

Step 17 – Hardware and Software Supplemental Support Services – Optional *(continued)*

Program Features – Additional Services *(continued)*

Model/CarePaq Priority Service	Principal Server 1 year	Principal Server 3 years	Subsequent Systems 1 year	Subsequent Systems 3 years
AlphaServer ES45 Model 2				
Warranty Plus	Not available	FM-F002E-36	Not available	Not available
Priority	FM-F012E-12	FM-F012E-36	FM-F212E-12	FM-F212E-36
Priority Silver	FM-F042E-12	FM-F042E-36	FM-F242E-12	FM-F242E-36
Priority Gold	FM-F082E-12	FM-F082E-36	FM-F282E-12	FM-F282E-36
Priority Gold Executive	FM-F092E-12	FM-F092E-36	FM-F292E-12	FM-F292E-36
Installation	FM-FINST-EB	FM-FINST-EB	FM-FINST-EB	FM-FINST-EB
Installation & Startup	FM-FSTAR-EB	FM-FSTAR-EB	FM-FSTAR-EB	FM-FSTAR-EB

NOTES:

- AlphaServer ES45 systems include one-year parts and labour warranty with 5 x 9, on-site Next Business Day response.
- Priority Services include support for new Compaq branded hardware options internal to the AlphaServer enclosure plus a monitor (17-inch or less excluding flat panel models).
- External storage devices/cabinets carry their own level of warranty and should be quoted separately for uplifted warranty services.
- Five-year CarePaq Priority Service is available upon request. To quote five-year service, change the last two part number digits from 12 or 36 to 60.
- In addition to the CarePaq Priority Services, uplifted warranty Supplemental Services are available for separate hardware and software support. For more information on Hardware and Software Supplemental Services and other Compaq service options available for AlphaServers, please consult your Compaq Sales Account Manager or visit:
  English: http://www.compaq.ca/english/service/services.htm
  French: http://www.compaq.ca/Francais/service/servicesf.htm

NOTE: Certain restrictions and exclusions apply. For details, consult the Product Information Centre at 1-888-882-6672.

Technical Specifications

Tower Configuration	**Dimensions** (H x W x D)	20 x 15.25 x 31.7 in/50.8 x 38.7 x 80.5 cm		
	Shipping Dimensions	32.2 x 24 x 40 in/82.48 x 60.2 x 101.6 cm		
	Weight	Typical Configuration	144.3 lb/65.6 kg	
		Maximum Configuration	212.8 lb/96.7 kg	
	Shipping Weight	Typical Configuration	172 lb/78 kg	
		Maximum Configuration	242 lb/110 kg	
		Clearances	**Operating**	**Service**
		Front	29.5 in/75 cm	29.5 in/75 cm
		Rear	6 in/15 cm	29.5 in/75 cm
		Left Side	None	29.5 in/75 cm
		Right Side	None	None

Pedestal Configuration	**Dimensions** (H x W x D)	30.8 x 20 x 32.4 in/78.2 x 50.8 x 82.3 cm		
	Shipping Dimensions	42.4 x 39.5 x 23.9 in/107.7 x 100.3 x 60.7 cm		
	Weight	Typical Configuration	280 lb/127 kg	
		Maximum Configuration	350 lb/159 kg	
	Shipping Weight	Typical Configuration	328 lb/149 kg	
		Maximum Configuration	407 lb/185 kg	
		Clearances	**Operating**	**Service**
		Front	29.5 in/75 cm	29.5 in/75 cm
		Rear	6 in/15 cm	29.5 in/75 cm
		Left Side	None	None
		Right Side	None	29.5 in/75 cm

Rackmount System	**Dimensions** (H x W x D)	13.87 x 17.6 x 30.8 in/35.2 x 44.7 x 78.2 cm (fits 14 in [8U] standard RETMA cabinet)		
	Shipping Dimensions	28.8 x 24 x 40 in/73.2 x 60.7 x 101.6 cm		
	Weight	When lifting:	Typical Configuration	110 lb/50 kg
			Maximum	167.2 lb/76 kg
		Total added to cabinet (brackets, slides, cables):	Typical Configuration	130 lb/59 kg
			Maximum	202.4 lb/92 kg
	Shipping Weight	Typical Configuration	158 lb/72 kg	
		Maximum	233 lb/106 kg	
	Clearances	Operating	Service	
		See specific cabinet requirements	Minimum 4 ft/121.9 cm, 32.4 in/82.2 cm withdrawal on rails	

Technical Specifications

Cabinet Configuration		**H9A10 M-Series**	**H9A15 M-Series**
	Dimensions (H x W x D) (Depth includes rear door extender)	67x 23.6 x 41.5 in/ 170 x 60 x 105.4 cm	79 x 23.6 x 41.5 in/ 200 x 60 x 105.4 cm
	Shipping Dimensions	73 x 36 x 48 in/ 185.5 x 91.5 x 122 cm	85 x 36 x 48 in/ 216 x 91.5 x 122 cm
	Weight	Configuration dependent	Configuration dependent
	Shipping Weight	Nominal: 946 lb/430 kg Maximum: 1,375 lb/625 kg	Nominal: 1,056 lb/550 kg Maximum: 1,408 lb/640 kg

System Unit	**ENVIRONMENTAL**			
	Temperature	Operating (Tower, Pedestal, Rackmount)	50° to 95° F/10° to 35° C	
		Non-operating	-40° to 151° F/–40° to 66° C	
		Storage (60 days)	-40° to 151° F/–40° to 66° C	
		Rate of change	20° F/hr/11° C/hr	
		NOTE: Maximum operating temperature at sea level; reduce by 1.8° F (1° C) for each 2,000 ft (600 m) above sea level.		
	Humidity	Operating	20% to 80%	
		Non-operating	20% to 80%	
		Storage (60 days)	10% to 95%	
		Rate of change	20% hr	
	Maximum Wet Bulb Temperature	Operating	82° F/28° C	
		Storage (60 days)	115° F/46° C	
	Maximum Dew Point Temperature	Operating	36° F/2° C	
	Heat Dissipation		**Nominal**	**Maximum**
		Tower and Rack	980 W, 3347 BTU/hr	1440 W, 4918 BTU/hr
		Pedestal	1560 W, 5328 BTU/hr	2400 W, 8196 BTU/hr
		H9A10/H9A15 Cabinets	Configuration dependent	4800 W, 16392 BTU/hr
	Air Flow and Quality	Intake location	Front	
		Exhaust location	Rear Tower, Pedestal, Rack; Rear/top H9A10/H9A15	
		Particle size	N/A	
		Concentration	N/A	
	Altitude (unpressurized)	Operating	10,000 ft/3,048 m	
		Non-operating	40,000 ft/12,192 m	
		NOTE: Maximum operating temperature at sea level; reduce by 1.8° F (1° C) for each 2,000 ft (600 m) above sea level.		

System Unit *(continued)*

ACOUSTICS (Declared values per ISO 9296 and ISO 7779)

Acoustics			L_{Wad}, B	L_{nAm}, dBA (bystander position)
	Tower or Rackmount	Idle	6.4	47
		Operating	6.4	47
	Pedestal	Idle	6.6	48
		Operating	6.6	48
	NOTE: Current values for specific configurations are available, 1 B = 10 dBA.			
Vibration	Operating		10 to 500 Hz 0.1 G peak	
	Non-operating		1.03 Grms 5-300 Hz	

ELECTRICAL (Power supplies are universal, PFC, auto ranging, 200–240 VAC)

Nominal Voltage (VAC)	200 to 240		
Voltage Range (VAC) **temporary condition**	180 to 250		
Power Source Phase	Single		
Nominal Frequency (Hz)	50/60		
Frequency Range (Hz)	47 to 53/57 to 63		
RMS Current	*Tower and Rackmount*	Single power cord	5.6A
		Multiple power cords	3.6A
		Maximum VA	1440
	Pedestal	Each power cord	8.6A
		Maximum VA	2070
	M-Series Cabinet (configuration dependent)	Nominal voltage (VAC)	200 to 240
		Each power cord	16A
Power Cords	*Tower* (mandatory)	Up to 3 (Country specific)	IEC 320 to country-specific
	Pedestal (mandatory)	2 (Country specific)	IEC 320 C13 to country-specific
	Rackmount (included)	3 (14 ft 10 in/52 cm)	IEC 320 C13 to IEC 320 C14
	Cabinet (included)	Up to 4 (10 ft /305 cm)	200-240 V non-removable NEMA L6-20P for North America or 200-240 V non-removable IEC 309

System Unit *(continued)*	**ELECTRICAL** (Power supplies are universal, PFC, auto ranging, 200–240 VAC) *(continued)*		
	Regulatory	Agency Approvals	UL: Listed to UL1950 3rd edition
			UL CNL: Certified to CAN/CSA-C22.2 No. 950-1995
			TUV: EN 60950/A11:1997, GS marked
			FCC: Part 15.B Class A
			IC ICES-003 Class A
			CE: EN55022:1998, EN55024:1998, EN61000-3-2:1995, EN61000-3-3:1995
			VCCI:V-3/97.04 Class A
			BSMI: CNS13438 Class A
			C-Tick: AS/NZS 3548:1995 Class A
		Reviewed to	AS/NZ 3260:1993 Australian/New Zealand Standard
			EN 60950:2000
			IEC 60950:1999, 3rd edition
			UL 60950, 3rd edition, 2000

© 2002 Compaq Canada Corporation (An HP Company). All rights reserved. Printed in Canada.

Compaq, the Compaq logo, AlphaServer, CarePaq, Compaq Insight Manager, OpenVMS, StorageWorks, Tru64, and TruCluster are trademarks of Compaq Information Technologies Group, L.P. in the U.S. and/or other countries.Windows NT is a trademark of Microsoft Corporation in the U.S. and/or other countries. UNIX is a trademark of The Open Group in the U.S. and/or other countries. All other product names mentioned herein may be trademarks or registered trademarks of their respective companies.

Compaq shall not be liable for technical or editorial errors or omissions contained herein. The information is provided ″as is″ without warranty of any kind and is subject to change without notice. The warranties for Compaq products are set forth in the express limited warranty statements accompanying such products. Nothing herein should be construed as constituting an additional warranty.