AlphaServer ES40 Tru64 UNIX and OpenVMS
V1.8—24 June 1999

Systems and Options Catalog

Product Description

The Compaq AlphaServer ES40 is a 500 MHz EV6 based Alpha microprocessor server with 4 MB secondary cache with a choice of enclosures and Tru64 UNIX or OpenVMS operating systems. A choice of enclosures is available: Tower enclosure, Pedestal enclosure, and a Rack kit that supports installing the system in an M-series cabinet.

Compaq AlphaServer ES40 systems are available in two Models:

- **AlphaServer ES40 Model 1** supports six 64-bit PCI I/O expansion slots and four memory options.
- **AlphaServer ES40 Model 2** supports ten 64-bit PCI I/O expansion slots and eight memory options.

Both models support four CPUs and come standard with a 1.44 MB diskette drive, a CD-ROM drive, two EIA-232 full duplex asynchronous modem control serial ports, one bi-directional enhanced parallel port, one RMC dedicated serial port, and keyboard and mouse ports. AlphaServer ES40 systems support a maximum of two internal Disk Drive Cages. Each disk drive cage includes a one-port Ultra2 SCSI adapter and supports up to four 3.5-inch x 1.6-inch hard disk drives.

System Ordering Rules

- AlphaServer ES40 systems require the mandatory selection of: One Disk Drive Cage or one StorageWorks Shelf, a system disk, a network adapter and enclosure kit.

M-series Cabinet Enclosures

- Cabinet enclosures are available in two sizes: 67-inch and 79-inch.
- See Cabinet Configuration Chart for maximum combinations of systems and StorageWorks shelves supported in M-series Cabinet Enclosures.

ServerWORKS Manager provides advanced server and network management capabilities and is supplied with all AlphaServer systems. Simple Network Management Protocol (SNMP) enables information to pass from the managed system to the console for Tru64 UNIX and OpenVMS systems. Using ServerWORKS, the system manager may build and view topological maps of the network. Detailed server information is viewable, including system, network, storage, and environmental information. Alarms may be set against critical system parameters and events.

Compaq and the names of Compaq products referenced herein are either trademarks and/or service marks or registered trademarks and/or service marks of Compaq.

DIGITAL is a Trademark of Compaq Computer Corporation.

Microsoft, Windows, Windows NT, SQL Server, Office and BackOffice are either trademarks or registered trademarks of Microsoft Corporation.

Intel and Pentium are registered trademarks of Intel Corporation.

Other product and company names mentioned herein may be trademarks and/or service marks of their respective owners.

Step 1—Compaq AlphaServer ES40 Systems

Configuration menus require the **mandatory** selection of:

- Tru64 UNIX system from Step 1a, **or**
- OpenVMS system from Step 1b, and
- Tower enclosure, Pedestal enclosure, or Rack kit from Step 1c, and
- Selection of one Disk Drive Cage with included UltraSCSI adapter, or one StorageWorks Shelf is **mandatory**. If a StorageWorks shelf is selected an UltraSCSI adapter and SCSI cable are **mandatory**.
- One system disk drive
- One Ethernet adapter

Compaq AlphaServer ES40 systems include

- **Compaq AlphaServer ES40 Model 1**
  - 1 Alpha microprocessor 21264 6/500 MHz CPU with 4 MB cache.
  - 6 I/O expansion slots—64-bit PCI
  - Support for 4 memory options
- **Compaq AlphaServer ES40 Model 2**
  - 1 Alpha microprocessor 21264 6/500 MHz CPU with 4 MB cache.
  - 10 I/O expansion slots—64-bit PCI
  - Support for 8 memory options
- **Compaq AlphaServer ES40 Models 1 and 2 include**
  - 1.44 MB diskette drive in dedicated slot
  - 600 MB 32X CD-ROM drive in removable media slot
  - Two EIA-232 full duplex asynchronous modem control serial ports, 9-pin D-subminiature connectors
  - One bi-directional enhanced parallel port, 25-pin D-subminiature connector
  - One RMC dedicated serial port; 6-pin MMJ connector
  - Dual USB ports
  - Keyboard and mouse port
  - Knockouts for two 68-pin SCSI connections
  - One auto sensing power supply
- One 512 MB, 1 GB, or 2 GB memory option—uses one memory option slot (4 DIMMs per memory option).
- U.S. English keyboard with North America orders.
- Selection of a country-specific keyboard is mandatory for all non-North American orders.
- 3-button mouse.
- Integral remote system management console.
- Operating system license
- Customer documentation
- Hardware Warranty[1]
- Software Warranty[1]

1. Service upgrades are available; see Hardware and Software Supplemental Services.

Step 1a—AlphaServer ES40 Tru64 UNIX Systems

- Systems include pre-installed Tru64 UNIX, Base license, Unlimited User license, Server Extension license, and Internet Access Software license and Netscape's Enterprise Server 3.0.
- Order media and documentation separately.

Tru64 UNIX AlphaServer ES40 Model 1

Tru64 UNIX AlphaServer ES40 Model 1 systems have six total PCI slots. Installation of mandatory options reduces available slots.

Order Number	CPU and Cache	Memory	I/O Slots	Supported Memory Options	Enclosure	Drive Cage or Shelf	System Disk Drive	Network Adapter
DA-62AAA-CA	One 6/500 4 MB	512 MB	6	4	Mandatory	Mandatory	Mandatory	Mandatory
DA-62AAA-DA	One 6/500 4 MB	1 GB	6	4	Mandatory	Mandatory	Mandatory	Mandatory

Step 1a—AlphaServer ES40 Tru64 UNIX Systems *(continued)*

Tru64 UNIX AlphaServer ES40 Model 2

Tru64 UNIX AlphaServer ES40 Model 2 systems have ten total PCI slots. Installation of mandatory options reduces available slots.

Order Number	CPU and Cache	Memory	I/O Slots	Supported Memory Options	Enclosure	Drive Cage or Shelf	System Disk Drive	Network Adapter
DA-64AAA-DA	One 6/500 4 MB	1 GB	10	8	Mandatory	Mandatory	Mandatory	Mandatory

Key: Mandatory items must be on purchase order at initial order acceptance.

Step 1b—AlphaServer ES40 OpenVMS Systems

- Systems include pre-installed OpenVMS, Base license, and DIGITAL Enterprise Integration Package V2.0.
- Order media and documentation separately.

OpenVMS AlphaServer ES40 Model 1

OpenVMS AlphaServer ES40 Model 1 systems have six total PCI slots. Installation of mandatory options reduces available slots.

Order Number	CPU and Cache	Memory	I/O Slots	Supported Memory Options	Enclosure	Drive Cage or Shelf	System Disk Drive	Network Adapter
DY-62AAA-CA	One 6/500 4 MB	512 MB	6	4	Mandatory	Mandatory	Mandatory	Mandatory
DY-62AAA-DA	One 6/500 4 MB	1 GB	6	4	Mandatory	Mandatory	Mandatory	Mandatory

OpenVMS AlphaServer ES40 Model 2

OpenVMS AlphaServer ES40 Model 2 systems have ten total PCI slots. Installation of mandatory options reduces available slots.

Order Number	CPU and Cache	Memory	I/O Slots	Supported Memory Options	Enclosure	Drive Cage or Shelf	System Disk Drive	Network Adapter
DY-64AAA-DA	One 6/500 4 MB	1 GB	10	8	Mandatory	Mandatory	Mandatory	Mandatory

Key: Mandatory items must be on purchase order at initial order acceptance.

Step 1c—Mandatory Options

- Tower enclosure, Pedestal enclosure, or Rack kit.
- One Disk Drive Cage with included UltraSCSI adapter, **or**
  One StorageWorks Shelf
  Note: If StorageWorks shelf is selected an UltraSCSI adapter and SCSI cable are **mandatory**)
- One system disk drive.
- One Ethernet adapter.

Enclosures and Rack Kit

Selection of a Tower enclosure, Pedestal enclosure, or Rack Kit is **mandatory**.

Tower Enclosure

- Tower enclosure supports one system.
- Tower enclosure ordered in North America includes a 120 V power cord. Selection of a country-specific power cord is mandatory for all non-North American orders.
- Ordering an additional power cord is **mandatory** for each power supply ordered with a system installed in a Tower enclosure.

BA61M-MT Tower enclosure for AlphaServer ES40

Step 1c—Mandatory Options *(continued)*

Pedestal Enclosure

- Pedestal enclosure supports one system and up to three UltraSCSI StorageWorks shelves.
- Pedestal systems ordered in North America include two 120 V power cords. Selection of two country-specific power cords is mandatory for all non-North American orders.
- Pedestal (BA61P-Px) enclosure comes standard with two power strips that are factory configured to allow five free outlets. Should the number of BA356-RC/RD power supplies require a sixth outlet, this can be accommodated, but only if the system chassis is limited to two H7906-A9 power supplies.

BA61P-PA	Pedestal enclosure for AlphaServer ES40 120 V
BA61P-PB	Pedestal enclosure for AlphaServer ES40 240 V

Rack Kit

Selection of a Rack Kit is **mandatory** for each system installed in a cabinet.

BA61R-RM	Rack kit for AlphaServer ES40

Disk Drive Cage or StorageWorks Shelf—Mandatory

- Selection of one Disk Drive Cage with included UltraSCSI adapter, or one StorageWorks Shelf is **mandatory**.
  If a StorageWorks shelf is selected an UltraSCSI adapter and SCSI cable are **mandatory**.
- Tower enclosure supports up to two Disk Drive Cages only.
- Pedestal enclosure supports up to two Disk Drive Cages and up to three StorageWorks Shelves.
- M-series cabinet enclosure supports up to two Disk Drive Cages per system and up to six StorageWorks Shelves.

Disk Drive Cage

- System supports up to two Disk Drive Cages.
- Each Disk Drive Cage supports four 3.5-inch x 1.6-inch hard disk drives and includes a one-port Ultra2 SCSI single-ended adapter—Ultra2 SCSI adapter uses one system PCI slot. Included Ultra2 SCSI adapter is the **only** adapter supported on the BA610-4D Disk Drive Cage.

BA610-4D	Four bay Disk Drive Cage with Ultra2 SCSI adapter and cable

System Disk Drive—Supported in Disk Drive Cage

Selection of one disk drive is mandatory.

DS-RZ2DD-16	9.1 GB 10000 RPM Ultra2 SCSI drive
DS-RZ2ED-16	18.2 GB 10000 RPM Ultra2 SCSI drive

StorageWorks Shelf

Selection of a StorageWorks shelf requires the mandatory selection of an UltraSCSI adapter and SCSI cable, see Step 5a.

BA36R-RC	StorageWorks UltraSCSI single-bus shelf kit
BA36R-RD	StorageWorks UltraSCSI split-bus shelf kit

System Disk Drive—Supported in StorageWorks Shelf

Selection of one disk drive is mandatory.

DS-RZ1DA-VW	9.1 GB 7200 RPM UltraSCSI disk drive
DS-RZ1EA-VW	18.2 GB 7200 RPM UltraSCSI disk drive
DS-RZ1FB-VW	36.4 GB 7200 RPM UltraSCSI disk drive
DS-RZ1DD-VW	9.1 GB 10,000 RPM UltraSCSI disk drive
DS-RZ1ED-VW	18.2 GB 10,000 RPM UltraSCSI disk drive

Step 1c—Mandatory Options *(continued)*

Ethernet Adapter—Mandatory

- Selection of one Ethernet adapter is mandatory.
- Ethernet adapter is not required if KZPCM is selected as a SCSI adapter for StorageWorks shelf.

Order Number	Network Adapter and Minimum O/S version supported	Tru64 UNIX	OpenVMS
DE500-BA	PCI-based 10/100 Mbit Fast Ethernet adapter UTP	V4.0F	V7.1-2
DE504-BA	PCI-based 10/100 Mbit Quad Channel Ethernet adapter	V4.0F	V7.1-2
BN25G-xx	Cable for 10BaseT Twisted Pair connection		
DEGPA-SA[1]	PCI-based Gigabit Ethernet adapter, SC connectors, MMF	V4.0F	V7.1-2
BN34B-xx	SC-SC Dual FO cable, mm, pp. xx = length in meters		

1 No boot support on Gigabit Ethernet adapter.

Step 1d—M-series Cabinet Enclosure

For additional information on M-series Cabinet Enclosures see www.digital.com/alphaserver/products/m-series.html

M-series Top Gun Blue Cabinet Enclosures are available in two sizes:

- 67” high Cabinet Enclosure (H9A10-xx) 32U or 55.9” of usable vertical space.
- 79” high Cabinet Enclosure (H9A15-xx) 38U or 66.5” of usable vertical space.

Note: Selection of a Rear Cabinet Extender is **mandatory** for each H9A10 or H9A15 Cabinet, and Selection of a Rack Kit is **mandatory** for each system installed in a cabinet.

Cabinet Configuration Chart for AlphaServer ES40 (8U) with StorageWorks Shelves (4U)

Cabinet Enclosure	Rack Kit	Cabinet Extender	Cabinet Height and Space		Systems	Shelves	Ballast Kit
H9A10-MC/MD	**BA61R-RM**	**H9C10-TE**	56 inches	32U	1 2 3 4[1]	6 6 2 0	
H9A15-MC/MD	**BA61R-RM**	**H9C15-TE**	66.5 inches	38U	1 2 3 4	6 6 6[3] 2[4]	1[2]

1. Contact Compaq CustomSystems for cabinet configurations with four ES40 systems installed in an H9C10-MC/MD cabinet.
2. Installing one ES40 system in an H9A15 cabinet requires the mandatory selection of a ballast kit.
3. At 100V a maximum of two shelves are supported.
4. At 100V no shelves are supported.

Cabinet Configuration Chart for AlphaServer ES40 (8U) with StorageWorks BA370 (20U) and Disk Shelves

- 20U of vertical cabinet space is reserved for one front mounted BA370 Rackmount enclosure, or one front mounted and one rear mounted BA370 enclosure in top of cabinet, front to back. Note: Top Fan (1U) is removed from cabinet when BA370 Rackmount enclosure is installed.
- Systems and StorageWorks shelves are supported in remaining vertical space.
  - StorageWorks shelves are not supported in rear of Cabinet behind a front mounted BA370 Rackmount enclosure.

Cabinet Enclosure	Rack Kit	Cabinet Extender	Cabinet Height and Space		System	BA370	Shelves
H9A10-MC/MD	**BA61R-RM**	**H9C10-TE**	56 inches	32U	1[1]	1 Front BA370, **or** 2 Front & Back BA370s	—
H9A15-MC/MD	**BA61R-RM**	**H9C15-TE**	66.5 inches	38U	1[1] 2	1 Front BA370, **or** 2 Front & Back BA370s	6 —

1. Installing one BA370 and one system in an H9A10 or H9A15 cabinet requires the **mandatory** selection of a ballast kit. A Ballast kit is **not** required if two BA370s and one system are installed in an H9A10 or H9A15 cabinet.

Step 1d—M-series Cabinet Enclosure *(continued)*

M-series Cabinet Enclosures

M-series Cabinet Enclosure for AlphaServer ES40 requires the **mandatory** selection of:

- H9A10 or H9A15 Cabinet, 120V or 240V variant.
- Rack kit for each system ordered.
- H9A10 or H9A15 Rear Cabinet Extender.
- Cabinet front door based on cabinet height.
- Factory Integration.
- Ballast kit if only one system is ordered for H9A15 cabinet.

H9A10-MC	120 V dual 24 A controller, each with 10 NEMA 5-15R outlets, input power plug NEMA L5-30P, Americas, Asia Pacific. Includes rear door and top fan tray.
H9A10-MD	240 V dual 16 A controller, each with 12 IEC C13 outlets, input power plug IEC 309, 16A, Europe. Includes rear door and top fan tray.
H9A15-MC	120 V dual 24 A controller, each with 10 NEMA 5-15R outlets, input power plug NEMA L5-30P, Americas, Asia Pacific. Includes rear door and top fan tray.
H9A15-MD	240 V dual 16 A controller, each with 12 IEC C13 outlets, input power plug IEC 309, 16A, Europe. Includes rear door and top fan tray.

Rear Cabinet Extender

Selection of a Rear Cabinet Extender is **mandatory** for each H9A10 or H9A15 Cabinet.

H9C10-TE	Rear Cabinet Extender, Top Gun Blue, for H9A10-MC/MD cabinets
H9C15-TE	Rear Cabinet Extender, Top Gun Blue, for H9A15-MC/MD cabinets

Cabinet Front Door

H9C10-TF	Front door, Top Gun Blue, for H9A10-MC/MD Cabinet Enclosure
H9C15-TF	Front door, Top Gun Blue, for H9A15-MC/MD Cabinet Enclosure

Factory Integration

YS-ASCAA-AA	Factory Integration of systems and storage devices assembled and configured in cabinet enclosure in predefined locations

Ballast Kit

Ballast is added to a cabinet at specific locations for specific configurations to meet safety regulations for installation, operation, and service. See Cabinet Configuration Chart.

H9C10-MC	Two 35-40 lbs. steel plates

Shelves supported in M-series Cabinets

BA36R-RC	UltraSCSI single-ended RETMA rack, single-bus personality module, 180 W power supply
BA36R-RD	UltraSCSI single-ended RETMA rack, split-bus personality module, 180 W power supply
BA35R-MR	Rackmount StorageWorks controller shelf with RETMA mounting kit, and NEMA power for H9A10-MC/H9A15-MC cabinet, North America, Asia Pacific. Order BN30B-02 for mounting in H9A10-MD/H9A15-MD cabinet (Europe).
CK-BA35X-HH	180 W power supply, includes 120 V North American and 240V IEC power cord

Compaq CustomSystems Support

Cabinets containing systems and storage must be assembled by qualified assemblers: Compaq Manufacturing, Compaq CustomSystems Group, or an authorized Compaq Certified Integration Partner.

For custom integration of systems, options, cabinet expansion offerings, and additional Compaq and third party devices, or for other cabinets, doors, and trim kits of a different color, contact Compaq CustomSystems at 1-800-AT COMPAQ, or your local authorized Compaq Certified Integration Partner.

Step 2—Additional CPU Modules

- AlphaServer ES40 systems include one 6/500 MHz CPU, three additional CPUs are supported.

Note: Power supply included with system supports two CPUs. See Step 2a for Additional Power Supply information.

KN610-AB	SMP upgrade includes one 6/500 CPU with 4 MB cache and Tru64 UNIX SMP license
KN610-AC	SMP upgrade includes one 6/500 CPU with 4 MB cache and OpenVMS SMP license

Step 2a—Additional Power Supply

- Power supply included with System provides support for two CPUs and one Disk Drive Cage.
- Third and fourth CPUs, and/or second Disk Drive Cage require an additional power supply.
- Each additional power supply ordered with a Tower system requires an additional power cord, see Step 9.

H7906-A9 AlphaServer ES40 power supply

AlphaServer ES40	
1st power supply (included)	Supports up to 2 CPUs and one Disk Drive Cage
2nd power supply	Supports 3rd and 4th CPU, and second Disk Drive Cage, **or** Provides N+1 for up to 2 CPUs and one Disk Drive Cage
3rd power supply	Provides full N+1 redundancy

For Cabinet system configurations that require a third power distribution unit (H7600-xx), contact Compaq CustomSystems at 1-800-AT-COMPAQ (1-800-282-6672).

Step 3—Memory

- System includes one memory option.
- AlphaServer ES40 Model 1 systems support up to three additional memory options (total of 16 DIMMs)
- AlphaServer ES40 Model 2 systems support up to seven additional memory options (total of 32 DIMMs)
- Memory performance considerations: Interleaved operations reduce the average latency and increase the memory throughput over non-interleaved operations. With 1 memory option (4 DIMMs) installed, memory interleaving will not occur. With 2 memory options (8DIMMs) installed, memory read-write operations are two-way interleaved. With 4 memory options (16 DIMMs) installed, memory read-write operations are four-way interleaved, maximizing memory throughput.

MS610-BA	256 MB memory option (4 x 64 MB DIMMs)
MS610-CA	512 MB memory option (4 x 128 MB DIMMs)
MS610-DA	1 GB memory option (4 x 256 MB DIMMs)

Step 4—Internal Storage

System supports a total of four internal removable media devices.

- One dedicated diskette drive slot (1.44 MB diskette drive included).
- One 5.25” removable media slot (600 MB 32X CD-ROM included).
- Two additional 5.25” half-height removable media slots provide support for two 5.25” half-height, or one 5.25” full-height removable media devices.

Note: A single-ended UltraSCSI adapter (KZPBA-CA) and a SCSI cable (BN46L-01) are required to support additional internal removable media devices ordered.

Internal Removable media

RRD47-VD	600 MB 32X CD-ROM drive (RRD47) 5.25” half-height Top Gun Blue
TLZ10-LB	12/24 GB 4 mm DAT SCSI tape drive (TLZ10) 5.25” half-height Top Gun Blue
BN46L-01	SCSI cable with three connectors and an active terminator

Step 4—Internal Storage *(continued)*

Disk Drive Cage

- System supports up to two Disk Drive Cages.
- Each Disk Drive Cage supports four 3.5-inch x 1.6-inch hard disk drives and includes a one-port Ultra2 SCSI single-ended adapter—Ultra2 SCSI adapter uses one system PCI slot. Included Ultra2 SCSI adapter is the **only** adapter supported on the BA610-4D Disk Drive Cage.

BA610-4D	Four bay Disk Drive Cage with Ultra2 SCSI adapter and cable

Disk Drives—Supported in Disk Drive Cage

DS-RZ2DD-16	9.1 GB 10000 RPM Ultra2 SCSI drive
DS-RZ2ED-16	18.2 GB 10000 RPM Ultra2 SCSI drive

Step 5—External Storage

UltraSCSI Configuration Rules

- UltraSCSI configurations require UltraSCSI components (controllers, adapters, shelves, disks, and cables).
- UltraSCSI adapters and RAID controllers support UltraSCSI disks at UltraSCSI speeds in UltraSCSI Top Gun Blue shelves (DS-BA356-xx).
- UltraSCSI and Fast10 drives can be mixed in DS-BA356 Top Gun Blue UltraSCSI shelf. UltraSCSI adapter negotiates maximum transfer speed of drives.

UltraSCSI Connectors and Cables

- KZPBA-CA PCI one port UltraSCSI Single-ended adapter, 68HD connector, requires BN38C cable (2 to 20 m) to connect to Single-ended UltraSCSI shelf.
- KZPBA-CB PCI one port UltraSCSI Differential adapter, 68HD connector, requires BN38C cable (2 to 25 m) to connect to Differential UltraSCSI shelf or external RAID array controller.
- KZPAC-AA/CA/CB RAID controller, VHDCI connector, require BN37A cable (.3 to 20 m) to connect to Single-ended UltraSCSI shelf.
- KZPCM-DA PCI two port UltraSCSI Single-ended adapter and 10/100M-bit Ethernet Combo adapter. Internal 68-pin and 50-pin HD connectors and two external 68-pin VHDCI connectors, require BN37A cable (.3 to 20 m) to connect to Single-ended UltraSCSI shelf.

BN38C VHDCI to 68HD Cables—KZPBA UltraSCSI adapter to UltraSCSI shelf

BN38C-xx	VHDCI male to 68HD male. xx=2, 3, 5, 10, and 20 meter lengths

Note: Use BN38C-02 when connecting to UltraSCSI shelf in BA61P-PA/PB Pedestal enclosure.

BN37A VHDCI to VHDCI Cables—KZPAC RAID controller and KZPCM UltraSCSI adapter to UltraSCSI shelf

BN37A-02	2.0 m VHDCI male to VHDCI male
BN37A-2E	2.5 m VHDCI male to VHDCI male
BN37A-xx	3.0 m VHDCI male to VHDCI male. xx=3, 5, 10, 15, 20, and 25 meter lengths

Note: Use BN37A-02 when connecting to UltraSCSI shelf in BA61P-PA/PB Pedestal enclosure.

Step 5—External Storage *(continued)*

UltraSCSI StorageWorks Pedestals

UltraSCSI Top Gun Blue pedestals provide support for UltraSCSI disk drives. Pedestal is available in single-bus or split-bus configurations, and includes a personality module and 180 W power supply.

UltraSCSI shelf supports:

- Seven 3.5-inch hard disk drives, or
- One 5.25-inch device and four 3.5-inch hard disk drives, or
- Two 5.25-inch devices and one 3.5-inch hard disk drive.

Note: Installation of redundant power supply reduces number of 3.5” drive slots by one.

UltraSCSI StorageWorks Pedestals

DS-BA356-KF	UltraSCSI single-ended pedestal, single-bus personality module, 180 W power supply
DS-BA356-KG	UltraSCSI single-ended pedestal, split-bus personality module, 180 W power supply
DS-BA356-KH	UltraSCSI pedestal, single channel differential personality module, 180 W power supply
CK-BA35X-HH	180 W power supply, includes 120 V North American and 240V IEC power cord

Tabletop Tape Drives

DS-TLZ10-DB[1]	12/24 GB 4 mm DAT narrow single-ended tabletop SCSI tape, includes 120 V North American power cord, requires BN31W-xx SCSI cable
DS-TZ89N-TA[1]	35/70 GB DLT single-ended tabletop tape drive, requires BN21K-xx SCSI cable
TZK11-DA[1]	2.0 GB QIC tabletop tape drive, includes 3 ft. SCSI cable
DS-TZS20-DB[1]	25/50 GB 8mm AIT SCSI tabletop tape drive, 120 V North American power cord, requires BN31W-xx SCSI cable

1. A single-ended UltraSCSI adapter is required, and a country-specific power cord.

Step 5a—Storage Controllers—For External StorageWorks Shelves

Note: These controllers are not supported on the BA610-4D Disk Drive Cage.

Minimum level of operating system supported		Maximum # Supported	
Order Number	**Description**	**Tru64 UNIX V4.0F**	**OpenVMS V7.1-2**
KZPCM-DA	PCI-based two port UltraSCSI Single-ended adapter and 10/100Mbit Ethernet Combo adapter, uses 1 PCI slot. Internal 68-pin and 50-pin HD connectors and two external 68-pin VHDCI SCSI connectors.	4	4
BN37A-xx	VHDCI male to VHDCI male UltraSCSI cable; required for each external UltraSCSI shelf attached to KZPCM.		
KZPBA-CA	PCI-based one port UltraSCSI Single-ended adapter, uses 1 PCI slot. Internal 68-pin and 50-pin HD connectors and external 68-pin HD connector.	5	5
KZPBA-CB	PCI-based one port UltraSCSI Differential adapter, uses 1 PCI slot, external 68-pin HD connector.	5	5
BN38C-xx	68-pin HD male to VHDCI male UltraSCSI cable; required for each external UltraSCSI shelf attached to KZPBA-CA/CB adapter.		
KZPAC-AA[1]	PCI-based one port UltraSCSI RAID controller with 4 MB cache memory, includes RAID Array 230/Plus Subsystem software and documentation kit. VHDCI female connector. Tape drives are not supported.	4	4

Step 5a—Storage Controllers—For External StorageWorks Shelves *(continued)*

Minimum level of operating system supported		Maximum # Supported	
Order Number	**Description**	**Tru64 UNIX V4.0F**	**OpenVMS V7.1-2**
KZPAC-CA[1,2]	PCI-based three port UltraSCSI RAID controller with 4 MB cache memory, includes RAID Array 230/Plus Subsystem Software and documentation kit. Tape drives are not supported. SCSI cable is required for each active port. Requires BN31K-0E for external third port connection.	4	4
KZPAC-CB[1,2]	Same as KZPAC-CA with 8 MB cache memory	4	4
KZPSC-UB	Cache battery backup for KZPAC controller		
BN37A-xx	VHDCI male to VHDCI male UltraSCSI cable; required for each external UltraSCSI StorageWorks shelf attached to KZPAC. Note: Manufacturing may substitute BN37A-02 cable for certain cabinet configurations		
BN31K-0E[3]	SCSI cable/bulkhead assembly kit with KZPAC-CA/CB, allows external connection of one third port.		
KZPAC-SB[4]	SCSI cable/bulkhead assembly kit with two ports for KZPAC-CA/CB, allows external connection of two third ports.		

1. 18.2 GB disk drives are not supported on KZPAC-xx RAID controllers.
2. KZPAC RAID Controllers support 9 GB Drives—for configuration information on the 32 GB Logical Drive Limit of the KZPAC, see the Systems and Option Catalog file for Storage RAID Controllers, or http://webir.das.dec.com/info/CU5911/CU5911HM.HTM
3. SCSI cable/bulkhead assembly kit supports one third port connection from KZPAC-CA/CB, allows external connection of one third port.
4. SCSI cable/bulkhead assembly kit supports two third port connections from KZPAC-CA/CB, allows external connection of two third ports.

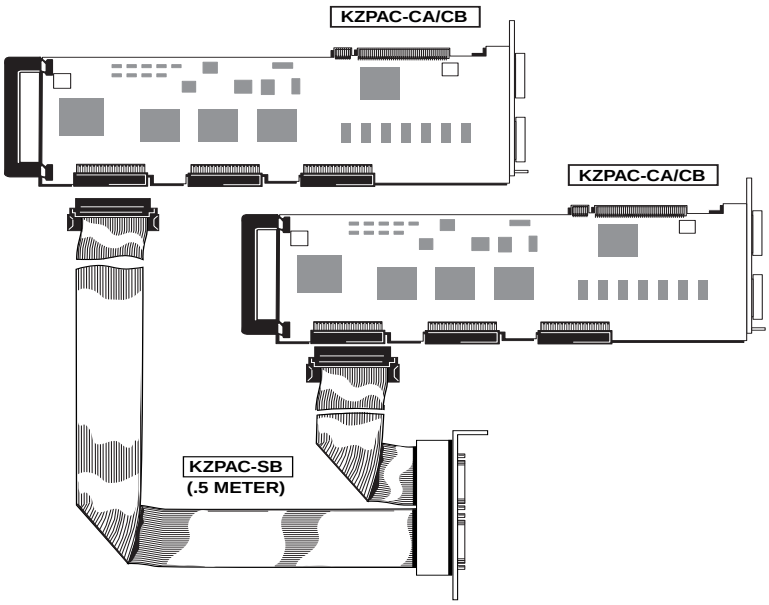

		Maximum # Supported	
Order Number	**Description**	**Tru64 UNIX V4.0F**	**OpenVMS V7.1-2**
CIPCA-BA	PCI-based CI adapter (OpenVMS systems only). Requires two PCI slots and CI cable for each adapter	—	2
BNCIA-xx	CI cable		

Step 5a—Storage Controllers—For External StorageWorks Shelves *(continued)*

Removable Media Devices for External StorageWorks Shelves

TZK11-VA	2.0 GB QIC tape drive in 5.25” StorageWorks carrier
DS-TZS20-VW	25/50 GB 8mm AIT SCSI tape drive in 3.5” StorageWorks carrier
DS-TLZ10-VA	12/24 GB 4 mm DAT narrow SCSI tape drive in StorageWorks carrier
DS-TZ89N-VW	35/70 GB DLT single-ended tape drive in StorageWorks carrier
DS-TL890-NE[1]	DLT Mini-Library Expansion unit with bar code reader, 16 cartridge, wide differential SCSI robotic controller with 68-pin HD female SCSI connector, universal mounting rails (Metric/RETMA), Top Gun Blue
DS-TL891-NE[1]	10 slot Rackmount mini library with one TZ89N-AV, Interlock Kit required (2T-TL891-SL), 68-pin HD female SCSI connector. Requires differential controller.
BN30B-02	CABLE ASSY,PWR,CORD,3 COND,SPT-2,18AWG,STRGHT C13 TO STRGHT C14, 2.5M,GRAY
DS-RRD47-VA	600 MB 32X CD-ROM drive in StorageWorks carrier

1.For maximum performance, tape libraries must be configured with Fast Wide Differential (FWD) controllers for tape backup.

Step 5b—External Storage Controllers

CI Controllers

- Supported on OpenVMS systems only.
- Requires CIPCA-BA Storage controller, BA35R-MR controller shelf, and the appropriate BNCIA-** cables.
- QB-5C4AA-SA software kit required for each CI controller (i.e., 1 per HSJ50, 2 per HSJ52)

HSJ50-AF	StorageWorks 6 channel CI Array controller 32 MB writeback cache and external cache battery
HSJ50-AH	StorageWorks 6 channel CI Array controller 64 MB cache and external cache battery
HSJ50-AJ	StorageWorks 6 channel CI Array controller 128MB cache and external cache battery
HSJ52-AF	StorageWorks Dual 6 channel CI Array controller 64 MB cache and dual external cache battery
HSJ52-AH	StorageWorks Dual 6 channel CI Array controller 128 MB cache and dual external cache battery
HSJ52-AJ	StorageWorks Dual 6 channel CI Array controller 256MB cache and dual external cache battery
HSJ54-AJ	StorageWorks Quad 6 channel CI Array controller 512MB cache and two dual external cache batteries

Controller Accessories

BA35R-MR	Rackmount StorageWorks controller shelf with RETMA mounting kit, and NEMA power for H9A10-MC/ H9A15-MC Cabinet, Americas, Asia Pacific. Order BN30B-02 for mounting in H9A10-MD/ H9A15-MD cabinet (Europe)
BN30B-02	IEC to IEC power cord (Gray) for BA35R-MR self mounted in H9A1x-MD Cabinet (Europe)
BN35S-02	IEC to IEC power cord (Black) for BA35R-MR shelf mounted in H9A1x-MD Cabinet (Europe)
BA35X-HF	Power supply for N+1 redundant support in UltraSCSI StorageWorks controller shelf
SC008-AC	Star Coupler Passive Hub device, supports eight CI ports

Step 5c—UltraSCSI RAID Array Controllers and UltraSCSI RAID Packaged Solutions

BA370 Rackmounted Enclosure

- Mandatory Rear Cabinet Extender ordered for systems installed in M-series cabinets (H9A10 and H9A15) allows two BA370 enclosures to be installed front to back in cabinet.
- Host Adapter, RAID Array controller, platform specific Solutions Software Kit, and disk drives must be ordered separately. See StorageWorks Chapter of Compaq *Systems and Options Catalog.*

2T-BA370-AS	**BA370 Front mount rackmount enclosure** with five 180 W power supplies, includes RETMA rackmount kit. First BA370 enclosure must be front mounted in cabinet, 20U height

2T-BA370-AR	**BA370 Rear mount rackmount enclosure** with five 180 W power supplies, includes RETMA rackmount kit. Second BA370 enclosure must be rear mounted in cabinet, 20U height

Step 5c—UltraSCSI RAID Array Controllers and UltraSCSI RAID Packaged Solutions *(continued)*

ESA 10000 Storage Arrays and RAID Array 7000 (RA7000) Options

- ESA 10000 Storage Arrays and RAID Array 7000 (HSZ70 Product Set) are supported on AlphaServer ES40 systems
- The HSZ70 is supported on KZPBA-CB UltraSCSI differential controller.

See StorageWorks Packaged Solutions in StorageWorks Chapter of Compaq *Systems and Options Catalog*, or on the WEB at http://www.digital.com/info/SOHOME/ for additional configuration information on HSZ70 controllers in Enterprise Storage Array 10000 and RAID Array 7000.

Step 6—Monitors

RAID Configuration Utility is accessible via the console port for Tru64 UNIX and OpenVMS systems. Optional graphics capability is available.

Graphics monitors other than those listed below can be used if compatible with SVGA graphics ordered with a system.

Note: Selection of a video extension cable and a country specific power cord is mandatory for all monitor variants.
See Step 6a for video extension cable
See Step 6b for country specific power cords

3R-VRQV5-24/11	15" (13.8" viewable image size) Corporate Series auto-scan color monitor, flat square Invar CRT, 0.28 mm dot pitch, VGA to 1024 x 768 @ 85 Hz, TCO 95, MPRII, Energy Star, attached 1.8 meter video cable. Requires mandatory selection of video extension cable and country specific power cord for all variants. –24 = Northern Hemisphere without power cord –11 = Southern Hemisphere without power cord
SN-VRQP7-24/23	17” (16.0” viewable image size) professional series auto-scanning color monitor, Trinitron CRT, 0.25 mm aperture grill pitch, VGA to 1280 x 1024 at 75 Hz, TCO 95, MPR-II, Energy Star, attached 1.8 meter video cable. Requires mandatory selection of video extension cable and country specific power cord for all variants. –24 = Northern Hemisphere without power cord –23 = Southern Hemisphere without power cord
SN-VRQP1-24/23	21" (19.6" viewable image size) auto-scanning color monitor, Trinitron CRT, 0.25 mm aperture grill pitch, VGA to 1600 x 1200 at 75 Hz NI, TCO 95, Energy Star, includes a 1.8 meter video cable. Requires mandatory selection of video extension cable and country specific power cord for all variants. –24 = Northern Hemisphere without power cord –23 = Southern Hemisphere without power cord

Step 6a—Video Extension Cable

BN39C-02	1.8 meter video extension cable—mandatory for each monitor ordered

Step 6b—Monitor Power Cords

BN26J-1K	North American, 120 V, 75 inches long
3X-BN46F-02	Japan, 2.5 m long
BN19H-2E	Australia, New Zealand, 2.5m long
BN19C-2E	Central Europe, 2.5 m long
BN19A-2E	UK, Ireland, 2.5 m long
BN19E-2E	Switzerland, 2.5 m long
BN19K-2E	Denmark, 2.5 m long
BN19M-2E	Italy, 2.5 m long
BN19S-2E	Egypt, India, South Africa, 2.5 m long
BN18L-2E	Israel, 2.5 m long

Step 7—Graphics Adapters

- RAID Configuration Utility is accessible via the console port for Tru64 UNIX and OpenVMS systems. Optional graphics capability is available.
- Select graphics adapter, monitor, and country specific keyboard for Tru64 UNIX and OpenVMS systems if required.
- System supports maximum of one graphics adapter.

SN-PBXGK-BB ELSA GLoria Synergy graphics with 8 MB SGRAM 1600 x 1200, 2D/3D graphic accelerator

Step 8—Networks and Communications

		Maximum # Supported	
Order Number	**Description**	**Tru64 UNIX V4.0F**	**OpenVMS V7.1-2**
DE500-BA	PCI-based 10/100-Mbit 1 port Fast Ethernet controller (Twisted Pair)	4	4
DE504-BA	PCI-based 10/100-Mbit 4 Port Fast Ethernet controller (Twisted Pair)	1	1
BN25G-xx	Cable for 10BaseT Twisted Pair connection		
DEGPA-SA[1]	PCI-based Gigabit Ethernet adapter, SC connectors, MMF	2	2
DE500-FA	PCI-based 10/100-Mbit Fast Ethernet controller, MMF	4	4
BN34B-xx	SC-SC dual fiber optic cable, xx = length in meters		
DEFPA-AB	PCI-based FDDI Adapter, single attachment station (SAS), multi-mode fiber (MMF), SC connector	4	4
DEFPA-DB	PCI-based FDDI Adapter, DAS, MMF, SC connector	4	4
BN34D-xx	MIC-SC dual fiber optic cable		
BN34B-xx	SC to SC dual fiber optic cable		
DEFPA-UB	PCI-based FDDI Adapter, SAS, TP-PMD, requires BN25H-03	4	4
DEFPA-MB	PCI-based FDDI Dual Adapter, DAS, TP-PMD, requires BN25H-03	4	4
BN25H-03	3 m (9.8 ft.) FDDI crossover cable		
PBXDA-AA	PCI-based 4 Port Asynchronous Controller, cable included	2	2
PBXDA-AB	PCI-based 8 Port Asynchronous Controller, cable included	2	2
PBXDA-AC	PCI-based 16 Port Asynchronous Controller, cable included	2	2
3X-DAPBA-FA	PCI to ATM155 MBIT Adapter - Fiber	6	-
3X-DAPCA-FA	PCI to ATM622 MBIT Adapter - Fiber	4	-
CXI01-AB **CXI01-AC** **CXI01-AF**	Asynchronous multiport MUX expander XEM Asynchronous MUX cable converter (RJ45-DB25) Asynchronous MUX adapter (RJ45-MJ11), 8 pack		

1 No boot support on Gigabit Ethernet adapter.

MEMORY CHANNEL Controller

Tru64 UNIX Systems

- Minimum of Tru64 UNIX V4.0F with TCR 1.6 or later.
- Each system node in the cluster requires a TruCluster Production Server (QB-3RLAG-KA)or TruCluster Memory Channel software license (QB-4ZCAG-AA).
- NOTE: TruCluster Memory Channel license (QB-4ZCAG-AA), normally used for HPTC applications is not required if the systems have a TruCluster Production Server license (QB-3RLAG-KA).

OpenVMS Systems

- Requires OpenVMS V7.1-2 or later and OpenVMS Cluster license (QL-MUZAG-AA).

Configuring Information:

* Up to two PCI to System Area Network adapters (CCMAB-AA) are supported in a single system.

* Two node clusters can be configured by ordering a CCMAB-AA for each system and one BN29B-04 or BN29B-10 cable. The cable connects directly to the CCMAB-AA in each system.

* For three or four system nodes, order one CCMAB-AA adapter, one BN29B-04 or BN29B-10 cable and one CCMHB-AA. Make connections from the CCMAB-AA in a system to the CCMHB-AA.

* The CCMHB-AA includes four CCMLB-AA line cards and supports up to four nodes. Expansion up to eight system nodes can be achieved by adding up to four additional CCMLB-AA line cards.

* If two CCMAB-AA's are configured in each system, a second CCMHB-AA is required for three or more nodes. In two node clusters the CCMAB-AA's may be directly connected.

- In cases where nodes must be separated by a longer distance than standard copper cables allow, the CCMFB option converts the output of the standard CCMAB controller or CCMLB line card to single-mode fiber optic cable. The fiber optic connection may be up to 2,000 meters long between two CCMAB controllers connected in virtual hub mode, or 3,000 meters between a CCMAB controller and a CCMHB hub. (The connection from the CCMHB hub to a second system may also be 3,000 meters). The CCMFB option requires a second PCI slot in the system from which it draws power only. It is normally connected to the corresponding CCMAB controller with the short BN39B-01 cable. The CCMFB is also used in the CCMHB hub where it occupies a slot normally used by the CCMLB line card, limiting expansion to four radial fiber optic connections. The CCMHB-BA hub expansion box provides additional slots for up to eight fiber optic connections. Two standard length single-mode fiber optic cables are available from Compaq (BN34R-10 and BN34R-31) however, users normally provide this fiber optic connection. Fiber optic connectivity is completely transparent to the systems using it and has no performance impact.

MEMORY CHANNEL Controller

CCMAB-AA	PCI System Area Network Controller —maximum two supported
CCMHB-AA	System Area Network Hub with four line cards. Includes BN19P-2E power cord for Canada, Japan and US operations. For other regions, order appropriate power cord from list below.
CCMHB-BA	Hub expansion box with no line cards
CCMLB-AA	Expansion line card for CCMHB hub.
BN39B-01	1-meter cable for CCMAB and CCMHB
BN39B-04	4-meter cable for CCMAB and CCMHB
BN39B-10	10-meter cable for CCMAB and CCMHB
CCMFB-AA	Copper-to-single mode fiber optic converter
QB-3RLAQ-AA	TruCluster Production Server Software for Tru64 UNIX
QB-4ZCAQ-AA	Tru64 UNIX Driver for MEMORY CHANNEL license
QL-MUZAQ-AA	OpenVMS Cluster license for Alpha systems

CCMHB-AA, MEMORY CHANNEL Hub, includes BN19P-2E line cord for Canada, Japan, US operation.
For other regions, order one of the following:

BN19A-2E	Ireland, United Kingdom
BN19S-2E	Egypt, India
BN19C-2E	Central Europe
BN18L-2E	Israel
BN19E-2E	Switzerland
BN19M-2E	Italy
BN19K-2E	Denmark
BN19H-2E	Australia, New Zealand

Step 9—Keyboards, Power Cords, and Documentation

Systems ordered in North America include U.S. English keyboard. Selection of a country-specific keyboard is mandatory for all non-North American orders.

Tru64 UNIX Keyboard	OpenVMS Keyboard	Country
SN-LKQ47-AA	**LK461-A2**	US/English
SN-LKQ47-AB	**LK461-AB**	Belgian
SN-LKQ47-AC	**LK461-AC**	Canadian/French
SN-LKQ47-AD	**LK461-AD**	Danish
SN-LKQ47-AE		UK
SN-LKQ47-AF	**LK461-AF**	Finnish
SN-LKQ47-AG	**LK461-AG**	German
SN-LKQ47-AH	**LK461-AH**	Dutch
SN-LKQ47-AI	**LK461-AI**	Italian
SN-LKQ47-AK	**LK461-AK**	Swiss/French
	LK461-AL	Swiss/German
SN-LKQ47-AM	**LK461-AM**	Swedish
SN-LKQ47-AN	**LK461-AN**	Norwegian
SN-LKQ47-AP	**LK461-AP**	French
	LK461-AQ	Canadian/English
SN-LKQ47-AR		Latin-American
SN-LKQ47-AS	**LK461-AS**	Spanish
SN-LKQ47-AT	**LK461-AT**	Hebrew
SN-LKQ47-AV	**LK461-AV**	Portuguese
SN-LKQ47-AX		BHCSY
SN-LKQ47-BA		International
SN-LKQ47-BH	**LK461-BH**	Greek
SN-LKQ47-BI		Taiwanese
SN-LKQ47-BK		Korean
	LK461-BL	Romanian
SN-LKQ47-BP	**LK461-BP**	Polish
SN-LKQ47-BQ	**LK461-BQ**	Hungarian
SN-LKQ47-BR		Arabic
SN-LKQ47-BT	**LK461-BT**	Cyrillic
SN-LKQ47-BU	**LK461-BU**	Turkish
SN-LKQ47-BV	**LK461-BV**	Czech
	LK461-BW	Turkish-French
	LK461-BY	Yugoslavian
SN-LKQ47-CB		Thai
SN-LKQ47-CV		S. Chinese
SN-LKQ47-CZ	**LK461-CZ**	Slovak

Tower Power Cords

- Tower enclosure ordered in North America includes a 120 V power cord. Selection of a country-specific power cord is mandatory for all non-North American orders.
- Each additional power supply ordered with a system installed in a Tower enclosure requires an additional power cord.

Pedestal Power Cords

- Pedestal systems ordered in North America include two 120 V power cords. Selection of two country-specific power cords is mandatory for all non-North American orders.

BN26J-1K	North American 120 V, 75 inches long
3X-BN46F-02	Japan, 2.5 m long
BN19H-2E	Australia, New Zealand, 2.5 m long
BN19C-2E	Central Europe, 2.5 m long

BN19A-2E	UK, Ireland, 2.5 m long
BN19E-2E	Switzerland, 2.5 m long
BN19K-2E	Denmark, 2.5 m long
BN19M-2E	Italy, 2.5 m long
BN19S-2E	Egypt, India, South Africa, 2.5 m long
BN18L-2E	Israel, 2.5 m long

Documentation

QZ-01BAA-GZ	Additional AlphaServer ES40 System Information Kit (print and CD), Owners Guide, User Interface Guide, and Release Notes

Step 10—Printers and Remote Console

Systems include two full duplex asynchronous serial ports and one bi-directional enhanced parallel port.

Asynchronous serial ports have 9-pin D-subminiature connectors. A 9-pin to MMJ adapter (H8571-J) is required for each connection. See printer section of *Systems and Options Catalog* for serial and parallel printer information.

Step 10a—Console Terminal

- RAID Configuration Utility is accessible via the console port for Tru64 UNIX and OpenVMS systems.
- Console terminal with EIA-232 25-pin DSUB connector required unless otherwise available.
- Shielded console cable is required for console terminal unless available onsite.

VT510-xx	VT510 terminal

Step 11—Upgrade Kit

- Compaq AlphaServer ES40 Model 1 systems ship with 6 PCI I/O slots and support for 4 memory options.
- Order an Upgrade Kit to convert an AlphaServer ES40 Model 1 to a Model 2 system with 10 PCI I/O slots and support for 8 memory options.

Order Number	From	To
3X-KFPPA-AA	AlphaServer ES40 Model 1 with support for 6 I/O slots, and 4 memory options	AlphaServer ES40 Model 2 with support for 10 I/O slots, and 8 memory options

Step 12—Software

Tru64 UNIX

Software Processor Code = E

- Tru64 UNIX Packaged systems include Tru64 UNIX Traditional Unlimited User license, Server Extension, and Internet AlphaServer Software kit.
- Tru64 UNIX Packaged systems require operating system media and documentation for first system on site.

Tru64 UNIX Media and Documentation—required for first system on site

QA-MT4AA-H8	Tru64 UNIX media and online documentation on CD-ROM
QA-MT4AA-GZ	Tru64 UNIX full hard copy documentation

StorageWorks Software Packages for Tru64 UNIX

QB-5RXAE-AA	StorageWorks Software Package, includes licenses for Logical Storage Manager and AdvFS Utilities

TruCluster Available Server

QL-05SAE-AA	TruCluster Available Server License

Step 12—Software *(continued)*

Advanced Server for Tru64 UNIX

QL-5U29M-3D	Advanced Server for Tru64 UNIX, 25 Client Concurrent Use License
QL-5U29M-3E	Advanced Server for Tru64 UNIX, 50 Client Concurrent Use License
QL-5U29M-3F	Advanced Server for Tru64 UNIX, 100 Client Concurrent Use License
QL-5U29M-3G	Advanced Server for Tru64 UNIX, 250 Client Concurrent Use License
QL-5U29M-3H	Advanced Server for Tru64 UNIX, 500 Client Concurrent Use License

Tru64 UNIX Layered Products CD-ROM

QA-054AA-H8	Layered products media and documentation for Tru64 UNIX on CD-ROM

DECnet for Tru64 UNIX

QL-MTJAE-AA	DECnet/OSI end-system license for Tru64 UNIX
QL-MTKAE-AA	DECnet/OSI extended function license for Tru64 UNIX

OpenVMS

Software Processor Code = E

OpenVMS Concurrent Use Licenses are **not** specific to a single system and can be moved between systems at user discretion. OpenVMS Concurrent Use Licenses can also be shared in a mixed OpenVMS VAX and OpenVMS Alpha Cluster.

OpenVMS Concurrent Use Licenses

QL-MT3AA-3B	OpenVMS Concurrent Use 1-user license
QL-MT3AA-3C	OpenVMS Concurrent Use 2-user license
QL-MT3AA-3D	OpenVMS Concurrent Use 4-user license
QL-MT3AA-3E	OpenVMS Concurrent Use 8-user license
QL-MT3AA-3F	OpenVMS Concurrent Use 16-user license
QL-MT3AA-3G	OpenVMS Concurrent Use 32-user license
QL-MT3AA-3H	OpenVMS Concurrent Use 64-user license
QL-MT3AA-3J	OpenVMS Concurrent Use 128-user license
QL-MT3AA-3K	OpenVMS Concurrent Use 256-user license
QL-MT2AE-AA	OpenVMS Traditional unlimited user license

OpenVMS Media and Documentation—required for first system on site

QA-MT1AA-H8	OpenVMS media and online documentation CD-ROM
QA-001AA-GZ	OpenVMS hard copy documentation

OpenVMS Layered Products CD-ROM

QA-03XAA-H8*	Layered products media and documentation for OpenVMS on CD-ROM

* Includes DIGITAL Enterprise Integration Server for OpenVMS media and documentation.

DIGITAL Enterprise Integration Package

QA-5LVAA-H8	DIGITAL Enterprise Integration Server for OpenVMS media and documentation

Step 12—Software *(continued)*

Optional OpenVMS Licenses

QL-MTGAE-AA	DECnet extended function license for OpenVMS
QL-MTHAE-AA	DECnet end-system to extended function upgrade license for OpenVMS
QL-MUZAE-AA	OpenVMS Cluster license for Alpha systems
QL-2A1AE-AA	OpenVMS Volume Shadowing license

Step 13—Hardware and Software Supplemental Support Services

Hardware—Americas and Asia Pacific only

- Systems include three-year hardware warranty, onsite with 5 x 9, 24-hour response time.
- Option order as part of the Initial System Sale take on the Warranty of the enclosure
- Options added after the Initial System Sale take on the Warranty of the enclosure until the enclosure warranty ends.
- All unique AlphaServer ES40 options have a minimum of 1 Year Return to Compaq Warranty.
- Select optional Hardware Supplemental Support Services if required.

Supplemental Service for Tower System with up to 1 GB of memory

FM-6A4HR-36	3 year 5 x 9, 4-hour response time
FM-6A4HR-60	5 year 5 x 9, 4-hour response time
FM-6A512-36	3 year 5 x 12, 4-hour response time
FM-6A512-60	5 year 5 x 12, 4-hour response time
FM-6A616-36	3 year 6 x 12, 4-hour response time
FM-6A616-60	5 year 6 x 12, 4-hour response time
FM-6A724-36	3 year 7 x 24, 4-hour response time
FM-6A724-60	5 year 7 x 24, 4-hour response time
FM-6AXHW-60	5 year 5 X 9, next day, onsite

Supplemental Service for Tower System with 1 to 3 GB of memory

FM-6B4HR-36	3 year 5 x 9, 4-hour response time
FM-6B4HR-60	5 year 5 x 9, 4-hour response time
FM-6B512-36	3 year 5 x 12, 4-hour response time
FM-6B512-60	5 year 5 x 12, 4-hour response time
FM-6B616-36	3 year 6 x 12, 4-hour response time
FM-6B616-60	5 year 6 x 12, 4-hour response time
FM-6B724-36	3 year 7 x 24, 4-hour response time
FM-6B724-60	5 year 7 x 24, 4-hour response time
FM-6BXHW-60	5 year 5 X 9, next day, onsite

Supplemental Service for Tower System with 3 to 5 GB of memory

FM-6C4HR-36	3 year 5 x 9, 4-hour response time
FM-6C4HR-60	5 year 5 x 9, 4-hour response time
FM-6C512-36	3 year 5 x 12, 4-hour response time
FM-6C512-60	5 year 5 x 12, 4-hour response time
FM-6C616-36	3 year 6 x 12, 4-hour response time
FM-6C616-60	5 year 6 x 12, 4-hour response time
FM-6C724-36	3 year 7 x 24, 4-hour response time
FM-6C724-60	5 year 7 x 24, 4-hour response time
FM-6CXHW-60	5 year 5 X 9, next day, onsite

Step 13—Hardware and Software Supplemental Support Services *(continued)*

Supplemental Service for Pedestal System with up to 1 GB memory

FM-6D4HR-36	3 year 5 x 9, 4-hour response time
FM-6D4HR-60	5 year 5 x 9, 4-hour response time
FM-6D512-36	3 year 5 x 12, 4-hour response time
FM-6D512-60	5 year 5 x 12, 4-hour response time
FM-6D616-36	3 year 6 x 12, 4-hour response time
FM-6D616-60	5 year 6 x 12, 4-hour response time
FM-6D724-36	3 year 7 x 24, 4-hour response time
FM-6D724-60	5 year 7 x 24, 4-hour response time
FM-6DXHW-60	5 year 5 X 9, next day, onsite

Supplemental Service for Pedestal System with 1 to 3 GB of memory

FM-6E4HR-36	3 year 5 x 9, 4-hour response time
FM-6E4HR-60	5 year 5 x 9, 4-hour response time
FM-6E512-36	3 year 5 x 12, 4-hour response time
FM-6E512-60	5 year 5 x 12, 4-hour response time
FM-6E616-36	3 year 6 x 12, 4-hour response time
FM-6E616-60	5 year 6 x 12, 4-hour response time
FM-6E724-36	3 year 7 x 24, 4-hour response time
FM-6E724-60	5 year 7 x 24, 4-hour response time
FM-6EXHW-60	5 year 5 X 9, next day, onsite

Supplemental Service for Pedestal System with 3 to 5 GB of memory

FM-6G4HR-36	3 year 5 x 9, 4-hour response time
FM-6G4HR-60	5 year 5 x 9, 4-hour response time
FM-6G512-36	3 year 5 x 12, 4-hour response time
FM-6G512-60	5 year 5 x 12, 4-hour response time
FM-6G616-36	3 year 6 x 12, 4-hour response time
FM-6G616-60	5 year 6 x 12, 4-hour response time
FM-6G724-36	3 year 7 x 24, 4-hour response time
FM-6G724-60	5 year 7 x 24, 4-hour response time
FM-6GXHW-60	5 year 5 X 9, next day, onsite

Supplemental Service for ES40 System with each additional GB of memory over 5 GB

FM-6R4HR-36	3 year 5 x 9, 4-hour response time
FM-6R4HR-60	5 year 5 x 9, 4-hour response time
FM-6R512-36	3 year 5 x 12, 4-hour response time
FM-6R512-60	5 year 5 x 12, 4-hour response time
FM-6R616-36	3 year 6 x 12, 4-hour response time
FM-6R616-60	5 year 6 x 12, 4-hour response time
FM-6R724-36	3 year 7 x 24, 4-hour response time
FM-6R724-60	5 year 7 x 24, 4-hour response time
FM-6RXHW-60	5 year 5 X 9, next day, onsite

Step 13—Hardware and Software Supplemental Support Services *(continued)*

Installation Services

FM-ESTWR-IN	Hardware product installation for AlphaServer ES40 Tower/Pedestal
FM-DRW-IN**	Hardware product installation for AlphaServer ES40 Drawer
FM-51MEM-IN	Add-on memory installation for AlphaServer ES40
FM-51CPU-IN	Add-on CPU installation for AlphaServer ES40

Software—Americas and Asia Pacific only

- Tru64 UNIX and OpenVMS Systems include 90-day Conformance to SPD and Telephone Advisory Support. Select optional Software Supplemental Support Services, if required.
- Software service upgrades for Tru64 UNIX includes advisory and remedial software support with new version license rights for operating system for time period indicated.
- Software service upgrades for OpenVMS include advisory and remedial software support with new version license rights for operating system and Enterprise Integration Package for time period indicated.
- Software service upgrades for SMP Upgrades running Tru64 UNIX or OpenVMS include new version license rights for Tru64 UNIX or OpenVMS SMP Upgrades for the time period indicated. (One required for **each** SMP Upgrade).

FM-62UN*-12	12-month Software Supplemental Support for Tru64 UNIX AlphaServer ES40 systems
FM-62UN*-36	36-month Software Supplemental Support for Tru64 UNIX AlphaServer ES40 systems
FM-62UN*-60	60-month Software Supplemental Support for Tru64 UNIX AlphaServer ES40 systems
FM-62VM*-12	12-month Software Supplemental Support for OpenVMS AlphaServer ES40 systems
FM-62VM*-36	36-month Software Supplemental Support for OpenVMS AlphaServer ES40 systems
FM-62VM*-60	60-month Software Supplemental Support for OpenVMS AlphaServer ES40 systems

* = 9 for Bronze Support 9 x 5
= S for Bronze plus Support 24 x 7
= N for Node Support

FM-62USM-**	Software Supplemental Support for Tru64 UNIX AlphaServer ES40 SMP
FM-62VSM-**	Software Supplemental Support for OpenVMS AlphaServer ES40 SMP

** = 12 for 1 year
= 36 for 3 years
= 60 for 5 years

Step 13a—Hardware and Software Supplemental Support Services (Europe only)

Europe does **not** have specific part numbers for Hardware and Software Supplemental Support Services. Prices are quoted based on worldwide service reference pricing, contact MCS Sales in your country for information on Hardware and Software Supplemental Support Services.

System Diagram

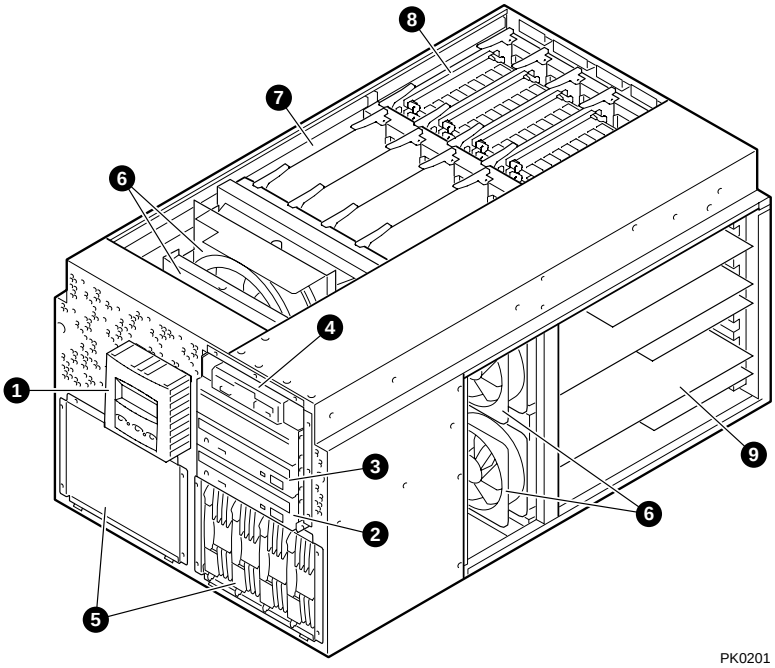

1. Control panel
2. CD-ROM drive
3. Removable media bays
4. Floppy diskette drive
5. Storage drive bays
6. Fans
7. CPUs
8. Memory
9. PCI cards

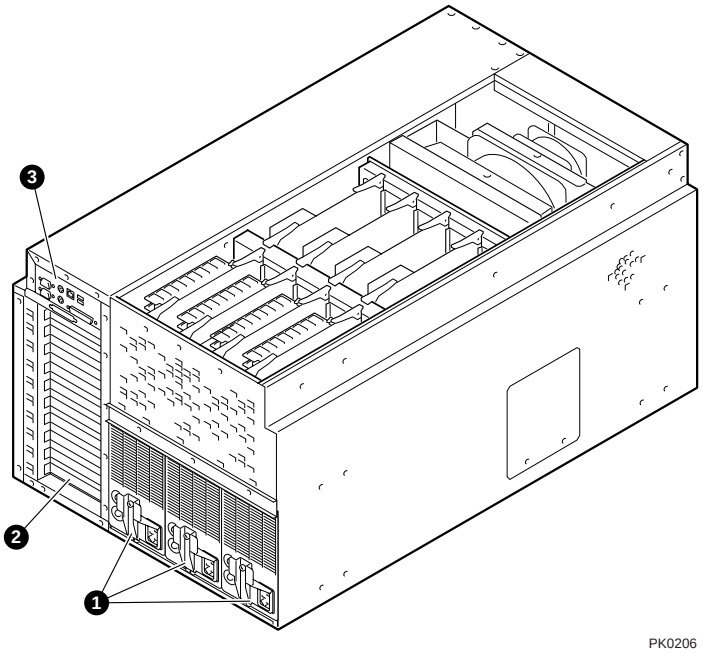

1. Power supplies
2. PCI bulkhead
3. I/O ports

System Diagram

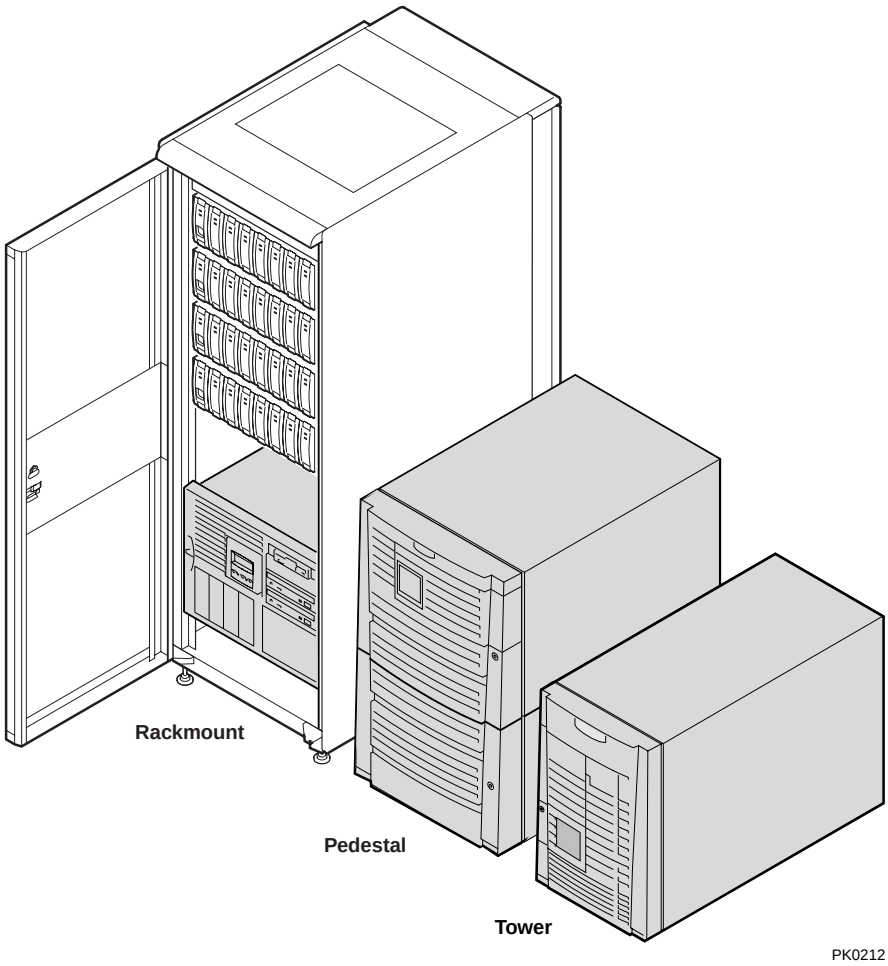

Tower Specifications

Dimensions—Tower		
Height	50.8 cm (20.0 in.)	
Width	38.7 cm (15.25 in.)	
Depth	78.7 cm (31.0 in.)	
Weight	65.6 kg (144.3 lb) Typical	
	96.7 kg (212.8 lb) Maximum	
Shipping Dimension—Tower		
Height	82.48 cm (32.2 in.)	
Width	60.2 cm (24.0 in.)	
Depth	101.6 cm (40.0 in.)	
Weight	78 kg (1720 lb) Typical	
	110 kg (242 lb) Maximum	
Clearances	**Operating**	**Service**
Front	75 cm (29.5 in.)	75 cm (29.5 in.)
Rear	15 cm (6 in.)	75 cm (29.5 in.)
Left side	None	75 cm (29.5 in.)
Right side	None	None

Pedestal Specifications

Dimensions—Pedestal		
Height	78.2 cm (30.8 in.)	
Width	50.8 cm (20.0 in.)	
Depth	80.6 cm (31.75 in.)	
Weight	127 kg (280 lb) Typical 159 kg (350 lb) Maximum	
Shipping Dimension—Pedestal		
Height	107.7 cm (42.4 in.)	
Width	100.3 cm (39.5 in.)	
Depth	60.7 cm (23.9 in.)	
Weight	Nominal: 149 kg (328 lb.), Maximum: 185 kg (407 lb.)	
Clearances	**Operating**	**Service**
Front	75 cm (29.5 in.)	75 cm (29.5 in.)
Rear	15 cm (6 in.)	75 cm (29.5 in.)
Left side	None	None
Right side	None	75 cm (29.5 in.)

Rackmount Specifications

Dimensions—Rackmount		
Height	35.2 cm (13.87 in.) Fits 14 in. [8U] standard RETMA cabinet	
Width	44.7 cm (17.6 in.)	
Depth	76.5 cm (30.1 in.)	
Weight		
When lifting	Nominal: 50 kg (110 lb.), Maximum 76 kg (167.2 lb.)	
Total added to cabinet (brackets, slides, & cables)	Nominal: 59 kg (130 lb.), Maximum 92 kg (202.4 lb.)	
Shipping Dimension—Rackmount		
Height	73.2 cm (28.8 in.)	
Width	60.7 cm (24.0 in.)	
Depth	101.6 cm (40.0 in.)	
Weight	Nominal: 72 kg (158 lb.), Maximum: 106 kg (233 lb.)	
Clearances	**Operating**	**Service**
	See requirements of specific cabinet	Minimum 121.9 cm (4 ft.) 76.3 cm (30 in.) withdrawal on rails

Cabinet Specifications

Cabinet Dimensions	H9A10 M-Series	H9A15 M-Series
Height	170 cm (67.0 in)	200 cm (79.0 in)
Width	60 cm (23.6 in) Rack	60 cm (23.6 in) Rack
Depth	110 cm (43.27 in)	90 cm (35.4 in)
Weight	Configuration dependent	450 kg (1000 lb)
Shipping Dimensions	**H9A10 M-Series**	**H9A15 M-Series**
Height	185.5 cm (73 in.)	216 cm (85 in.)
Width	91.5 cm (36 in.)	91.5 cm (36 in.)
Depth	122 cm (48 in.)	122 cm (48 in.)
Weight	Configuration dependent Maximum payload 1000 lb.	Normal: 550 kg (1056 lb) Maximum: 640 kg (1408 lb.)

ES40 System Specifications

Environmental		
Temperature	Operating*	
	Tower, Pedestal, Rackmount	10-35° C (50-95° F)
	Nonoperating	Not tested)
	Storage (60 days)	–40 to –66° C (-40 to –151° F)
	Rate of change	11° C/hr (20° F/hr)
Relative humidity	Operating	20–80%
	Nonoperating	20–80%
	Storage (60 days)	10–95%
	Rate of change	20% hr.
Maximum wet bulb temperature	Operating	28° C (82° F)
	Storage (60 days)	46° C (115°F)
Minimum dew point temperature	Operating	2° C (36° F)
	Storage (60 days)	Not tested
Heat dissipation	Nominal	Maximum
Tower and Rack	900 W, 3074 BTU/hr	1300 W, 4440 BTU/hr
Pedestal	1480 W, 5054 BTU/hr	2400 W, 8196 BTU/hr
H9A10/H9A15	Configuration dependent	4800 W, 16392 BTU/hr
Air flow and quality	Intake location	Front
	Exhaust location	Rear-Tower, Pedestal, Rack Rear/Top-H9A10/H9A15
	Particle size	N/A
	Concentration	N/A
Altitude	Operating†	3037 m (10,000 ft)
	Nonoperating	12192 m (40,000 ft)

Acoustics—Declared values per ISO 9296 and ISO 7779
Current values for specific configurations are available from Compaq. 1 B = 10 dBA

Acoustics	L_{WAd3} B	L_{pAm5} dBA (bystander position)
Idle	6.6	48
Operating	6.6	48
Vibration	Operating	10-500 Hz .1 G peak
	Nonoperating	1.03 Grms 5-300 Hz

Electrical—Power Supplies are universal, PFC, auto Ranging, 100/240 Vac			
Nominal voltage (Vac)	100	120	200-240
Voltage range (Vac) (temporary condition)	90-100	110-128	180-250
Power source phase	Single	Single	Single
Nominal frequency (Hz)	50/60	50/60	50/60
Frequency range (Hz)	49-51 / 59-61	49-51 / 59-61	49-51 / 59-61
RMS current (maximum steady state)			
Tower and Rackmount			
Single power cord	11.0 A	8.5 A	5.0 A
Multiple power cords	6.5 A	5.3 A	3.0 A
Maximum VA	1300	1270	1250
Pedestal			
Each power cord	12.0 A	10.5 A	6.0 A
Maximum VA	1960	1900	1880
M-Series Cabinet (config-dependent)			
Nominal voltage (VAC)	100	120	220-240
Each power cord	24 A	24 A	16 A

ES40 System Specifications

Power Cords			
System	Quantity	Power Cord Length	Type
Tower	Up to 3	190 cm (75 in.)	IEC 320 C13 to NEMA 5-15 (N. America) or IEC 320 C13 to country-specific
Pedestal	2	190 cm (75 in.)	120 V nonremovable NEMA 5-15 (N. America) or 200-240 V IEC 320 C13 to country-specific
Rackmount	3	452 cm 14 ft. 10 in.)	IEC 320 C13 to NEMA 5-15 (N. America) or IEC 320 C13 to IEC 320 C14 (other countries)
Cabinet	2	330 cm 10ft. 10 in.)	120 V nonremovable NEMA L5-30P or 200-240 V nonremovable IEC 309

Regulatory	
Agency approvals	UL: Listed to UL1950 (3rd edition) CSA: Certified to CAN/CSA-C22.2 No. 950-M95 TUV: EN 60950/A4: 1997 VDE 0805 GS marked FCC: Part 15.B Class A CE: EN55022, EN50082 VCCI Class II ITE BCIQ: CISPR22, CNS13438 C-Tick: CISPR22, AS/NZS 3548
Reviewed to	AS/NZ 3260:1993 Australian/New Zealand Standard EN 60950/A4: 1997 European Norm IEC 950 (2nd edition, 3rd amend)

* Maximum operating temperature at Sea Level. Reduce by 1 C (1.8 F) for each 600 m (2000 ft) above Sea Level.

† Higher altitudes are possible if maximum operating temperature is reduced (see Temperature, above); other restrictions may apply, such as maximum permissible altitude for hard drives.