Overview

AT A GLANCE

- Configured and fully tested with two AlphaServer ES40 systems, each with two EV67 667-MHz processors
- Choice of Tru64 UNIX or OpenVMS operating systems
- Cluster software, cluster interconnect, cables, memory and RAID storage create a "cluster-enabled" system
- Hardware and software factory integration and test performed by Compaq *Custom*Systems
- Optionally configurable to meet unique customer specifications with additional processors, memory, storage, and services
- Optional services available for database and application software loading

Note: For complete AlphaServer ES40 ordering and configuring information, see the AlphaServer ES40 QuickSpecs

H9A15 Cabinet

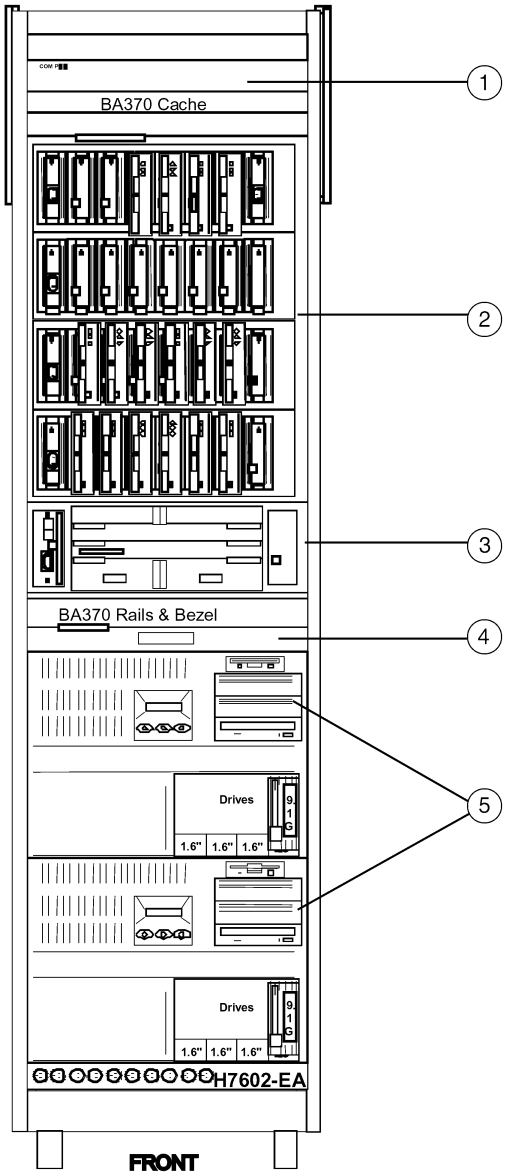

1. TFT Flat Panel Monitor (stowed)
2. StorageWorks Shelves
3. Fibre Channel RAID Controllers
4. Keyboard
5. AlphaServer ES40 Systems

Standard Features

Note: The standard features listed below apply to each AlphaServer ES40 included in the Cluster Base System.

Processor

Alpha 21264 667-MHz processor

Cache Memory

8-MB L2 Dual Data Rate backup cache

Upgradability

Supports additional processors and upgrades of memory and hard drives

Memory

Standard	3 GB
Maximum	32 GB (32 DIMM slots)

Network Controller

10/100 Mb Fast Ethernet

Expansion

Total expansion slots	10 slots

Storage

Diskette Drive	1.44-MB diskette drive
CD-ROM	600-MB 32X IDE CD-ROM drive
Hard Drives	9.1-GB and 18.2-GB UltraSCSI disk drives

Interfaces

Parallel	1 Bi-directional parallel port, 24-pin D-subminiature connector
Serial	2 EIA-232 full duplex asynchronous modem control serial ports, 9-pin D-subminiature connectors
USB	Dual USB ports
Keyboard	1
Mouse	1
Remote systems management	1 dedicated remote systems management port
SCSI connections	Two 68-pin SCSI connection knockouts

Graphics

ELSA Gloria Graphics

Form Factor

Rackmount (M-Series Cabinet) – Cabinet houses both AlphaServer ES40 systems

Manageability

Compaq Insight Manager

Power Supply

Auto sensing power supply, hot swappable, N+1

Standard Features

OS Support

ES40 Cluster Base System for Tru64

Each AlphaServer ES40 Tru64 UNIX system includes Tru64 UNIX Unlimited User license, Server Extension license, Open Source Internet Solutions, and iPlanet Web Server – Enterprise Edition 4.0, and TruCluster Production Server license (Minimum OS support – Tru64 UNIX V5.0)

ES40 Cluster Base System for OpenVMS

Each AlphaServer ES40 OpenVMS system includes OpenVMS base license with system manager license and Compaq Enterprise Integration Server License Package for OpenVMS Revision V3.0A, OpenVMS Cluster license, and OpenVMS Volume Shadowing license (Minimum OS support – OpenVMS V7.2-1)

Service and Support

Protected by Compaq Services, including a three-year, on-site hardware warranty with 5x9, 24-hour response. Training, consulting, network integration, comprehensive system maintenance and guaranteed uptime services are also available for customers requiring higher levels of service and support.

Cluster Base Systems

AlphaServer ES40 Cluster Base Systems

- Refer to the AlphaServer ES40 QuickSpecs – http://www.compaq.com/quickspecs – for configuration details, additional software, and services information.
- Contact Compaq *Custom*Systems for ordering information.

AlphaServer ES40 Cluster Base Systems	OS	CPU	Order No.
Two ES40 Model 2 Systems	Tru64 UNIX	667 MHz	DA-64BCS-DA/D*
Two ES40 Model 2 Systems	OpenVMS	667 MHz	DY-64BCS-DA/D*

* EMEA and AP variant

Cluster Base Systems include:

- 667-MHz CPUs, each with 8-MB L2 cache (2 per ES40)
- 3-GB memory per ES40
- 10/100-Mb Network Interface Card (1 per ES40)
- 9.1-GB 10,000 rpm Internal Disk Drives (2 per ES40)
- ELSA Gloria Graphics (1 per ES40)
- KGPSA Fibre Host Adapter (1 per ES40)
- MEMORY CHANNEL Controller (2 per ES40)
- BA370 StorageWorks Shelf (1 per system)
- 18.2-GB 10,000 rpm Disk Drives (14 per system))
- HSG80 Fibre Channel RAID Controller (1 per ES40)
- HSG Battery Backup (1 per system)
- HSG Software Kits
- Flat Panel Monitor
- 4-port Master Console
- Keyboard/Trackball Mouse
- FC Ready Cabinet
- Cluster software/media & documentation on CD-ROM
- CSS Factory Integration
- VIS Support
- All required cables, power cords, hardware, software

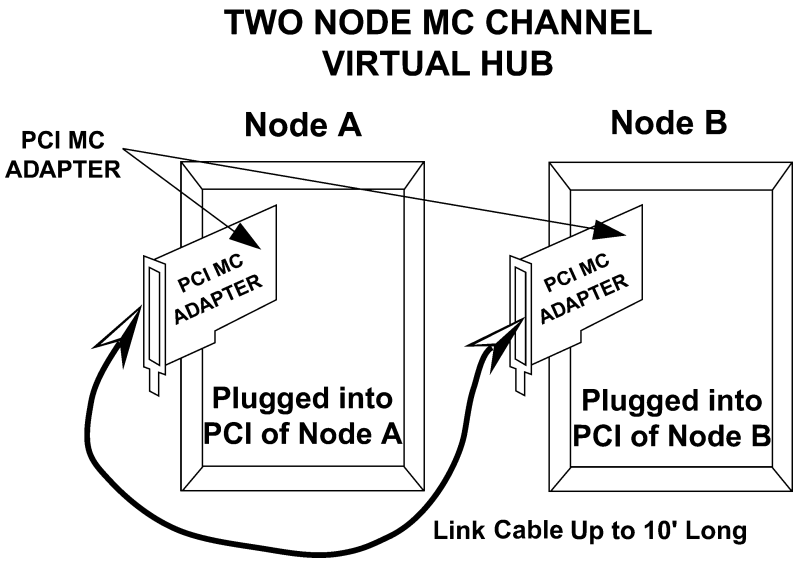

Cluster Base Systems

MEMORY CHANNEL 2

- MEMORY CHANNEL 2 is a high-speed, high-performance PCI memory interconnect between two or more closely coupled systems

Minimum configuration	Two CCMAB adapters connected with link cable (virtual hub model)
Maximum configuration	Eight CCMAB adapters connected to CCMHB hub
Bandwidth	100 MB/sec full duplex (limited by PCI 32 bandwidth)
Interconnect length	10 m (3 km with optional fiber interconnect)
Total bandwidth of cluster with one interconnect	800 MB/sec
Interprocess latency	2.9 ms

Features

- MEMORY CHANNEL 2 provides the low latency of SMP (symmetrical multiprocessing) systems, across more processors and platforms. Unlike network message passing in a traditional cluster environment, communication is accomplished across a memory bus, shared among the cluster nodes.
- MEMORY CHANNEL is somewhat unique – it is not memory, but a bus or channel into the memory of another system.
- MEMORY CHANNEL 2 is not hardware compatible with earlier generation MEMORY CHANNEL products due to its higher performance interconnect.
- MEMORY CHANNEL 2 can also be configured with Fiber Optic options.

Compaq TruCluster Server

- Compaq TruCluster Server V5.0 provides new and significant features that bring Compaq Tru64 UNIX to the highest degree of performance, scalability, and availability, yet makes it easier than ever to manage and operate. Compaq TruCluster Server makes management of multiple systems so simple that it requires less time and effort on expensive training for system administrators. For customers looking to expand their information technology in the simplest way, while increasing performance and maintaining the highest level of availability, Compaq offers
the best UNIX solution.

Compaq TruCluster Server V5.0

- Manages multiple systems as one from any point
- Slashes management costs with superior “onboard” management
- Easily scales applications to suit individual business growth
- Offers high availability at an affordable price

Compaq Tru64 UNIX

- Compaq TruCluster Server and Compaq Tru64 UNIX are designed to work together to provide the power of UNIX without the complexity. Tru64 UNIX solutions offer the performance, scalability, reliability, and high availability that an enterprise expects from a UNIX operating system, without the hassles of managing a complex system. Tru64 UNIX V5.0 introduces a paradigm shift in the industry with its breakthrough management capabilities.

Tru64 UNIX V5.0

- Makes system management simple and cost effective
- Provides Compaq NonStop™ eBusiness solutions
- Powers the most performance-hungry applications

Compaq OpenVMS

- OpenVMS Alpha V7.2-1 is the newest release of OpenVMS, which provides the highest level of interoperability between OpenVMS and Windows NT. It also offers a new computing environment that was introduced with OpenVMS V 7.2 -- Galaxy Software Architecture on OpenVMS Alpha -- that delivers even greater levels of performance, scalability, availability, and extremely flexible operational capabilities.
- With these latest additions, users can gain increased performance by running OpenVMS Alpha V7.2-1 on the newest Alpha systems. Plus, OpenVMS Cluster customers have even more options now with the addition of Fibre Channel as a new ANSI standard shared storage interconnect, with Gigabit Ethernet as a cluster interconnect, and with support for faster MEMORY CHANNEL V2.0 hardware