Overview

At A Glance

AlphaServer™/AlphaStation ™ ES40 Linux-Ready Systems include:

- Alpha 21264 6/500-MHz CPU with 4-MB L2 Late Write Cache, 67/667-MHz CPU with 8-MB L2 Dual Data Rate Cache, or 68/833-MHz CPU with 8-MB L2 Dual Data Rate Cache
- Six 64-bit PCI I/O expansion slots
- 512-MB memory option
- 1.44-MB diskette drive
- 600-MB 40X IDE CD-ROM drive
- Two 9-pin serial ports
- One 25-pin parallel port
- RMC dedicated serial port, 6-pin MMJ connector
- Dual USB ports
- Keyboard and mouse port
- Knockouts for two 68-pin SCSI connections
- Auto-sensing power supply
- U.S. English keyboard with North America orders
- 3-button mouse
- Integral remote system management console
- Customer documentation
- Protected by Compaq Services, including three-year hardware warranty, on-site with 5 x 9 next business day response

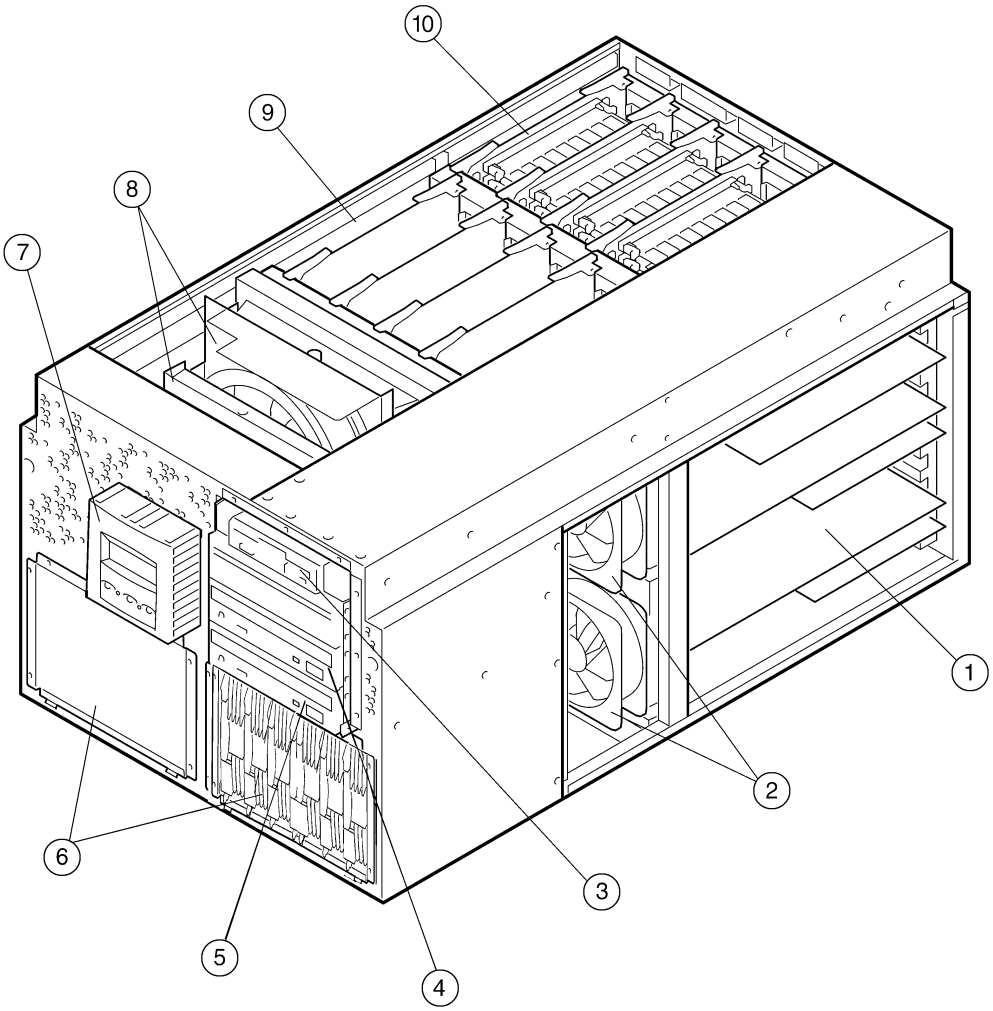

1. PCI cards
2. Fans
3. Diskette drive
4. Removable media bays
5. CD-ROM drive
6. 6-bay disk drive storage cages
7. Control panel
8. Fans
9. CPUs
10. Memory

Standard Features

Processor	Alpha 21264 6/500-MHz CPU, 67/667-MHz CPU, or 68/833-MHz CPU	
Cache Memory	4-MB L2 Late Write Backup Cache 8-MB MB L2 Dual Data Rate Backup Cache (67/667-MHz CPU, 68/833-MHz CPU)	
Upgradability	Supports additional processors and upgrades of memory and hard drives	
Memory	Minimum	512 MB
	Maximum	32 GB (see Step 3)
Network Controller	Choice of Ethernet controllers	
Expansion	PCI I/O slots	6
Storage	Diskette Drive	1.44-MB diskette drive in dedicated slot
	CD-ROM	600-MB 40X IDE CD-ROM
	Hard Drives	Choice of 18.2-GB, 36.4-GB, or 72.8-GB drives
Interfaces	Parallel	1 25-pin parallel port
	Serial	2 9-pin serial ports
	USB	Dual USB ports
	Keyboard	1
	Mouse	1
	Remote systems management	1 dedicated remote systems management port
	SCSI connections	Two 68-pin SCSI connections knockouts
Graphics	Optional	
Form Factor	Tower, Pedestal, Rackmount (M-Series Cabinet)	
Power Supply	Auto sensing power supply, hot swappable, N+1 (see Step 4)	
Service and Support	Protected by Compaq Services including a three-year on-site hardware warranty with next business day response. Training, consulting, network integration, software support, comprehensive system maintenance and guaranteed uptime services are also available for customers requiring higher levels of service and support.	

Systems/Options

Step 1 – Select system

AlphaServer ES40 systems require the **mandatory** selection of the following items:

- Disk drive cage or *StorageWorks*™ shelf (Step 5)
  - Disk drive cage (BA610-6D) requires mandatory selection of Ultra2 SCSI LVD storage adapter (3X-KZPCA-AA)
  - StorageWorks shelf requires UltraSCSI adapter and SCSI cable (Step 10)
- System disk drive (Step 5)
- Ethernet adapter (Step 7)
- Tower, Pedestal, or Rack Kit (Step 8)
- Non-North American systems require country-specific keyboard (Step 16); North American systems include U.S. English keyboard

NOTES: ES40 Model 1 to Model 2 Upgrade Kit available – See Step 16.
For system integration of options with 6-3 part numbers, contact *Custom*Systems.

AlphaServer ES40 Systems				
ES40	**CPU**	**PCI I/O Slots**	**Memory/Cache**	**Order No.**
Model 1	500 MHz	6	512 MB/4 MB	DJ-62AAA-CA
Model 1	667 MHz	6	512 MB/8 MB	DJ-62BAA-CA
Model 1	667 MHz	6	1 GB/8 MB	DJ-62BAA-DA
Model 1	667 MHz	6	2 GB/8 MB	DJ-62BAA-EA
Model 2	667 MHz	10	1 GB/8 MB	DJ-64BAA-DA
Model 2	667 MHz	10	2 GB/8 MB	DJ-64BAA-EA
Model 2	667 MHz	10	4 GB/8 MB	DJ-64BAA-FA
Model 1	833 MHz	6	512 MB/8 MB	DJ-62CAA-CA
Model 1	833 MHz	6	1 GB/8 MB	DJ-62CAA-DA
Model 1	833 MHz	6	2 GB/8 MB	DJ-62CAA-EA
Model 2	833 MHz	10	1 GB/8 MB	DJ-64CAA-DA
Model 2	833 MHz	10	2 GB/8 MB	DJ-64CAA-EA
Model 2	833 MHz	10	4 GB/8 MB	DJ-64CAA-FA

AlphaStation ES40 Systems				
Model 1	667 MHz	6	512 MB/8 MB	DJ-62BAA-BW
Model 2	667 MHz	10	512 MB/8 MB	DJ-64BAA-CW
Model 2	833 MHz	10	512 MB/8 MB	DJ-64CAA-CW

Step 2 – Additional CPU Modules –Optional

- One CPU included, three additional CPUs are supported

SMP upgrade includes one 6/500-MHz CPU with 4-MB cache	KN610-AA
SMP upgrade includes one 67/667-MHz CPU with 8-MB cache	KN610-BA
SMP upgrade includes one 68/833-MHz CPU with 8-MB cache	KN610-CA

NOTE: When upgrading to 68/833-MHz CPUs, all 67/667-MHz CPUs or all 6/500-MHz CPUs must be replaced; all CPU modules must be at the same speed. Additionally, when upgrading from 6/500-MHz to 67/667-MHz CPUs, the EV6 system (54-25385-01) must be at Rev E05 or higher. For Revisions lower than E05, contact Customer Services or 1-800-OK-COMPAQ (I-800-652-6672) and reference FCO #00-ES40 F002. Additionally, when upgrading to EV68, first upgrade the console firmware as outlined below:

From:	**To:**
EV67 667-MHz CPU	**EV68 833-MHz CPU** Upgrade console firmware to V5.9-24 as minimum revision Upgrade system hardware with EV68 CPUs Ensure all system firmware matches console version V5.9-24
EV6 500-MHz CPU	**EV68 833-MHz CPU** Upgrade console firmware to V5.9-24 as minimum revision Upgrade system hardware with EV68 CPUs Re-install V5.9-24 console firmware Ensure all system firmware matches console version V5.9-24

Options

Step 3 – Memory – Optional

- Systems include one memory option; maximum 16 GB Model 1 and 32 GB Model 2 (see Notes below)
- Memory performance considerations: Interleaved operations reduce the average latency and increase the memory throughput over non-interleaved operations. With one memory option (4 DIMMs) installed, memory interleaving will not occur. With two identical memory options (8 DIMMs) installed, memory read-write operations are two-way interleaved. With four identical memory options (16 DIMMs) installed, memory read-write operations are four-way interleaved, maximizing memory throughput.

512-MB memory option (4 x 128-MB DIMMs)	MS610-CA
1-GB memory option (4 x 256-MB DIMMs)	MS610-DA
2-GB memory option (4 x 512-MB DIMMs)	MS610-EA
4-GB memory option (4 x 1024-MB DIMMs)	MS610-FA

NOTES: ES40 configurations that require maximum N+1 power (three power supplies) are restricted to a maximum of 24-GB of memory. If N+1 maximum power is not required, 32-GB of memory is supported.

The patch to support greater than 2-GB of memory per system is located at: http://www.kernel.org/pub/linux/kernel/people/andrea/patches/v2.2/2.2.17 (patch name: bigmem-2.2.18pre2-18.bz2)

The following minimum operating system versions require the patch:

- Linux RedHat V6.2
- Linux SuSE V6.3 (Kernel V2.2.17)

The following operating system minimum versions support greater than 2-GB of memory:

- Linux RedHat V7.0 (installs Kernel V2.2.17)
- Linux SuSE V7.0 (installs Kernel V2.2.16)

When installing Linux SuSE V7.0 on a system with more than 2-GB of memory, user will be prompted for a (ramdisk) floppy. To create a floppy:

- Mount the SuSE V7.0 installation CD-ROM #1 on the system.
- Mount a blank formatted floppy (if not formatted, execute the following command: fdformat/dev/fd0H1440).
- Change directory, to the "disks" directory on the install CD-ROM.
- Execute the following command to create the floppy contents: dd if=install of=/dev/fd0.

Use this floppy when prompted by the install procedure for a floppy.

Options

Step 4 – Additional Power Supplies – Required for third and fourth CPUs and/or second Disk Drive Cage

- One power supply supports two CPUs, up to 12 memory DIMMs, and one disk card cage; order second power supply if N+1 power is required.
- Two power supplies support third and fourth CPU, 13 to 32 memory DIMMs (up to 24-GB of memory), and/or two disk card cages; order third power supply if N+1 power is required for third and fourth CPUs, 24-GB of memory, and/or two disk card cages.
- Three power supplies support 32-GB of memory without N+1 power.
- Three power supplies support a maximum of 24-GB of memory with N+1 power.
- Each additional power supply ordered with a tower system requires an additional country-specific power cord
- Pedestal systems and Rack kit include three internal power cords regardless of the number of power supplies ordered.

ES40 720W power supply	H7906-A9

Step 5 – Disk Drive Cage or StorageWorks Shelf – Mandatory

- Tower enclosure supports one system and two disk drive cages
- Pedestal enclosure supports one system and two disk drive cages, two Universal 43xx StorageWorks shelves or three BA36R StorageWorks shelves
- M-Series cabinets support five systems each with two disk drive cages and up to six StorageWorks shelves

Step 5a – Disk Drive Cage – Requires selection of system disk drive

- Disk drive cage supports six 1.0″ Universal disk drives per cage

6-bay disk drive cage with cable for use with 1.0″ Universal drives – requires mandatory selection of LVD Ultra2 adapter (3X-KZPCA-AA) per disk drive cage	BA610-6D
6-bay disk drive cage with embedded Ultra2 LVD adapter; supports internal SCSI 1.0″ universal drives or tapes only	BA610-6E

System Disk Drives *(Supported in Disk Drive Cage)*	18.2-GB Ultra3 SCSI 15,000 rpm 1.0″ Universal disk drive	3R-A1543-AA
	18.2-GB Ultra3 SCSI 10,000 rpm 1.0″ Universal disk drive	3R-A0585-AA
	36.4-GB Ultra3 SCSI 10,000 rpm 1.0″ Universal disk drive	3R-A0919-AA
	36.4-GB Ultra3 SCSI 15,000 rpm 1.0″ Universal disk drive	3R-A3079-AA
	72.8-GB Ultra3 SCSI 10,000 rpm 1.0″ Universal disk drive	3R-A3050-AA

Step 5b – StorageWorks BA36R Shelf –Requires selection of UltraSCSI adapter and SCSI cable (Step 10) and system disk drive

- StorageWorks Shelf supports seven 3.5″ x 1.6″ hard disk drives; with addition of redundant power supply, only six drives are supported
- StorageWorks shelf kits are mounted back-to-back in pedestals and cabinets

StorageWorks UltraSCSI single-bus shelf kit	BA36R-RC
StorageWorks UltraSCSI split-bus shelf kit;	BA36R-RD
NOTE: When ordering a split-bus shelf that will be mounted in a Pedestal Enclosure, order one BN37A-03 cable for KZPCM-DA, or one BN38C-03 cable for 3X-KZPCA-AA or 3X-KZPBA-CC.	
3-meter SCSI cable	BN37A-03

System Disk Drives *(Supported in StorageWorks BA36R Shelf)*	9.1-GB Wide UltraSCSI 10,000 rpm drive	DS-RZ1DD-VW
	18.2-GB Wide UltraSCSI 10,000 rpm disk drive	DS-RZ1ED-VW
	36.4-GB Wide UltraSCSI 10,000 rpm disk drive	DS-RZ1FC-VW

Options

Step 5 – Disk Drive Cage or StorageWorks Shelf – Mandatory *(continued)*

Step 5c – StorageWorks Model 4314R and Model 4354R Universal Drive Shelves

	StorageWorks Model 4314R, 4354R Ultra2 SCSI (LVD) single-bus and split-bus Universal drive shelves; refer to Compaq StorageWorks Enclosure 4300 Family QuickSpecs when configuring shelves. When selecting a DS-SL13R-split-bus shelf, order two 3X-KZPCA-AA adapters with BN38C-xx cables. Model 43xx enclosures are compatible with Wide Ultra2 (LVD) adapters only. Note that the depth of a DS-SL13R-xx shelf does not allow front and rear mounting.	
	StorageWorks Model 4314R Ultra3 SCSI (LVD) single-bus Universal drive rackmount shelf, U.S. (190209-001)	DS-SL13R-AA (All regions except Japan)
	StorageWorks Model 4314R Ultra3 SCSI (LVD) single-bus Universal drive rackmount shelf, Japan	190209-291 (U.S./Canada orders for Japan variant)
		DS-SL13R-AJ (Non U.S./Canada orders for Japan variant)
	StorageWorks Model 4354R Ultra3 SCSI (LVD) split-bus Universal drive rackmount shelf, U.S. (190211-001)	DS-SL13R-BA (All regions except Japan)
	StorageWorks Model 4354R Ultra3 SCSI (LVD) split-bus Universal drive rackmount shelf, Japan	190211-291 (U.S./Canada orders for Japan variant)
		DS-SL13R-BJ (Non U.S./Canada orders for Japan variant)
StorageWorks Model 4314T Standalone Enclosure for Universal Drives	Model 4314T Ultra3 SCSI, single-bus tower enclosure, U.S.	190210-001 (U.S./Canada orders)
		DS-SL13T-AA (Other country orders)
	Model 4314T Ultra3 SCSI, single-bus tower enclosure, International	(190210-B31 (U.S./Canada orders)
		DS-SL13T-AB (Other country orders)
	Model 4314T Ultra3 SCSI, single-bus tower enclosure, Japan	190210-291 (U.S./Canada orders)
		DS-SL13T-AJ (Other country orders)
System Disk Drives *(Supported in Model 4314R and 4354R Universal Drive Shelves)*	18.2-GB Ultra3 SCSI 10,000 rpm 1.0″ Universal disk drive	3R-A0585-AA
	18.2-GB Ultra3 SCSI 15,000 rpm 1.0″ Universal disk drive	3R-A1543-AA
	36.4-GB Ultra3 SCSI 10,000 rpm 1.0″ Universal disk drive	3R-A0919-AA
	36.4-GB Ultra3 SCSI 15,000 rpm 1.0″ Universal disk drive	3R-A3079-AA
	72.8-GB Ultra3 SCSI 10,000 rpm 1.0″ Universal disk drive	3R-A3050-AA

Options

Step 6 – Internal Removable Media –Optional

- System supports four internal removable devices
- System includes 1.44-MB diskette drive
- System includes 5.25″ half-height 600-MB 40X IDE CD-ROM
- Removable media slots provide support for two 5.25″ half-height devices, or one 5.25″ full-height removable media device

5.25-inch half-height 12/24-GB 4 mm DAT SCSI tape drive, top gun blue; requires single-ended UltraSCSI adapter (3X-KZPBA-CC or KZPCM-DA) and SCSI cable (3X-BN46M-01)	TLZ10-LB
1-meter Ultra2 68-pin LVD cable with two connectors, multimode terminator and two wide-to-narrow adapters (for connection of 50-pin narrow devices)	3X-BN46M-01

Step 7 – Ethernet Adapters – Mandatory

- Each adapter uses one PCI slot

PCI 1-port 32-bit 10/100-Mb single-channel UTP Fast Ethernet adapter (Twisted Pair) maximum four per system	3X-DE600-AA
Cable for 10BaseT twisted pair connection	BN25G-xx
PCI to 10/100/1000 UTP Ethernet adapter, maximum four per system; no network boot support; for multiple adapters set console variable BOOT_RESET to YES and console firmware to V6.0	DEGPA-TA

Step 8 – System Enclosures –Mandatory selection of Tower, Pedestal, or Rack Kit

Step 8a – Tower Enclosure

- Tower enclosure supports one system
- Tower enclosure ordered in North America includes 120V power cord; country-specific power cord mandatory for all non-North American systems; additional power cord mandatory for each power supply ordered with a system installed in a tower enclosure

Tower enclosure	BA61M-MT

Step 8b – Pedestal Enclosure

- Pedestal enclosure supports one system, two Universal 43xx StorageWorks shelves (Universal shelves require onsite installation) or three UltraSCSI BA36R StorageWorks shelves
- Pedestal enclosures (BA61P-PA, 120V/BA61P-PB, 240V) support Universal shelves
- 120V pedestal enclosure includes two external 120V power cords; 240V pedestal enclosure requires two country-specific power cords

Pedestal enclosure, 120V	BA61P-PA
Pedestal enclosure, 240V	BA61P-PB

Step 8c – Rack Kit for M-Series Cabinet

- Rack kit required for each AlphaServer ES40 system installed in a new or existing M-Series Cabinet
- Rack kit supports one system

Rack kit for AlphaServer ES40, includes dress bezel, slides, three internal power cords, all bracketry and hardware for mounting in M-Series Cabinets	BA61R-RM

NOTE: Factory integration of an ES40 system drawer in a Compaq 9000 rackmount cabinet using rack kit, 3X-BA61R-RC, is not supported. Contact CustomSystems or a Compaq Certified Integration Partner.

Options

Step 9 – M-Series Cabinets

M-Series cabinet enclosures support up to four systems, up to six StorageWorks shelves, and/or two BA370 enclosures; M-series Enclosures require selection of the following items:

- H9A10 or H9A15 cabinet, 120V or 240V
- Rack kit for each system
- H9A10 or H9A15 rear cabinet extender
- Cabinet front door based on cabinet height
- Factory integration
- Ballast kit if only one system is ordered for the H9A15 cabinet

NOTE: For configurations beyond those listed in the following charts, contact CustomSystems.

Cabinet Configuration Chart for AlphaServer ES40 (8U) **with StorageWorks Shelves** (4U)

Cabinet	Rack Kit	Cabinet Extender	Cabinet Height/Space	Systems	BA356 Shelves	DS-S L13R 120V Shelves[2]	BA356/ DS-SL13R[3]	
							BA356	DS-SL13R
H9A10-MC/MD[1]	BA61R-RM	H9C10-TE	67″/34U	1	6	8	6	4
				2	6	5	6	1
				3	2	2	4	0
				4[1]	0	0	0	0
H9A15-MC/MD[4]	BA61R-RM	H9C15-TE	79″/41U	1	6	8	6	5
				2	6	5	6	2
				3	6	2	6	0
				4	2	0	2	0
				5[5]	0	0	0	0

NOTES:

1. Contact Compaq *Custom*Systems for cabinet configurations with four ES40 systems installed in an H9C10-MC/MD cabinet.
2. Japan only – 240V cabinet required when using universal shelves
3. When using a combination of BA356 and DS-SL13R shelves in cabinet, do not remove top fan, only remove fan when using DS-SL13R shelves exclusively (Universal shelves require onsite installation).
4. Installation of one AlphaServer ES40 system in an H9A15 cabinet requires the mandatory selection of a ballast kit.
5. When adding the 5th system drawer, replace H7600-AA or -DB power controller with H7602-EA or -DB power controller. When replacing H7600 controllers, replace all associated power cords; order BN35S-4E power cords for H7602-EA and H7602-DB power controllers.

M-Series Cabinets	Requires selection of one cabinet • Two H7600-xx power distribution units are standard in the M-series cabinet • For cabinet configurations that require a third power distribution unit (H7600-xx), contact Compaq CustomSystems at 1-800-AT-COMPAQ	
	67-inch cabinet with 59.5-inch or 34U of usable vertical space, 120V dual-24A controller, each with 10 NEMA 5-15R outlets, input power plug NEMA L5-30P, Americas, Asia Pacific; includes rear door and top fan tray	H9A10-MC
	67-inch cabinet with 59.5-inch or 34U of usable vertical space, 240V dual-16A controller, each with 12 IEC C13 outlets, input power plug IEC 309, 16A, Europe; includes rear door and top fan tray	H9A10-MD
	79-inch cabinet with 71.7-inch or 41U of usable vertical space, 120V dual-24A controller, each with 10 NEMA 5-15R outlets, input power plug NEMA L5-30P, Americas, Asia Pacific; includes rear door and top fan tray	H9A15-MC
	79-inch cabinet with 71.7-inch or 41U of usable vertical space, 240V dual-16A controller, each with 12 IEC C13 outlets, input power plug IEC 309, 16A, Europe; includes rear door and top fan tray	H9A15-MD

Options

Step 9 – M-Series Cabinets *(continued)*

Rear Cabinet Extender	Required selection of one cabinet extender for each H9A10 or H9A15 cabinet	
	Rear cabinet extender, top gun blue, for H9A10-MC/MD cabinets	H9C10-TE
	Rear cabinet extender, top gun blue, for H9A15-MC/MD cabinets	H9C15-TE
Cabinet Front Door	Required selection of door based on cabinet height	
	Front door, top gun blue, for H9A10-MC/MD cabinet enclosure	H9C10-TF
	Front door, top gun blue, for H9A15-MC/MD cabinet enclosure	H9C15-TF
Factory Integration	Required	
	Factory Integration of systems and storage devices assembled and configured in cabinet enclosure in predefined locations	YS-ASCAA-AA
Ballast Kit	Required only if one system is ordered for the H9A15 cabinet	
	Ballast is added to a cabinet at particular locations for specific configurations to meet safety regulations for installation, operation, and service; see Cabinet Configuration Charts.	
	Two 35 to 40 lb steel plates	H9C10-MC
Shelves Supported in M-series Cabinets	Optional	
	UltraSCSI single-ended RETMA rack, single-bus personality module, 180W power supply	BA36R-RC
	UltraSCSI single-ended RETMA rack, split-bus personality module, 180W power supply	BA36R-RD
Power Supply	180W power supply, includes 120V North American and 240V IEC power cord	DS-BA35X-HH

Step 10 – Storage Adapters – Required if StorageWorks shelf is selected in Step 5

	NOTE: The following adapter is mandatory for use with the BA610-6D 6-bay disk drive cage.	
	PCI 1-port Ultra2 (LVD) SCSI adapter, 32-bit, single-channel (uses one PCI slot); includes internal 68-pin and external 68-pin HD connectors; requires BN38C-xx cable to connect adapter to Ultra2 shelf; HSZxx RAID controllers not supported.	3X-KZPCA-AA
	68-pin HD male-to-VHDCI male UltraSCSI cable; xx = 02, 03, 05, 10, 20, 25 m	BN38C-xx
	NOTE: The following adapters are only supported with StorageWorks shelves; not supported with the BA610-6D disk drive cage.	
	PCI 1-port UltraSCSI differential adapter (uses one PCI slot); includes external 68-pin HD connector, requires BN38C-xx cable to connect adapter to shelf or RAID controller, maximum five per system	3X-KZPBA-CC
	68-pin HD male-to-VHDCI male UltraSCSI cable; xx = 02, 03, 05, 10, 20 m	BN38C-xx
	PCI 1-port Ultra SCSI RAID controller with 4-MB cache; maximum four per system; supports disk drives only and external support only in BA356 StorageWorks shelves	SN-KZPBC-AA
	PCI 3-port Ultra SCSI RAID controller with 32-MB cache; maximum four per system; supports disk drives only and external support only in BA356 StorageWorks shelves	FR-PCTAR-IB
	PCI 3-port Ultra SCSI RAID controller with 64-MB cache; maximum four per system; supports disk drives only and external support only in BA356 StorageWorks shelves	FR-PCTAR-IC

Options

Step 10 – Storage Adapters – Required if StorageWorks shelf is selected in Step 5 *(continued)*

Step 10a – Storage Adapters (Optional)

	PCI-to-Fibre Channel adapter, 64-bit, single-channel (uses one PCI slot); includes cable to HSG80 controller; requires Linux RedHat V6.2 and Linux SuSE V6.3, maximum three per system; for more information refer to http://www.compaq.com/products/storageworks/adapters/fchba-linux.html **NOTE**: This website is available in English only.	DS-SWLA4-PD

Step 11 – Storage Devices – Optional

DLT Tape Drives	DLT8000 40/80-GB DLT external tabletop tape drive (supports Linux RedHat V6.2, EV6 only)	146197-B21
	DLT8000 40/80-GB DLT external tabletop tape drive (supports Linux RedHat V6.2, EV6 only) – Japan only	146197-291
	DLT8000 40/80-GB DLT tape drive, SBB	DS-TZ90N-VW
	110/220-GB SDLT tape drive, supported in DLT tape drive enclosure	192106-B21
AIT Tape Drives	35/70-GB AIT hot plug LVD Universal tape drive, uses two slots in BA610-6D or 43xxx shelves	3R-A2396-AA
	50/100-GB AIT hot plug LVD Universal tape drive, uses two slots in BA610-6D or 43xxx shelves	3R-A2779-AA
DAT Drive	20/40-GB DAT DDS4 hot plug LVD Universal tape drive, uses two slots in BA610-6D or 43xxx shelves	3R-A2780-AA

Step 12 – Graphics Adapters – Optional

	• Select graphics adapter, monitor, and country-specific keyboard if required	
	3Dlabs Oxygen VX1 32-MB PCI 2D graphics accelerator; maximum one per system	SN-PBXGF-AB

Options

Step 13 –Monitors –Optional

- Graphics monitors other than those listed can be used if compatible with SVGA graphics ordered with system
- At least one video cable, 6-foot/1.8-m length, is included with all variants of monitors.
- Video extension cable required if monitor is located more than 1 meter from server
- Monitors will ship with, but not be integrated with systems.

Carbon/Silver Monitors	V570 15-inch (13.8-inch viewable image size) multiple-scan color monitor, VGA to 1024 x 768 @ 85 Hz, 0.28 mm DP, MPRII/Energy Star Compliant, Northern Hemisphere with NA power cord, VGA cable	3R-A3383-AA 228113-001
	Same as above with Euro-power cord, TCO99	3R-A3384-AA 228113-021
	Same as above, APD, no power cord, MPRII	3R-A3385-AA 228113-B22
	Same as above, PRC with power cord, CCIB	3R-A3386-AA 228113-AA1
	Same as above, Southern Hemisphere, with Australia/New Zealand power cord	3R-A3387-AA 228113-011
	Same as above, Equatorial, for Latin America with NA power cord	3R-A3704-AA 228113-B29
	P720 17-inch (16-inch viewable image size) auto-scanning color monitor, Diamondtron NF, 0.25 mm aperture grille pitch, VGA to 1280 x 1024 @ 85 Hz, MPRII/TCO 99/Energy Star Compliant, Northern Hemisphere with NA power cord, VGA cable	3R-A3388-AA 244373-001
	Same as above, with Euro-power cord	3R-A3389-AA 244373-021
	Same as above, APD, no power cord	3R-A3390-AA 244373-B24
	Same as above, PRC with power cord, CCIB	3R-A3391-AA 244373-AA1
	Same as above, Southern Hemisphere, with Australia/New Zealand power cord	3R-A3392-AA 244373-011
	P920 19-inch (18-inch viewable image size) auto-scanning color monitor, Diamondtron NF, 0.24 mm aperture grille pitch, VGA to 1600 x 1200 @ 85 Hz, MPRII/TCO 99/Energy Star Compliant, Northern Hemisphere with NA power cord, VGA cable	3R-A3393-AA 244375-001
	Same as above, with Euro power cord	3R-A3394-AA 244375-021
	Same as above, PRC with power cord, CCIB	3R-A3396-AA 244375-AA1
	Same as above, Southern Hemisphere, 0.25 to 0.27 mm aperture grille pitch, with Australia/New Zealand power cord	3R-A3397-AA 244375-011
	P1220 22-inch (20-inch viewable image size) auto-scanning color monitor, Diamondtron NF, 0.24 mm aperture grille pitch, VGA to 1792 x 1344 @ 85Hz, dual video input, USB Hub, MPRII/TCO 99/Energy Star Compliant, Northern Hemisphere with NA power cord, VGA cable	3R-A3398-AA 244374-001
	Same as above, with Euro power cord	3R-A3399-AA 244374-021
	Same as above, APD, no power cord	3R-A3400-AA 244374-B24
	Same as above, PRC with power cord, CCIB	3R-A3401-AA 244374-AA1
	Same as above, Southern Hemisphere, with Australia/New Zealand power cord	3R-A3402-AA 244374-011

Options

Step 13 – Monitors – Optional *(continued)*

Carbon/Silver Flat Panel Monitors	TFT8030, 18.1-inch (18.0-inch viewable image size) TFT flat panel monitor, 0.28 mm pixel pitch, 1280 x 1024 @ 75 Hz, multi-mode support, MPRII/TCO99/Energy Star compliant, six video input connectors (two VGA, two DVI-I, one S-video, and one C-video), NA power cord, VGA and DVI-I cables	3R-A3511-AA 234362-001
	TFT5030, 15.1-inch (15.0-inch viewable image size) TFT flat panel monitor, 0.30 mm pixel pitch, 1024 x 768 @ 75 Hz, multi-mode support, MPRII/TCO99/Energy Star compliant, two video input connectors (one VGA and one DVI-I), NA power cord, VGA and DVI-I cables	3R-A3353-AA 228134-001
Video Extension Cable	6-foot/1.8-meter video extension cable – optional	BN39C-02
Monitor Power Cords	North American, 120V, 75-inch	BN26J-1K
	Australia, New Zealand, 2.5-meter	103541-011 (U.S./Canada orders) BN19H-2E (Other country orders)
	Central Europe, 2.5-meter	BN19C-2E
	Denmark, 2.5-meter	103541-481 (U.S./Canada orders) BN19K-2E (Other country orders)
	Egypt, India, South Africa, 2.5-meter	103541-AR1 (U.S./Canada orders) BN19S-2E (Other country orders)
	Israel, 2.5-meter	BN18L-2E
	Italy, 2.5-meter	103541-461 (U.S./Canada orders) BN19M-2E (Other country orders)
	Japan, 2.5-meter, Dentori approved	3X-BN46F-02
	Switzerland, 2.5-meter	103541-511 (U.S./Canada orders) (BN19E-2E Other country orders)
	UK, Ireland, 2.5-meter	BN19A-2E

Options

Step 14 – Keyboards, Power Cords, Documentation

Step 14a – Keyboards and Mouse

- Select a keyboard and mouse
- Order country-specific keyboard or mouse only if required
- All keyboards listed may not be available in all geographies

Keyboard/Language	Carbon
U.S./English keyboard	3R-LKQ48-AA
Arabic keyboard	3R-LKQ48-BR
Belgian keyboard	3R-LKQ48-AB
BHCSY keyboard	3R-LKQ48-AX
Canadian/French keyboard	3R-LKQ48-AC
Cyrillic keyboard	3R-LKQ48-BT
Czech keyboard	3R-LKQ48-BV
Danish keyboard	3R-LKQ48-AD
Dutch keyboard	3R-LKQ48-AH
Finnish keyboard	3R-LKQ48-AF
French keyboard	3R-LKQ48-AP
German keyboard	3R-LKQ48-AG
Greek keyboard	3R-LKQ48-BH
Hebrew keyboard	3R-LKQ48-AT
Hungarian keyboard	3R-LKQ48-BQ
International keyboard	3R-LKQ48-BA
Italian keyboard	3R-LKQ48-AI
Korean keyboard	3R-LKQ48-AJ
Latin-American keyboard	3R-LKQ48-BK
Norwegian keyboard	3R-LKQ48-AR
Polish keyboard	3R-LKQ48-AN
Portuguese keyboard	3R-LKQ48-BP
S. Chinese keyboard	3R-LKQ48-AV
Slovak keyboard	3R-LKQ48-CV
Spanish keyboard	3R-LKQ48-CZ
Swedish keyboard	3R-LKQ48-AS
Swiss/French keyboard	3R-LKQ48-AM
Taiwanese keyboard	3R-LKQ48-AK
Thai keyboard	3R-LKQ48-BI
Turkish keyboard	3R-LKQ48-CB
UK keyboard	3R-LKQ48-AE

3-button Mouse	3-button mouse – opal	SN-PBQWS-WA
	3-button mouse – carbon	3R-A3480-AA

Keyboard or Mouse Extension Cable	6-foot/1.8 meter keyboard or mouse extension cable; to extend both keyboard and mouse order two cables	3X-BC34A-06

Step 14b – Power Cords

Tower Power Cords	• Tower enclosure ordered in North America includes 120V power cord; selection of country-specific power cord is mandatory for all non-North American orders.	
	• Each additional power supply ordered with a system installed in tower enclosure requires an additional power cord	

Options

Step 14 – Keyboards, Power Cords, Documentation *(continued)*

Step 14b – Power Cords *(continued)*

Pedestal Power Cords

- Pedestal systems ordered in North America include two 120V power cords; selection of two country-specific power cords is mandatory for all non-North American orders.

North American 120V, 75-inch	BN26J-1K
Australia, New Zealand, 2.5-meter	103541-011 (U.S./Canada orders) BN19H-2E (Other country orders)
Central Europe, 2.5-meter	BN19C-2E
Denmark, 2.5-meter	103541-481 (U.S./Canada orders) BN19K-2E (Other country orders)
Egypt, India, South Africa, 2.5-meter	103541-AR1 (U.S./Canada orders) BN19S-2E (Other country orders)
Israel, 2.5-meter	BN18L-2E
Italy, 2.5-meter	103541-461 (U.S./Canada orders) BN19M-2E (Other country orders)
Japan, 2.5-meter	3X-BN46F-02
Switzerland, 2.5-meter	103541-511 (U.S./Canada orders) BN19E-2E (Other country orders)
UK, Ireland, 2.5-meter	BN19A-2E

Step 14c – Documentation

Additional AlphaServer ES40 System Information Kit (print and CD), Owners Guide, User Interface Guide, and Release Notes	QA-6E88A-G8

Step 15 – Console Terminal –Optional

- Any terminal can be used as a console device
- Third-party console devices require an EIA-232 25-pin DSUB connector

VT510 video terminal; requires keyboard, H8575-x adapter and BC16E cable	VT510-xx
Console cable, female connector (25-pin passive adapter)	H8575-A
Console cable, male connector (adapter with EOS, ESD 25 POS D-SUB)	H8575-D

Step 16 – Upgrade Kit –Optional

Upgrades ES40 Model 1 with six I/O slots and support for four memory options to ES40 Model 2 with 10 I/O slots and support for eight memory options	3X-KFPPA-AA

Step 17 – Software

- Operating system software not included with these systems.

Options

Step 18 – Hardware Supplemental Support Services – Optional

Hardware—Americas and Asia Pacific Only

- Systems include three-year hardware warranty, onsite with 5 x 9, 24-hour response time
- Options ordered as part of initial system sale take on warranty of the enclosure
- Options added after initial system sale take on warranty of the enclosure until enclosure warranty ends
- All unique ES40 options have a minimum of one-year Return to Compaq Warranty
- Select optional Hardware Supplemental Support Services if required

Supplemental Service for ES40 Tower System	**Model 1**	**Model 2**
3-year, 5 x 9, 4-hour response time	FM-4T4HR-36	FM-4Q4HR-36
5-year, 5 x 9, 4-hour response time	FM-4T4HR-60	FM-4Q4HR-60
3-year, 7 x 24, 4-hour response time	FM-4T724-36	FM-4Q724-36
5-year, 7 x 24, 4-hour response time	FM-4T724-60	FM-4Q724-60
5-year, 5 x 9, next day, on-site	FM-4TXHW-60	FM-4QXHW-60
Supplemental Service for ES40 Pedestal System	**Model 1**	**Model 2**
3-year, 5 x 9, 4-hour response time	FM-4F4HR-36	FM-4G4HR-36
5-year, 5 x 9, 4-hour response time	FM-4F4HR-60	FM-4G4HR-60
3-year, 7 x 24, 4-hour response time	FM-4F724-36	FM-4G724-36
5-year, 7 x 24, 4-hour response time	FM-4F724-60	FM-4G724-60
5-year, 5 X 9, next day, on-site	FM-4FXHW-60	FM-4GXHW-60
Installation Services	**Model 1**	**Model 2**
Hardware product installation for ES40 Tower System	FM-4TINS-IN	FM-4QINS-IN
Hardware product installation for ES40 Pedestal System	FM-4FINS-IN	FM-4GINS-IN

Add-on memory installation for ES40	FM-64MEM-IN
Add-on SMP CPU installation for ES40	FM-64CPU-IN

NOTE: Add-on installation part numbers should be used when options are added to existing systems.

Hardware—Europe Only

- Europe does not offer specific part numbers for Hardware Supplemental Support Services. Prices are quoted based on worldwide service reference pricing. Contact MCS Sales in your country for information on Hardware Supplemental Support Services.

Technical Specifications

Tower Configuration	**Dimensions** (H x W x D)	20 x 15.25 x 31 in/50.8 x 38.7 x 78.7 cm		
	Weight	Typical Configuration	144.3 lb/65.6 kg	
		Maximum Configuration	212.8 lb/96.7 kg	
	Shipping Weight	Typical Configuration	172 lb/78 kg	
		Maximum Configuration	242 lb/110 kg	
	Clearances		**Operating**	**Service**
		Front	29.5 in/75 cm	29.5 in/75 cm
		Rear	6 in/15 cm	29.5 in/75 cm
		Left Side	None	29.5 in/75 cm
		Right Side	None	None

Pedestal Configuration	**Dimensions** (H x W x D)	30.8 x 20 x 31.75 in/78.2 x 50.8 x 80.6 cm		
	Weight	Typical Configuration	280 lb/127 kg	
		Maximum Configuration	350 lb/159 kg	
	Shipping Weight	Nominal	328 lb/149 kg	
		Maximum	407 lb/185 kg	
	Clearances		**Operating**	**Service**
		Front	29.5 in/75 cm	29.5 in/75 cm
		Rear	6 in/15 cm	29.5 in/75 cm
		Left Side	None	None
		Right Side	None	29.5 in/75 cm

Rackmount System	**Dimensions** (H x W x D)	13.87 x 17.6 x 30.1 in/35.2 x 44.7 x 76.5 cm (fits 14 in [8U] standard RETMA cabinet)	
	Shipping Dimensions	28.8 x 24 x 40 in/73.2 x 60.7 x 101.6 cm	
	Weight	When lifting:	
		Nominal	110 lb/50 kg
		Maximum	167.2 lb/76 kg
		Total added to cabinet (brackets, slides, cables):	
		Nominal	130 lb/59 kg
		Maximum	202.4 lb/92 kg
	Shipping Weight	Nominal	158 lb/72 kg
		Maximum	233 lb/106 kg
	Clearances	**Operating**	**Service**
		See specific cabinet requirements	Minimum 4 ft/121.9 cm, 30 in/76.3 cm withdrawal on rails

Technical Specifications

Cabinet Configuration		**H9A10 M-Series**	**H9A15 M-Series**
	Dimensions (H x W x D) (Depth includes rear door extender)	67 x 23.6 x 41.5 in/ 170 x 60 x 105.4 cm	79 x 23.6 x 41.5 in/ 200 x 60 x 105.4 cm
	Shipping Dimensions	73 x 36 x 48 in/185.5 x 91.5 x 122 cm	85 x 36 x 48 in/216 x 91.5 x 122 cm
	Weight	Configuration dependent	Configuration dependent
	Shipping Weight	Nominal: 946 lb/430 kg Maximum: 1,375 lb/625 kg	Nominal: 1,056 lb/550 kg Maximum: 1,408 lb/640 kg

System Unit	**ENVIRONMENTAL**			
	Temperature	Operating (Tower, Pedestal, Rackmount)	50° to 95° F/10° to 35° C	
		NOTE: Maximum operating temperature at sea level; reduce by 1.8° F (1° C) for each 2,000 ft (600 m) above sea level.		
		Non-operating	–40° to 151° F/–40° to 66° C	
		Storage (60 days)	–40° to 151° F/–40° to 66° C	
		Rate of change	20°F/hr/11°C/hr	
	Relative Humidity	Operating	20% to 80%	
		Non-operating	20% to 80%	
		Storage (60 days)	10% to 95%	
		Rate of change	20% hr	
	Maximum Wet Bulb Temperature	Operating	82° F/28° C	
		Storage (60 days)	115° F/46° C	
	Maximum Dew Point Temperature	Operating	36° F/2° C	
	Heat Dissipation		**Nominal**	**Maximum**
		Tower and Rack	900W, 3,074 BTU/hr	1300W, 4,440 BTU/hr
		Pedestal	1480W, 5,054 BTU/hr	2400W. 8,196 BTU/hr
		H9A10/H9A15 Cabinets	Configuration dependent	4800W, 16,392 BTU/hr
	Air Flow and Quality	Intake location	Front	
		Exhaust location	Rear Tower, Pedestal, Rack; Rear/top H9A10/H9A15	
		Particle size	N/A	
		Concentration	N/A	
	Altitude	Operating	10,000 ft/3,048 m	
		Non-operating	40,000 ft/12,192 m	
		NOTE: Higher altitudes are possible if maximum operating temperature is reduced (see Temperature); other restrictions may apply such as maximum permissible altitude for hard drives.		

Technical Specifications

System Unit *(continued)*

ACOUSTICS (Declared values per ISO 9296 and ISO 7779)

Acoustics		L_{WAd3}B	L_{nAm5}dBA (bystander position)
	Idle	6.6	48
	Operating	6.6	48
	NOTE: Current values for specific configurations are available from Compaq, note that 1 B = 10 dBA.		
Vibration	Operating	10 to 500 Hz 0.1 G peak	
	Non-operating	1.03 Grms 5-300 Hz	

ELECTRICAL (Power supplies are universal, PFC, auto ranging, 100/240 VAC)

Nominal Voltage (VAC)	100		120		200 to 240
Voltage Range (VAC) (temporary condition)	90 to 100		110 to 128		180 to 250
Power Source Phase	Single		Single		Single
Nominal Frequency (Hz)	50/60		50/60		50/60
Frequency Range (Hz)	49 to 51/59 to 61		49 to 51/59 to 61		49 to 51/59 to 61
RMS Current (maximum steady state)	*Tower and Rackmount*	Single power cord	11.0A	8.5A	5.0A
		Multiple power cords	6.5A	5.3A	3.0A
		Maximum VA	1,300	1,270	1,250
	Pedestal	Each power cord	12.0A	10.5A	6.0A
		Maximum VA	1,960	1,900	1,880
	M-series Cabinet (configuration dependent)	Nominal voltage (VAC)	100	120	220 to 240
		Each power cord	24A	24A	16A
Power Cords	Tower		Up to 3 (75 in/190 cm)		IEC 320 C13 to NEMA 5-15 (N. America) or IEC 320 C13 to country-specific
	Pedestal		2 (75 in/190 cm)		120V non-removable NEMA 5-15 (North America) or 200-240V IEC 320 C13 to country-specific
	Rackmount		3 (14 ft 10 in/52 cm)		IEC 320 C13 to NEMA 5-15 (North America) or IEC 320 C13 to IEC 320 C14 (other countries)
	Cabinet		2 (10 ft 10 in/30 cm)		120V non-removable NEMA L5-30P or 200-240V non-removable IEC 309

Technical Specifications

System Unit ***(continued)***	**ELECTRICAL** (Power supplies are universal, PFC, auto ranging, 100/240 VAC) ***(continued)***		
	Regulatory	Agency Approvals	UL: Listed to UL1950 (third edition)
			CSA: Certified to CAN/CSA-C22.2 No. 950-M95
			TUV: EN 60950/A4: 1997 VDE 0805 GS marked
			FCC: Part 15.B Class A
			CE: EN55022, EN50082
			VCCI Class II ITE
			BCIQ: CISPR22, CNS13438
			C-Tick: CISPR22, AS/NZS 3548
		Reviewed to	AS/NZ 3260:1993 Australian/New Zealand Standard
			EN 60950/A4: 1997 European Norm
			IEC 950 (second edition, third amend)

© 2002 Compaq Information Technologies Group, L.P. All rights reserved.
Compaq, the Compaq logo, AlphaServer, AlphaStation, Compaq Insight Manager, and StorageWorks are trademarks of Compaq Information Technologies Group, L.P. in the U.S. and/or other countries. All other product names mentioned herein may be trademarks of their respective companies.

Compaq shall not be liable for technical or editorial errors or omissions contained herein. The information is provided "as is" without warranty of any kind and is subject to change without notice. The warranties for Compaq products are set forth in the express limited warranty statements accompanying such products. Nothing herein should be construed as constituting an additional warranty.