Overview

At A Glance

AlphaServer/AlphaStation ES40 Linux-Ready Systems include:

- Alpha 21264 6/500-MHz CPU with 4-MB L2 Late Write Cache, 67/667-MHz CPU with 8-MB L2 Dual Data Rate Cache, or 68/833-MHz CPU with 8-MB L2 Dual Data Rate Cache
- Six 64-bit PCI I/O expansion slots
- 512-MB memory option
- 1.44-MB diskette drive
- 600-MB 40X IDE CD-ROM drive
- Two 9-pin serial ports
- One 25-pin parallel port
- RMC dedicated serial port, 6-pin MMJ connector
- Dual USB ports
- Keyboard and mouse port
- Knockouts for two 68-pin SCSI connections
- Auto-sensing power supply
- U.S. English keyboard with North America orders
- 3-button mouse
- Integral remote system management console
- Customer documentation
- Protected by Compaq Services, including three-year hardware warranty, on-site with 5 x 9 next business day response

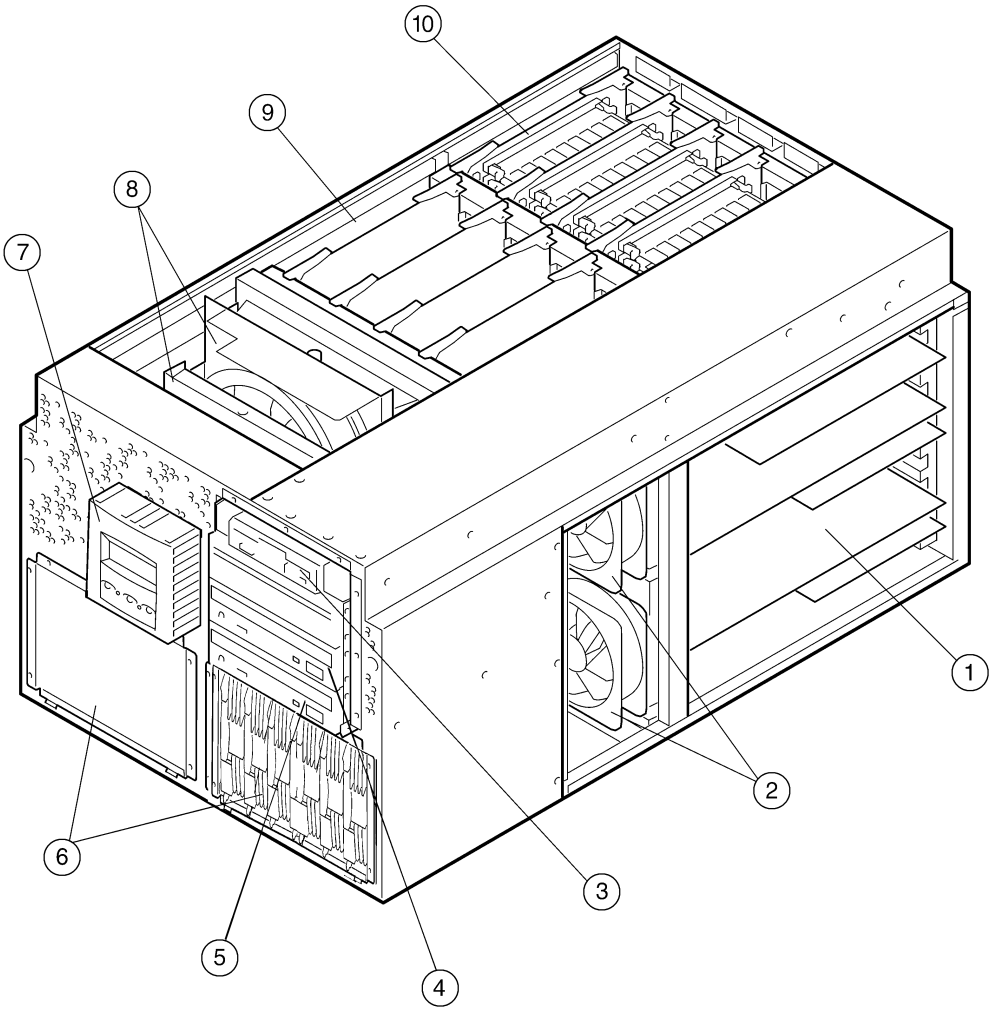

1. PCI cards
2. Fans
3. Diskette drive
4. Removable media bays
5. CD-ROM drive
6. 6-bay disk drive storage cages
7. Control panel
8. Fans
9. CPUs
10. Memory

Standard Features

Processor	Alpha 21264 6/500-MHz CPU, 67/667-MHz CPU, or 68/833-MHz CPU	
Cache Memory	4-MB L2 Late Write Backup Cache 8-MB MB L2 Dual Data Rate Backup Cache (67/667-MHz CPU, 68/833-MHz CPU)	
Upgradability	Supports additional processors and upgrades of memory and hard drives	
Memory	Minimum	512 MB
	Maximum	32 GB (see Step 3)
Network Controller	Choice of Ethernet controllers	
Expansion	PCI I/O slots	6
Storage	Diskette Drive	1.44-MB diskette drive in dedicated slot
	CD-ROM	600-MB 40X IDE CD-ROM
	Hard Drives	Choice of 9.1-GB, 18.2-GB, or 36.4-GB drives
Interfaces	Parallel	1 25-pin parallel port
	Serial	2 9-pin serial ports
	USB	Dual USB ports
	Keyboard	1
	Mouse	1
	Remote systems management	1 dedicated remote systems management port
	SCSI connections	Two 68-pin SCSI connections knockouts
Graphics	Optional	
Form Factor	Tower, Pedestal, Rackmount (M-Series Cabinet)	
Power Supply	Auto sensing power supply, hot swappable, N+1 (see Step 4)	
Service and Support	Protected by Compaq Services including a 3-year on-site hardware warranty with next business day response. Software warranty is a 90-day telephone advisory. Training, consulting, network integration, software support, comprehensive system maintenance and guaranteed uptime services are also available for customers requiring higher levels of service and support.	

Systems/Options

Step 1 – Select system

AlphaServer ES40 systems require the **mandatory** selection of the following items:

- Disk drive cage or StorageWorks shelf (Step 5)
  - Disk drive cage (BA610-6D) requires mandatory selection of Ultra2 SCSI LVD storage adapter (3X-KZPCA-AA)
  - StorageWorks shelf requires UltraSCSI adapter and SCSI cable (Step 10)
- System disk drive (Step 5)
- Ethernet adapter (Step 7)
- Tower, Pedestal, or Rack Kit (Step 8)
- Non-North American systems require country-specific keyboard (Step 16); North American systems include U.S. English keyboard

Notes: ES40 Model 1 to Model 2 Upgrade Kit available – see Step 16.
For system integration of options with 6-3 part numbers, contact *Custom*Systems.

AlphaServer ES40 Systems				
ES40	**CPU**	**PCI I/O Slots**	**Memory / Cache**	**Order No.**
Model 1	500 MHz	6	512 MB / 4 MB	DJ-62AAA-CA
Model 1	667 MHz	6	512 MB / 8 MB	DJ-62BAA-CA
Model 1	667 MHz	6	1 GB / 8 MB	DJ-62BAA-DA
Model 1	667 MHz	6	2 GB / 8 MB	DJ-62BAA-EA
Model 2	667 MHz	10	1 GB / 8 MB	DJ-64BAA-DA
Model 2	667 MHz	10	2 GB / 8 MB	DJ-64BAA-EA
Model 2	667 MHz	10	4 GB / 8 MB	DJ-64BAA-FA
Model 1	833 MHz	6	512 MB / 8 MB	DJ-62CAA-CA
Model 1	833 MHz	6	1 GB / 8 MB	DJ-62CAA-DA
Model 1	833 MHz	6	2 GB / 8 MB	DJ-62CAA-EA
Model 2	833 MHz	10	1 GB / 8 MB	DJ-64CAA-DA
Model 2	833 MHz	10	2 GB / 8 MB	DJ-64CAA-EA
Model 2	833 MHz	10	4 GB / 8 MB	DJ-64CAA-FA

AlphaStation ES40 Systems				
Model 1	667 MHz	6	512 MB / 8 MB	DJ-62BAA-BW
Model 2	667 MHz	10	512 MB / 8 MB	DJ-64BAA-CW
Model 2	833 MHz	10	512 MB / 8 MB	DJ-64CAA-CW

Step 2 – Additional CPU Modules –Optional

- One CPU included, three additional CPUs are supported

SMP upgrade includes one 6/500-MHz CPU with 4-MB cache	KN610-AA
SMP upgrade includes one 67/667-MHz CPU with 8-MB cache	KN610-BA
SMP upgrade includes one 68/833-MHz CPU with 8-MB cache	KN610-CA

Note: When upgrading to 68/833-MHz CPUs, all 67/667-MHz CPUs or all 6/500-MHz CPUs must be replaced; all CPU modules must be at the same speed. Additionally, when upgrading from 6/500-MHz to 67/667-MHz CPUs, the EV6 system (54-25385-01) must be at Rev E05 or higher. For Revisions lower than E05, contact Customer Services or 1-800-OK-COMPAQ (I-800-652-6672) and reference FCO #00-ES40 F002. Additionally, when upgrading to EV68, first upgrade the console firmware as outlined below:

From:	**To:**
EV67 667-MHz CPU	**EV68 833-MHz CPU**
	Upgrade console firmware to V5.9-24 as minimum revision
	Upgrade system hardware with EV68 CPUs
	Ensure all system firmware matches console version V5.9-24
EV6 500-MHz CPU	**EV68 833-MHz CPU**
	Upgrade console firmware to V5.9-24 as minimum revision
	Upgrade system hardware with EV68 CPUs
	Re-install V5.9-24 console firmware
	Ensure all system firmware matches console version V5.9-24

Options

Step 3 – Memory – Optional

- Systems include one memory option; maximum 16 GB Model 1 and 32 GB Model 2 (see Notes below)
- Memory performance considerations: Interleaved operations reduce the average latency and increase the memory throughput over non-interleaved operations. With one memory option (4 DIMMs) installed, memory interleaving will not occur. With two identical memory options (8 DIMMs) installed, memory read-write operations are two-way interleaved. For two-way interleaving, arrays 0 and 2 or arrays 1 and 3 must not be empty. For four-way interleaving, the total size of each array must be the same. Examples follow:

Array 0	Array 1	Array 2	Array 3
512 MB	512 MB	512 MB	512 MB = 4-way interleaving
X	X	X	X
Array 0	**Array 1**	**Array 2**	**Array 3**
512 MB	512 MB	512 MB	1 GB = 4-way interleaving
512 MB	512 MB	512 MB	X
Array 0	**Array 1**	**Array 2**	**Array 3**
512 MB	512 MB	1 GB	1 GB = 4-way interleaving
512 MB	512 MB	X	X
Array 0	**Array 1**	**Array 2**	**Array 3**
512 MB	512 MB	512 MB	1 GB = 2-way interleaving
512 MB	1 GB	512 MB	512 MB
Array 0	**Array 1**	**Array 2**	**Array 3**
512 MB	X	512 MB	1 GB = 2-way interleaving
512 MB	X	512 MB	512 MB
Array 0	**Array 1**	**Array 2**	**Array 3**
512 MB	X	512 MB	X = 2-way interleaving
X	X	X	X
Array 0	**Array 1**	**Array 2**	**Array 3**
512 MB	512 MB	X	X = 1-way interleaving
X	X	X	X

256-MB memory option (4x64-MB DIMMs) AlphaStations only	MS610-BA
512-MB memory option (4x128-MB DIMMs)	MS610-CA
1-GB memory option (4x256-MB DIMMs)	MS610-DA
2-GB memory option (4x512-MB DIMMs)	MS610-EA
4-GB memory option (4x1024-MB DIMMs)	MS610-FA

Notes: ES40 configurations that require maximum N+1 power (three power supplies) are restricted to a maximum of 24-GB of memory. If N+1 maximum power is not required, 32-GB of memory is supported. (This restriction expected to be removed by late Q4.)

The patch to support greater than 2-GB of memory per system is located at: http://www.kernel.org/pub/linux/kernel/people/andrea/patches/v2.2/2.2.17 (patch name: bigmem-2.2.18pre2-18.bz2)

The following minimum operating system versions require the patch:

- Linux RedHat V6.2
- Linux SuSE V6.3 (Kernel V2.2.17)

The following operating system minimum versions support greater than 2-GB of memory:

- Linux RedHat V7.0 (installs Kernel V2.2.17)
- Linux SuSE V7.0 (installs Kernel V2.2.16)

When installing Linux SuSE V7.0 on a system with more than 2-GB of memory, user will be prompted for a (ramdisk) floppy. To create a floppy:

- Mount the SuSE V7.0 installation CD-ROM #1 on the system.
- Mount a blank formatted floppy (if not formatted, execute the following command: fdformat/dev/fd0H1440).
- Change directory, to the “disks” directory on the install CD-ROM.
- Execute the following command to create the floppy contents: dd if=install of=/dev/fd0.

Use this floppy when prompted by the install procedure for a floppy.

Options

Step 4 – Additional Power Supplies – Required for third and fourth CPUs and/or second Disk Drive Cage

- One power supply supports two CPUs, up to 12 memory DIMMs, and one disk card cage; order second power supply if N+1 power is required.
- Two power supplies support third and fourth CPU, 13 to 32 memory DIMMs (up to 24-GB of memory), and/or two disk card cages; order third power supply if N+1 power is required for third and fourth CPUs, 24-GB of memory, and/or two disk card cages.
- Three power supplies support 32-GB of memory without N+1 power.
- Three power supplies support a maximum of 24-GB of memory with N+1 power. (This restriction expected to be removed by late Q4.)
- Each additional power supply ordered with a tower system requires an additional country-specific power cord
- Pedestal systems and Rack kit include three internal power cords regardless of the number of power supplies ordered.

ES40 720W power supply	H7906-A9

Step 5 – Disk Drive Cage or StorageWorks Shelf – Mandatory

- Tower enclosure supports one system and two disk drive cages
- Pedestal enclosure supports one system and two disk drive cages, two Universal 43xx StorageWorks shelves or three BA36R StorageWorks shelves
- M-Series cabinets support five systems each with two disk drive cages and up to six StorageWorks shelves

Step 5a – Disk Drive Cage – Requires selection of system disk drive

- Disk drive cage supports six 1.0" Universal disk drives per cage

6-bay disk drive cage with cable for use with 1.0" Universal drives – requires mandatory selection of LVD Ultra2 adapter (3X-KZPCA-AA) per disk drive cage	BA610-6D
6-bay disk drive cage with embedded Ultra2 LVD adapter; supports internal SCSI 1.0" universal drives or tapes only	BA610-6E

System Disk Drives *(Supported in Disk Drive Cage)*		
	9.1-GB Ultra3 SCSI 10,000 rpm 1.0″ Universal disk drive	3R-A0584-AA
	9.1-GB Ultra3 SCSI 15,000 rpm 1.0″ Universal disk drive	3R-A1542-AA
	18.2-GB Ultra3 SCSI 15,000 rpm 1.0″ Universal disk drive	3R-A1543-AA
	18.2-GB Ultra3 SCSI 10,000 rpm 1.0″ Universal disk drive	3R-A0585-AA
	36.4-GB Ultra3 SCSI 10,000 rpm 1.0″ Universal disk drive	3R-A0919-AA
	72.8-GB Ultra3 SCSI 10,000 rpm 1.0″ Universal disk drive	3R-A3050-AA

Step 5b – StorageWorks BA36R Shelf –Requires selection of UltraSCSI adapter and SCSI cable (Step 10) and system disk drive

- StorageWorks Shelf supports seven 3.5" x 1.6" hard disk drives; with addition of redundant power supply, only six drives are supported
- StorageWorks shelf kits are mounted back-to-back in pedestals and cabinets

StorageWorks UltraSCSI single-bus shelf kit	BA36R-RC
StorageWorks UltraSCSI split-bus shelf kit; Note: When ordering a split-bus shelf that will be mounted in a Pedestal Enclosure, order one BN37A-03 cable for KZPCM-DA, or one BN38C-03 cable for 3X-KZPCA-AA or KZPBA-CA	BA36R-RD
3-m SCSI cable	BN37A-03

System Disk Drives *(Supported in StorageWorks BA36R Shelf)*		
	9.1-GB Ultra2 SCSI 7,200 rpm disk drive	DS-RZ1DA-VW
	9.1-GB Ultra3 SCSI 10,000 rpm disk drive	DS-RZ1DD-VW
	18.2-GB Ultra2 SCSI 7,200 rpm disk drive	DS-RZ1EA-VW
	18.2-GB Ultra3 SCSI 10,000 rpm disk drive	DS-RZ1ED-VW
	36.4-GB Ultra2 SCSI 7,200 rpm disk drive	DS-RZ1FB-VW
	36.4-GB Ultra3 SCSI 10,000 rpm disk drive	DS-RZ1FC-VW

Options

Step 5 – Disk Drive Cage or StorageWorks Shelf – Mandatory *(continued)*

Step 5c – StorageWorks Model 4314R and Model 4354R Universal Drive Shelves

	StorageWorks Model 4314R, 4354R Ultra2 SCSI (LVD) single-bus and split-bus Universal drive shelves; refer to Compaq StorageWorks Enclosure 4300 Family QuickSpecs when configuring shelves. When selecting a DS-SL13R-split-bus shelf, order two 3X-KZPCA-AA adapters with BN38C-xx cables. Model 43xx enclosures are compatible with Wide Ultra2 (LVD) adapters only. Note that the depth of a DS-SL13R-xx shelf does not allow front and rear mounting.	
	StorageWorks Model 4314R Ultra3 SCSI (LVD) single-bus Universal drive rackmount shelf, US	DS-SL13R-AA (190209-001)
	StorageWorks Model 4314R Ultra3 SCSI (LVD) single-bus Universal drive rackmount shelf, International (requires international power cord)	DS-SL13R-AB (190209-B31)
	StorageWorks Model 4314R Ultra3 SCSI (LVD) single-bus Universal drive rackmount shelf, Japan	DS-SL13R-AJ (190209-291)
	StorageWorks Model 4354R Ultra3 SCSI (LVD) split-bus Universal drive rackmount shelf, US	DS-SL13R-BA (190211-001)
	StorageWorks Model 4354R Ultra3 SCSI (LVD) split-bus Universal drive rackmount shelf, International (requires international power cord)	DS-SL13R-BB (190211-B31)
	StorageWorks Model 4354R Ultra3 SCSI (LVD) split-bus Universal drive rackmount shelf, Japan	DS-SL13R-BJ (190211-291)

International Power Cords (For internal connection from power strip to Universal shelves)	IEC-320, 19-inch power cord	BC25Y-1G
	IEC-320, 60-inch power cord	BC25Y-05
	IEC-320, 80-inch power cord	BC25Y-6H
	IEC-320, 100-inch power cord	BC25Y-8D
	IEC-320, 120-inch power cord	BC25Y-10
	IEC-320, .5-meter power cord	BN35S-0E
	IEC-320, 1.5-meter power cord	BN35S-1E
	IEC-320, 3-meter power cord	BN35S-03

StorageWorks Model 4314T Standalone Enclosure for Universal Drives	Model 4314T Ultra3 SCSI, single-bus tower enclosure, US	DS-SL13T-AA
	Model 4314T Ultra3 SCSI, single-bus tower enclosure, International	DS-SL13T-AB
	Model 4314T Ultra3 SCSI, single-bus tower enclosure, Japan	DS-SL13T-AJ

System Disk Drives *(Supported in Model 4314R and 4354R Universal Drive Shelves)*	9.1-GB Ultra3 SCSI 10,000 rpm 1.0″ Universal disk drive	3R-A0584-AA
	9.1-GB Ultra3 SCSI 15,000 rpm 1.0″ Universal disk drive	3R-A1542-AA
	18.2-GB Ultra3 SCSI 10,000 rpm 1.0″ Universal disk drive	3R-A0585-AA
	18.2-GB Ultra3 SCSI 15,000 rpm 1.0″ Universal disk drive	3R-A1543-AA
	36.4-GB Ultra3 SCSI 10,000 rpm 1.0″ Universal disk drive	3R-A0919-AA
	72.8-GB Ultra3 SCSI 10,000 rpm 1.0″ Universal disk drive	3R-A3050-AA

Step 6 – Internal Removable Media –Optional

- System supports four internal removable devices
- System includes 1.44-MB diskette drive
- System includes 5.25″ half-height 600-MB 40X IDE CD-ROM
- Removable media slots provide support for two 5.25″ half-height devices, or one 5.25″ full-height removable media device

5.25″ half-height 12/24-GB 4mm DAT SCSI tape drive, top gun blue; requires single-ended UltraSCSI adapter (KZPBA-CA or KZPCM-DA) and SCSI cable (3X-BN46M-01)	TLZ10-LB
5.25" half-height 2-GB QIC tape drive, top gun blue; requires single-ended UltraSCSI adapter (KZPBA-CA or KZPCM-DA) and SCSI cable (3X-BN46M-01)	PBXTZ-AA
1-m Ultra2 68-pin LVD cable with two connectors, multimode terminator and two wide-to-narrow adapters (for connection of 50-pin narrow devices)	3X-BN46M-01

Options

Step 7 – Ethernet Adapters – Mandatory

- Each adapter uses one PCI slot

PCI 1-port 32-bit 10/100-Mb single-channel UTP Fast Ethernet adapter (Twisted Pair) maximum four per system	3X-DE600-AA
Cable for 10BaseT twisted pair connection	BN25G-xx
PCI to 10/100/1000 UTP Ethernet adapter, maximum four per system; no network boot support; for multiple adapters set console variable BOOT_RESET to YES and console firmware to V6.0	DEGPA-TA

Step 8 – System Enclosures –Mandatory selection of Tower, Pedestal, or Rack Kit

Step 8a – Tower Enclosure

- Tower enclosure supports one system
- Tower enclosure ordered in North America includes 120V power cord; country-specific power cord mandatory for all non-North American systems; additional power cord mandatory for each power supply ordered with a system installed in a tower enclosure

Tower enclosure	BA61M-MT

Step 8b – Pedestal Enclosure

- Pedestal enclosure supports one system, two Universal 43xx StorageWorks shelves (Universal shelves require onsite installation) or three UltraSCSI BA36R StorageWorks shelves
- Pedestal enclosures (BA61P-PA, 120V / BA61P-PB, 240V) support Universal shelves
- 120V pedestal enclosure includes two external 120V power cords; 240V pedestal enclosure requires two country-specific power cords

Pedestal enclosure, 120V	BA61P-PA
Pedestal enclosure, 240V	BA61P-PB

Step 8c – Rack Kit for M-Series Cabinet

- Rack kit required for each AlphaServer ES40 system installed in a new or existing M-Series Cabinet
- Rack kit supports one system

Rack kit for AlphaServer ES40, includes dress bezel, slides, three internal power cords, all bracketry and hardware for mounting in M-Series Cabinets	BA61R-RM

Note: Factory integration of an ES40 system drawer in a Compaq 9000 rackmount cabinet using rack kit, 3X-BA61R-RC, is not supported. Contact CustomSystems or a Compaq Certified Integration Partner.

Options

Step 9 – M-Series Cabinets

M-Series cabinet enclosures support up to four systems, up to six StorageWorks shelves, and/or two BA370 enclosures; M-series Enclosures require selection of the following items:

- H9A10 or H9A15 cabinet, 120V or 240V
- Rack kit for each system
- H9A10 or H9A15 rear cabinet extender
- Cabinet front door based on cabinet height
- Factory integration
- Ballast kit if only one system is ordered for the H9A15 cabinet

Note: For configurations beyond those listed in the following charts, contact CustomSystems.

Cabinet Configuration Chart for AlphaServer ES40 (8U) with StorageWorks Shelves (4U)

Cabinet	Rack Kit	Cabinet Extender	Cabinet Height/Space	Systems	BA356 Shelves	DS-S L13R 120V Shelves[2]	BA356/ DS-SL13R[3]	
							BA356	DS-SL13R
H9A10-MC/MD[1]	BA61R-RM	H9C10-TE	56″/32U	1	6	8	6	4
				2	6	5	6	1
				3	2	2	4	0
				4[1]	0	0	0	0
H9A15-MC/MD[4]	BA61R-RM	H9C15-TE	68.25″/39U	1	6	8	6	5
				2	6	5	6	2
				3	6	2	6	0
				4	2	0	2	0
				5[5]	0	0	0	0

Notes:

1. Contact Compaq *Custom*Systems for cabinet configurations with four ES40 systems installed in an H9C10-MC/MD cabinet.
2. Japan only – 240V cabinet required when using universal shelves
3. When using a combination of BA356 and DS-SL13R shelves in cabinet, do not remove top fan, only remove fan when using DS-SL13R shelves exclusively (Universal shelves require onsite installation).
4. Installation of one AlphaServer ES40 system in an H9A15 cabinet requires the mandatory selection of a ballast kit.
5. When adding the 5th system drawer, replace H7600-AA or -DB power controller with H7602-EA or -DB power controller. When replacing H7600 controllers, replace all associated power cords; order BN35S-4E power cords for H7602-EA and H7602-DB power controllers.

M-Series Cabinets	Requires selection of one cabinet	
	• Two H7600-xx power distribution units are standard in the M-series cabinet	
	• For cabinet configurations that require a third power distribution unit (H7600-xx), contact Compaq CustomSystems at 1-800-AT-COMPAQ	
	67-inch cabinet with 56-inch or 32U of usable vertical space, 120V dual-24A controller, each with 10 NEMA 5-15R outlets, input power plug NEMA L5-30P, Americas, Asia Pacific; includes rear door and top fan tray	H9A10-MC
	67-inch cabinet with 56-inch or 32U of usable vertical space, 240V dual-16A controller, each with 12 IEC C13 outlets, input power plug IEC 309, 16A, Europe; includes rear door and top fan tray	H9A10-MD
	79-inch cabinet with 68.25-inch or 39U of usable vertical space, 120V dual-24A controller, each with 10 NEMA 5-15R outlets, input power plug NEMA L5-30P, Americas, Asia Pacific; includes rear door and top fan tray	H9A15-MC
	79-inch cabinet with 68.25-inch or 39U of usable vertical space, 240V dual-16A controller, each with 12 IEC C13 outlets, input power plug IEC 309, 16A, Europe; includes rear door and top fan tray	H9A15-MD

Options

Step 9 – M-Series Cabinets *(continued)*

Rear Cabinet Extender	Required selection of one cabinet extender for each H9A10 or H9A15 cabinet	
	Rear cabinet extender, top gun blue, for H9A10-MC/MD cabinets	H9C10-TE
	Rear cabinet extender, top gun blue, for H9A15-MC/MD cabinets	H9C15-TE
Cabinet Front Door	Required selection of door based on cabinet height	
	Front door, top gun blue, for H9A10-MC/MD cabinet enclosure	H9C10-TF
	Front door, top gun blue, for H9A15-MC/MD cabinet enclosure	H9C15-TF
Factory Integration	Required	
	Factory Integration of systems and storage devices assembled and configured in cabinet enclosure in predefined locations	YS-ASCAA-AA
Ballast Kit	Required only if one system is ordered for the H9A15 cabinet	
	Ballast is added to a cabinet at particular locations for specific configurations to meet safety regulations for installation, operation, and service; see Cabinet Configuration Charts.	
	Two 35-40 lb steel plates	H9C10-MC
Shelves Supported in M-series Cabinets	Optional	
	UltraSCSI single-ended RETMA rack, single-bus personality module, 180W power supply	BA36R-RC
	UltraSCSI single-ended RETMA rack, split-bus personality module, 180W power supply	BA36R-RD
Power Supply	180W power supply, includes 120V North American and 240V IEC power cord	DS-BA35X-HH

Step 10 – Storage Adapters – Required if StorageWorks shelf is selected in Step 5

	Note: The following adapter is mandatory for use with the BA610-6D 6-bay disk drive cage.	
	PCI 1-port Ultra2 (LVD) SCSI adapter, 32-bit, single-channel (uses one PCI slot); includes internal 68-pin and external 68-pin HD connectors; requires BN38C-xx cable to connect adapter to Ultra2 shelf; HSZxx RAID controllers not supported.	3X-KZPCA-AA
	68-pin HD male-to-VHDCI male UltraSCSI cable; xx = 02, 03, 05, 10, 20, 25 m	BN38C-xx
	Note: The following adapters are only supported with StorageWorks shelves; not supported with the BA610-6D disk drive cage.	
	PCI 1-port UltraSCSI differential adapter (uses one PCI slot); includes external 68-pin HD connector, requires BN38C-xx cable to connect adapter to shelf or RAID controller, maximum five per system	KZPBA-CB
	68-pin HD male-to-VHDCI male UltraSCSI cable; xx = 02, 03, 05, 10, 20 m	BN38C-xx
	PCI 1-port Ultra SCSI RAID controller with 4-MB cache; maximum four per system; supports disk drives only and external support only in BA356 StorageWorks shelves	SN-KZPBC-AA
	PCI 3-port Ultra SCSI RAID controller with 32-MB cache; maximum four per system; supports disk drives only and external support only in BA356 StorageWorks shelves	FR-PCTAR-IB
	PCI 3-port Ultra SCSI RAID controller with 64-MB cache; maximum four per system; supports disk drives only and external support only in BA356 StorageWorks shelves	FR-PCTAR-IC

Options

Step 10 – Storage Adapters – Required if StorageWorks shelf is selected in Step 5 *(continued)*

Step 10a – Storage Adapters (Optional)

	PCI-to-Fibre Channel adapter, 64-bit, single-channel (uses one PCI slot); includes cable to HSG80 controller; requires Linux RedHat V6.2 and Linux SuSE V6.3, maximum three per system; for more information refer to http://www.compaq.com/products/storageworks/adapters/fchba-linux.html	DS-SWLA4-PD

Step 11 – Storage Devices – Optional

DLT Tape Drives	DLT8000 40/80-GB DLT external tabletop tape drive (supports Linux RedHat V6.2, EV6 only)	146197-B21
	DLT8000 40/80-GB DLT external tabletop tape drive (supports Linux RedHat V6.2, EV6 only) – Japan only	146197-291
	DLT8000 40/80-GB DLT tape drive, SBB	DS-TZ90N-VW
AIT Tape Drives	35/70-GB AIT hot plug LVD Universal tape drive, uses two slots in BA610-6D or 43xxx shelves	3R-A2396-AA
	50/100-GB AIT hot plug LVD Universal tape drive, uses two slots in BA610-6D or 43xxx shelves	3R-A2779-AA
DAT Drive	20/40-GB DAT DDS4 hot plug LVD Universal tape drive, uses two slots in BA610-6D or 43xxx shelves	3R-A2780-AA

Step 12 – Graphics Adapters – Optional

	• Select graphics adapter, monitor, and country-specific keyboard if required	
	3Dlabs Oxygen VX1 32-MB PCI 2D graphics accelerator; maximum one per system	SN-PBXGF-AB

Step 13 –Monitors –Optional

- Graphics monitors other than those listed can be used if compatible with SVGA graphics ordered with system
- Video extension cable required if monitor is located more than 1 meter from server
- Monitors will ship with, but not be integrated with systems.

V570 15-inch (13.8-inch viewable image size) multiple-scan color monitor with Invar Shadow Mask, VGA to 1024 x 768 @ 75 Hz, 0.28mm AG, TCO99; Northern Hemisphere with NA power cord	3R-A3082-AA
Same as above with Eurocord	3R-A3083-AA
Same as above, APD, no power cord	3R-A3084-AA
P710 17-inch (16-inch viewable image size) auto-scanning color monitor, Diamondtron NF, 0.25mm aperture grille pitch, VGA to 1280 x 1024 @ 75 Hz, TCO 99; Northern Hemisphere with NA power cord	3R-A2936-AA
Same as above, APD, no power cord	3R-A2260-AA
Same as above, PRC with power cord, CCIB	3R-A3335-AA
Same as above, Southern Hemisphere, with Australia/New Zealand power cord	3R-A2263-AA
Same as above, Northern Hemisphere, with Power Factor Correction and Eurocord, 220V only	3R-A2261-AA
TFT8020 18-inch (18.1-inch viewable image size) flat panel monitor, 0.28mm DP, 1280x 1024 @75 Hz, TCO 99, U.S. power cord (requires SN-PBXGK-BB ELSA Gloria graphics adapter)	3R-A0852-AA

Options

Step 13 –Monitors –Optional *(continued)*

	P910 19-inch (18-inch viewable image size) auto-scanning color monitor, Diamondtron NF, 0.25mm aperture grille pitch, VGA to 1280 x 1024 @ 85 Hz, TCO 99; Northern Hemisphere with NA power cord	3R-A2935-AA
	Same as above, PRC with power cord, CCIB	3R-A3334-AA
	Same as above, Southern Hemisphere with Australia/New Zealand power cord	3R-A2267-AA
	Same as above, Northern Hemisphere, with Power Factor Correction and Eurocord, 220V only	3R-A2265-AA
	P1100 21-inch (19.8-inch viewable image size) auto-scanning color monitor, Trinitron, 0.28mm aperture grille pitch, VGA to 1600 x 1200 @ 85 Hz, TCO 99 with Australia/New Zealand power cord	3R-VRQP1-23
	P1210 22-inch (20-inch viewable image size) auto-scanning color monitor, Diamondtron NF, 0.24mm aperture grille pitch, VGA to 1600 x 1200 @ 85 Hz, TCO 99 with power factor correction, Northern Hemisphere with NA power cord	3R-A2934-AA
	Same as above with Eurocord	3R-VRQP2-24
	Same as above, APD, no power cord	3R-A2268-AA
	Same as above, PRC with power cord, CCIB	3R-A3333-AA
Video Extension Cable	1.8-meter video extension cable – optional	BN39C-02
Monitor Power Cords	North American, 120V, 75-inch	BN26J-1K
	Australia, New Zealand, 2.5-meter	BN19H-2E
	Central Europe, 2.5-meter	BN19C-2E
	Denmark, 2.5-meter	BN19K-2E
	Egypt, India, South Africa, 2.5-meter	BN19S-2E
	Israel, 2.5-meter	BN18L-2E
	Italy, 2.5-meter	BN19M-2E
	Japan, 2.5-meter, Dentori approved	3X-BN46F-02
	Switzerland, 2.5-meter	BN19E-2E
	UK, Ireland, 2.5-meter	BN19A-2E

Options

Step 14 – Keyboards, Power Cords, Documentation

Step 14a – Keyboards – Required for all non-North American systems

- Systems ordered in North America include U.S. English keyboard; selection of country-specific keyboard is mandatory for all non-North American systems

U.S./English keyboard	SN-LKQ47-AA
Arabic keyboard	SN-LKQ47-BR
Belgian keyboard	SN-LKQ47-AB
BHCSY keyboard	SN-LKQ47-AX
Canadian/French keyboard	SN-LKQ47-AC
Cyrillic keyboard	SN-LKQ47-BT
Czech keyboard	SN-LKQ47-BV
Danish keyboard	SN-LKQ47-AD
Dutch keyboard	SN-LKQ47-AH
Finnish keyboard	SN-LKQ47-AF
French keyboard	SN-LKQ47-AP
German keyboard	SN-LKQ47-AG
Greek keyboard	SN-LKQ47-BH
Hebrew keyboard	SN-LKQ47-AT
Hungarian keyboard	SN-LKQ47-BQ
International keyboard	SN-LKQ47-BA
Italian keyboard	SN-LKQ47-AI
Korean keyboard	SN-LKQ47-BK
Latin-American keyboard	SN-LKQ47-AR
Norwegian keyboard	SN-LKQ47-AN
Polish keyboard	SN-LKQ47-BP
Portuguese keyboard	SN-LKQ47-AV
S. Chinese keyboard	SN-LKQ47-CV
Slovak keyboard	SN-LKQ47-CZ
Spanish keyboard	SN-LKQ47-AS
Swedish keyboard	SN-LKQ47-AM
Swiss/French keyboard	SN-LKQ47-AK
Taiwanese keyboard	SN-LKQ47-BI
Thai keyboard	SN-LKQ47-CB
Turkish keyboard	SN-LKQ47-BU
UK keyboard	SN-LKQ47-AE

Keyboard or Mouse Extension Cable	6-foot keyboard or mouse extension cable; to extend both keyboard and mouse order two cables	3X-BC34A-06

Step 14b – Power Cords

Tower Power Cords

- Tower enclosure ordered in North America includes 120V power cord; selection of country-specific power cord is mandatory for all non-North American orders.
- Each additional power supply ordered with a system installed in tower enclosure requires an additional power cord

Options

Step 14 – Keyboards, Power Cords, Documentation *(continued)*

Step 14b – Power Cords *(continued)*

Pedestal Power Cords

- Pedestal systems ordered in North America include two 120V power cords; selection of two country-specific power cords is mandatory for all non-North American orders.

North American 120V, 75-inch	BN26J-1K
Australia, New Zealand, 2.5-meter	BN19H-2E
Central Europe, 2.5-meter	BN19C-2E
Denmark, 2.5-meter	BN19K-2E
Egypt, India, South Africa, 2.5-meter	BN19S-2E
Israel, 2.5-meter	BN18L-2E
Italy, 2.5-meter	BN19M-2E
Japan, 2.5-meter	3X-BN46F-02
Switzerland, 2.5-meter	BN19E-2E
UK, Ireland, 2.5-meter	BN19A-2E

Step 14c – Documentation

Additional AlphaServer ES40 System Information Kit (print and CD), Owners Guide, User Interface Guide, and Release Notes	QA-6E88A-G8

Step 15 – Console Terminal –Optional

- Any terminal can be used as a console device
- Third-party console devices require an EIA-232 25-pin DSUB connector

VT510 video terminal; requires keyboard, H8575-x adapter and BC16E cable	VT510-xx
Console cable, female connector (25-pin passive adapter)	H8575-A
Console cable, male connector (adapter with EOS, ESD 25 POS D-SUB)	H8575-D

Step 16 – Upgrade Kit –Optional

Upgrades ES40 Model 1 with six I/O slots and support for four memory options to ES40 Model 2 with 10 I/O slots and support for eight memory options	3X-KFPPA-AA

Step 17 – Software

- Operating system software not included with these systems.

Options

Step 18 – Hardware Supplemental Support Services – Optional

Hardware—Americas and Asia Pacific Only

- Systems include three-year hardware warranty, onsite with 5 x 9, 24-hour response time
- Options ordered as part of initial system sale take on warranty of the enclosure
- Options added after initial system sale take on warranty of the enclosure until enclosure warranty ends
- All unique ES40 options have a minimum of one-year Return to Compaq Warranty
- Select optional Hardware Supplemental Support Services if required

Supplemental Service for ES40 Tower System	**Model 1**	**Model 2**
3-year, 5 x 9, 4-hour response time	FM-4T4HR-36	FM-4Q4HR-36
5-year, 5 x 9, 4-hour response time	FM-4T4HR-60	FM-4Q4HR-60
3-year, 7 x 24, 4-hour response time	FM-4T724-36	FM-4Q724-36
5-year, 7 x 24, 4-hour response time	FM-4T724-60	FM-4Q724-60
5-year, 5 x 9, next day, on-site	FM-4TXHW-60	FM-4QXHW-60
Supplemental Service for ES40 Pedestal System	**Model 1**	**Model 2**
3-year, 5 x 9, 4-hour response time	FM-4F4HR-36	FM-4G4HR-36
5-year, 5 x 9, 4-hour response time	FM-4F4HR-60	FM-4G4HR-60
3-year, 7 x 24, 4-hour response time	FM-4F724-36	FM-4G724-36
5-year, 7 x 24, 4-hour response time	FM-4F724-60	FM-4G724-60
5-year, 5 X 9, next day, on-site	FM-4FXHW-60	FM-4GXHW-60
Installation Services	**Model 1**	**Model 2**
Hardware product installation for ES40 Tower System	FM-4TINS-IN	FM-4QINS-IN
Hardware product installation for ES40 Pedestal System	FM-4FINS-IN	FM-4GINS-IN

Add-on memory installation for ES40	FM-64MEM-IN
Add-on SMP CPU installation for ES40	FM-64CPU-IN

Note: Add-on installation part numbers should be used when options are added to existing systems.

Hardware—Europe Only

- Europe does not offer specific part numbers for Hardware Supplemental Support Services. Prices are quoted based on worldwide service reference pricing. Contact MCS Sales in your country for information on Hardware Supplemental Support Services.

Technical Specifications

Tower Configuration	**Dimensions** (HxWxD)	20 x 15.25 x 31 in / 50.8 x 38.7 x 78.7 cm	
	Shipping Dimensions	32.2 x 24 x 40 in / 82.48 x 60.2 x 101.6 cm	
	Weight	Typical Configuration	144.3 lbs/65.6 kg
		Maximum Configuration	212.8 lbs/96.7 kg
	Shipping Weight	Typical Configuration	172 lbs/78 kg
		Maximum Configuration	242 lbs/110 kg
	Clearances	**Operating**	**Service**
	Front	29.5 in/75 cm	29.5 in/75 cm
	Rear	6 in/15 cm	29.5 in/75 cm
	Left Side	None	29.5 in/75 cm
	Right Side	None	None
Pedestal Configuration	**Dimensions** (HxWxD)	30.8 x 20 x 31.75 in/78.2 x 50.8 x 80.6 cm	
	Shipping Dimensions	42.4 x 39.5 x 23.9 in/107.7 x 100.3 x 60.7 cm	
	Weight	Typical Configuration	280 lbs/127 kg
		Maximum Configuration	350 lbs/159 kg
	Shipping Weight	Nominal	328 lbs/149 kg
		Maximum	407 lbs/185 kg
	Clearances	**Operating**	**Service**
	Front	29.5 in/75 cm	29.5 in/75 cm
	Rear	6 in/15 cm	29.5 in/75 cm
	Left Side	None	None
	Right Side	None	29.5 in/75 cm
Rackmount System	**Dimensions** (HxWxD)	13.87 x 17.6 x 30.1 in/35.2 x 44.7 x 76.5 cm (fits 14 in [8U] standard RETMA cabinet)	
	Shipping Dimensions	28.8 x 24 x 40 in/73.2 x 60.7 x 101.6 cm	
	Weight	When lifting:	
		Nominal	110 lbs/50 kg
		Maximum	167.2 lbs/76 kg
		Total added to cabinet (brackets, slides, cables):	
		Nominal	130 lbs/59 kg
		Maximum	202.4 lbs/92 kg
	Shipping Weight	Nominal	158 lbs/72 kg
		Maximum	233 lbs/106 kg
	Clearances	**Operating**	**Service**
		See specific cabinet requirements	Minimum 4 ft/121.9 cm, 30 in/76.3 cm withdrawal on rails
Cabinet Configuration		**H9A10 M-Series**	**H9A15 M-Series**
	Dimensions (HxWxD)	67 x 23.6 x 43.27 in/170 x 60 x 110 cm	79 x 23.6 x 35.4 in/200 x 60 x 90 cm
	Shipping Dimensions	73 x 36 x 48 in/185.5 x 91.5 x 122 cm	85 x 36 x 48 in/216 x 91.5 x 122 cm
	Weight	Configuration dependent	Configuration dependent
	Shipping Weight	Nominal: 946 lbs/430 kg Maximum: 1,375 lbs/625 kg	Nominal: 1,056 lbs/550 kg Maximum: 1,408 lbs/640 kg

Technical Specifications

System Unit

Environmental

Temperature	Operating (Tower, Pedestal, Rackmount)	50° to 95° F/10° to 35° C
	Note: Maximum operating temperature at sea level; reduce by 1.8° F (1° C) for each 2,000 ft (600 m) above sea level.	
	Non-operating	–40° to 151° F/–40° to 66° C
	Storage (60 days)	–40° to 151° F/–40° to 66° C
	Rate of change	20°F/hr/11°C/hr
Relative Humidity	Operating	20% to 80%
	Non-operating	20% to 80%
	Storage (60 days)	10% to 95%
	Rate of change	20% hr
Maximum Wet Bulb Temperature	Operating	82° F/28° C
	Storage (60 days)	115° F/46° C
Maximum Dew Point Temperature	Operating	36° F/2° C
Heat Dissipation	**Nominal**	**Maximum**
Tower and Rack	900W, 3,074 BTU/hr	1300W, 4,440 BTU/hr
Pedestal	1480W, 5,054 BTU/hr	2400W. 8,196 BTU/hr
H9A10/H9A15 Cabinets	Configuration dependent	4800W, 16,392 BTU/hr
Air Flow and Quality	Intake location	Front
	Exhaust location	Rear Tower, Pedestal, Rack; Rear/top H9A10/H9A15
	Particle size	N/A
	Concentration	N/A
Altitude	Operating	10,000 ft/3,048 m
	Non-operating	40,000 ft/12,192 m
	Note: Higher altitudes are possible if maximum operating temperature is reduced (see Temperature); other restrictions may apply such as maximum permissible altitude for hard drives.	

Acoustics (Declared values per ISO 9296 and ISO 7779)

Acoustics		
	L_{WAd3}B	L_{nAm5}dBA (bystander position)
Idle	6.6	48
Operating	6.6	48
	Note: Current values for specific configurations are available from Compaq, note that 1 B = 10 dBA.	
Vibration	Operating	10 to 500 Hz 0.1 G peak
	Non-operating	1.03 Grms 5-300 Hz

Technical Specifications

System Unit *(continued)*

Electrical (Power supplies are universal, PFC, auto ranging, 100/240 Vac)			
Nominal Voltage (Vac)	100	120	200 to 240
Voltage Range (Vac) (temporary condition)	90 to 100	110 to 128	180 to 250
Power Source Phase	Single	Single	Single
Nominal Frequency (Hz)	50/60	50/60	50/60
Frequency Range (Hz)	49 to 51/59 to 61	49 to 51/59 to 61	49 to 51/59 to 61
RMS Current (maximum steady state)			
Tower and Rackmount			
Single power cord	11.0A	8.5A	5.0A
Multiple power cords	6.5A	5.3A	3.0A
Maximum VA	1,300	1,270	1,250
Pedestal			
Each power cord	12.0A	10.5A	6.0A
Maximum VA	1,960	1,900	1,880
M-series Cabinet (configuration dependent)			
Nominal voltage (VAC)	100	120	220 to 240
Each power cord	24A	24A	16A
Power Cords			
Tower	Up to 3 (75 in/190 cm)	IEC 320 C13 to NEMA 5-15 (N. America) or IEC 320 C13 to country-specific	
Pedestal	2 (75 in/190 cm)	120V non-removable NEMA 5-15 (N. America) or 200-240V IEC 320 C13 to country-specific	
Rackmount	3 (14 ft 10 in/52 cm)	IEC 320 C13 to NEMA 5-15 (N. America) or IEC 320 C13 to IEC 320 C14 (other countries)	
Cabinet	2 (10 ft 10 in/30 cm)	120V non-removable NEMA L5-30P or 200-240V non-removable IEC 309	
Regulatory	Agency Approvals	UL: Listed to UL1950 (third edition)	
		CSA: Certified to CAN/CSA-C22.2 No. 950-M95	
		TUV: EN 60950/A4: 1997 VDE 0805 GS marked	
		FCC: Part 15.B Class A	
		CE: EN55022, EN50082	
		VCCI Class II ITE	
		BCIQ: CISPR22, CNS13438	
		C-Tick: CISPR22, AS/NZS 3548	
	Reviewed to	AS/NZ 3260:1993 Australian/New Zealand Standard	
		EN 60950/A4: 1997 European Norm	
		IEC 950 (second edition, third amend)	