Overview

At A Glance

Compaq AlphaServer/AlphaStation ES40 Systems include:

- Alpha 21264 6/500-MHz CPU with 4-MB L2 Late Write Cache, 67/667-MHz CPU with 8-MB L2 Dual Data Rate Cache, or 68/833-MHz CPU with 8-MB L2 Dual Data Rate Cache
- 6-10 64-bit PCI I/O expansion slots
- 512-MB, 1-GB, 2-GB, or 4-GB memory options (AlphaServers)
- 512-MB memory option (AlphaStations)
- 1.44-MB diskette drive
- 600-MB 40X IDE CD-ROM drive
- Two 9-pin serial ports
- One 25-pin parallel port
- RMC dedicated serial port, 6-pin MMJ connector
- Dual USB ports
- Keyboard and mouse port
- Knockouts for two 68-pin SCSI connections
- Auto-sensing power supply
- U.S. English keyboard with North America orders
- 3-button mouse
- Integral remote system management console
- Customer documentation
- *Tru64*™ UNIX or *OpenVMS*™ Factory Installed Software
- 90-day software warranty
- Protected by Compaq Services, including three-year hardware warranty, on-site with 5 x 9 next business day response

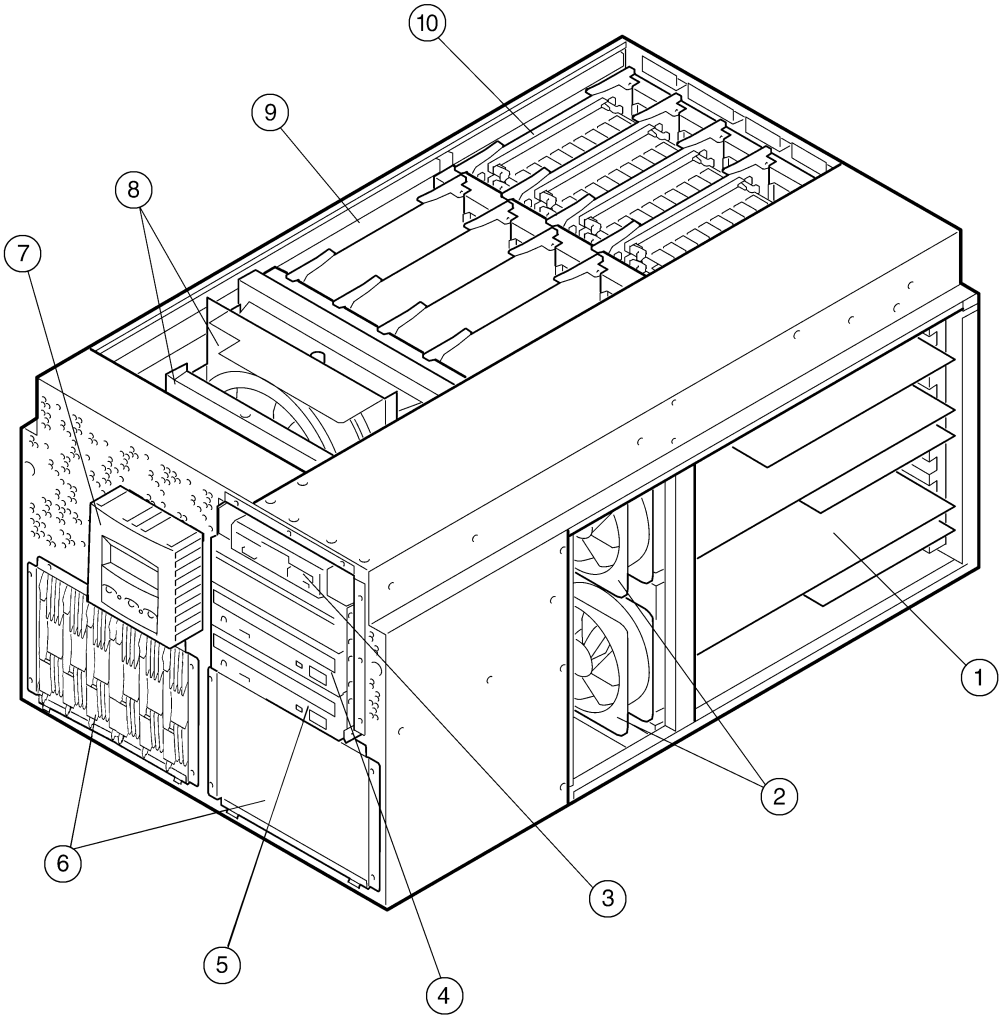

1. PCI cards
2. Fans
3. Diskette drive
4. Removable media bays
5. CD-ROM drive
6. 6-bay disk drive storage cages
7. Control panel
8. Fans
9. CPUs
10. Memory

COMPAQ

Standard Features

Processor	Alpha 21264 6/500-MHz CPU, 67/667-MHz CPU, or 68/833-MHz CPU	
Cache Memory	4-MB L2 Late Write Backup Cache (6/500-MHz CPU); 8-MB L2 Dual Data Rate Backup Cache (67/667-MHz CPU, 68/833-MHz CPU)	
Upgradability	Supports additional processors and upgrades of memory and hard drives	
Memory	Minimum	512 MB – AlphaServer ES40 Model 1 512 MB – AlphaStation ES40 1 GB – AlphaServer ES40 Model 2
	Maximum	16 GB (16 DIMM slots) Model 1; 32 GB (32 DIMM slots) Model 2 (see Step 3)
Network Controller	Choice of Ethernet controllers	
Expansion	PCI I/O slots	6 slots Model 1; 10 slots Model 2
Storage	Diskette Drive	1.44 MB diskette drive in dedicated slot
	CD-ROM	600-MB 40X IDE CD-ROM
	Hard Drives	Choice of 9.1-GB, 18.2-GB, or 36.4-GB drives
Interfaces	Parallel	1 25-pin parallel port
	Serial	2 9-pin serial ports
	USB	Dual USB ports
	Keyboard	1
	Mouse	1
	Remote systems management	1 dedicated remote systems management port
	SCSI connections	Two 68-pin SCSI connections knockouts
Graphics	Optional	
Form Factor	Tower, Pedestal, Rackmount (M-Series Cabinet)	
Power Supply	Auto sensing power supply, hot swappable, N+1 (see Step 4)	
Manageability	Compaq Insight Manager	
OS Support	AlphaServer ES40 Tru64 UNIX systems include pre-installed software, Base license, Unlimited User license, Server Extension license, Internet Express, iPlanet Directory Server, iPlanet Enterprise Server, and Compaq Secure Web Server AlphaStation ES40 Tru64 UNIX systems include pre-installed software, 2-user Base license and Compaq Open3D traditional license AlphaServer ES40 OpenVMS systems include pre-installed software, Base license with System Manager license and Enterprise Integration Server License Package for OpenVMS V3.1 AlphaStation ES40 OpenVMS systems include pre-installed software, Base license, Concurrent Use 1-user license, NAS 150 Client license, Compaq MMS RT license and Compaq Open3D traditional license Minimum OS support – Tru64 UNIX V4.0F or OpenVMS V7.1-2	
Service and Support	Protected by Compaq Services including a 3-year on-site hardware warranty with next business day response. Software warranty is a 90-day telephone advisory. Training, consulting, network integration, software support, comprehensive system maintenance and guaranteed uptime services are also available for customers requiring higher levels of service and support.	

Systems/Options

Step 1 – Select system

AlphaServer ES40 systems require the **mandatory** selection of the following items:

- Disk drive cage or StorageWorks™ shelf (Step 5)
  - Disk drive cage (BA610-6D) requires Ultra2 SCSI LVD storage adapter (3X-KZPCA-AA)
  - StorageWorks shelf requires UltraSCSI adapter and SCSI cable (Step 10)
- System disk drive (Step 5)
- Ethernet adapter (Step 7)
- Tower, Pedestal, or Rack Kit (Step 8)
- Non-North American systems require country-specific keyboard (Step 16); North American systems include U.S. English keyboard
- Software media and documentation for first system onsite

Notes: ES40 Model 1 to Model 2 Upgrade Kit available – see Step 18.
For system integration of options with 6-3 part numbers, contact CustomSystems.

AlphaServer ES40 Systems

ES40	OS	CPU	PCI I/O Slots	Memory/Cache	Order No.
Model 1	Tru64 UNIX	500 MHz	6	512 MB / 4 MB	DA-62AAA-CA
Model 1	Tru64 UNIX	500 MHz	6	1 GB / 4 MB	DA-62AAA-DA
Model 1	Tru64 UNIX	667 MHz	6	512 MB / 8 MB	DA-62BAA-CA
Model 1	Tru64 UNIX	667 MHz	6	1 GB / 8 MB	DA-62BAA-DA
Model 1	Tru64 UNIX	667 MHz	6	2 GB / 8 MB	DA-62BAA-EA
Model 1	Tru64 UNIX	833 MHz	6	512 MB / 8 MB	DA-62CAA-CA
Model 1	Tru64 UNIX	833 MHz	6	1 GB / 8 MB	DA-62CAA-DA
Model 1	Tru64 UNIX	833 MHz	6	2 GB / 8 MB	DA-62CAA-EA
Model 2	Tru64 UNIX	500 MHz	10	1 GB / 4 MB	DA-64AAA-DA
Model 2	Tru64 UNIX	500 MHz	10	2 GB / 4 MB	DA-64AAA-EA
Model 2	Tru64 UNIX	667 MHz	10	512 MB / 8 MB	DA-64BAA-CA
Model 2	Tru64 UNIX	667 MHz	10	1 GB / 8 MB	DA-64BAA-DA
Model 2	Tru64 UNIX	667 MHz	10	2 GB / 8 MB	DA-64BAA-EA
Model 2	Tru64 UNIX	667 MHz	10	4 GB / 8 MB	DA-64BAA-FA
Model 2	Tru64 UNIX	833 MHz	10	512 MB / 8 MB	DA-64CAA-CA
Model 2	Tru64 UNIX	833 MHz	10	1 GB / 8 MB	DA-64CAA-DA
Model 2	Tru64 UNIX	833 MHz	10	2 GB / 8 MB	DA-64CAA-EA
Model 2	Tru64 UNIX	833 MHz	10	4 GB / 8 MB	DA-64CAA-FA
Model 1	OpenVMS	500 MHz	6	512 MB / 4 MB	DY-62AAA-CA
Model 1	OpenVMS	500 MHz	6	1 GB / 4 MB	DY-62AAA-DA
Model 1	OpenVMS	667 MHz	6	512 MB / 8 MB	DY-62BAA-CA
Model 1	OpenVMS	667 MHz	6	1 GB / 8 MB	DY-62BAA-DA
Model 1	OpenVMS	667 MHz	6	2 GB / 8 MB	DY-62BAA-EA
Model 1	OpenVMS	833 MHz	6	512 MB / 8 MB	DY-62CAA-CA
Model 1	OpenVMS	833 MHz	6	1 GB / 8 MB	DY-62CAA-DA
Model 1	OpenVMS	833 MHz	6	2 GB / 8 MB	DY-62CAA-EA

Step 1 – Select system *(continued)*

AlphaServer ES40 Systems *(continued)*					
ES40	**OS**	**CPU**	**PCI I/O Slots**	**Memory/Cache**	**Order No.**
Model 2	OpenVMS	500 MHz	10	1 GB / 4 MB	DY-64AAA-DA
Model 2	OpenVMS	500 MHz	10	2 GB / 4 MB	DY-64AAA-EA
Model 2	OpenVMS	667 MHz	10	1 GB / 8 MB	DY-64BAA-DA
Model 2	OpenVMS	667 MHz	10	2 GB / 8 MB	DY-64BAA-EA
Model 2	OpenVMS	667 MHz	10	4 GB / 8 MB	DY-64BAA-FA
Model 2	OpenVMS	833 MHz	10	512 MB / 8 MB	DY-64CAA-CA
Model 2	OpenVMS	833 MHz	10	1 GB / 8 MB	DY-64CAA-DA
Model 2	OpenVMS	833 MHz	10	2 GB / 8 MB	DY-64CAA-EA
Model 2	OpenVMS	833 MHz	10	4 GB / 8 MB	DY-64CAA-FA
AlphaStation ES40 Systems					
Model 1	Tru64 UNIX	667 MHz	6	512 MB / 8 MB	DA-62BAA-BW
Model 2	Tru64 UNIX	667 MHz	10	512 MB / 8 MB	DA-64BAA-CW
Model 2	Tru64 UNIX	833 MHz	10	512 MB / 8 MB	DA-64CAA-CW
Model 1	OpenVMS	667 MHz	6	512 MB / 8 MB	DY-62BAA-BW
Model 2	OpenVMS	667 MHz	10	512 MB / 8 MB	DY-64BAA-CW
Model 2	OpenVMS	833 MHz	10	512 MB / 8 MB	DY-64CAA-CW

Step 2 – Additional CPU Modules – Optional

- One CPU included, three additional CPUs are supported

SMP upgrade, includes one 6/500-MHz CPU with 4-MB cache and Tru64 UNIX SMP license	KN610-AB
SMP upgrade, includes one 6/500-MHz CPU with 4-MB cache and OpenVMS SMP license	KN610-AC
SMP upgrade, includes one 67/667-MHz CPU with 8-MB cache and Tru64 UNIX SMP license	KN610-BB
SMP upgrade, includes one 67/667-MHz CPU with 8-MB cache and OpenVMS SMP license	KN610-BC
SMP upgrade, includes one 68/833-MHz CPU with 8-MB cache and Tru64 UNIX SMP license	KN610-CB
SMP upgrade, includes one 68/833-MHz CPU with 8-MB cache and OpenVMS SMP license	KN610-CC

Note: When upgrading to 68/833-MHz CPUs, all 67/667-MHz CPUs or all 6/500-MHz CPUs must be replaced; all CPU modules must be at the same speed. Additionally, when upgrading from 6/500-MHz to 67/667-MHz CPUs, the EV6 system (54-25385-01) must be at Rev E05 or higher. For Revisions lower than E05, contact Customer Services or 1-800-OK-COMPAQ (I-800-652-6672) and reference FCO #00-ES40 F002. Additionally, when upgrading to EV68, first upgrade the console firmware as outlined below:

From:	**To:**
EV67 667-MHz CPU	**EV68 833-MHz CPU**
	Upgrade console firmware to V5.9-24 as minimum revision
	Upgrade system hardware with EV68 CPUs
	Ensure all system firmware matches console version V5.9-24
EV6 500-MHz CPU	**EV68 833-MHz CPU**
	Upgrade console firmware to V5.9-24 as minimum revision
	Upgrade system hardware with EV68 CPUs
	Re-install V5.9-24 console firmware
	Ensure all system firmware matches console version V5.9-24

Options

Step 3 – Memory – Optional

- Systems include one memory option
- Model 1 systems supports four memory options (total of 16 DIMMs)
- Model 2 systems support eight memory options (total of 32 DIMMs – see Note below)
- Memory performance considerations: Interleaved operations reduce the average latency and increase the memory throughput over non-interleaved operations. With one memory option (4 DIMMs) installed, memory interleaving will not occur. With two identical memory options (8 DIMMs) installed, memory read-write operations are two-way interleaved. For two-way interleaving, arrays 0 and 2 or arrays 1 and 3 must not be empty. For four-way interleaving, the total size of each array must be the same. Examples follow:

Array 0	**Array 1**	**Array 2**	**Array 3**
512 MB	512 MB	512 MB	512 MB = 4-way interleaving
X	X	X	X
Array 0	**Array 1**	**Array 2**	**Array 3**
512 MB	512 MB	512 MB	1 GB = 4-way interleaving
512 MB	512 MB	512 MB	X
Array 0	**Array 1**	**Array 2**	**Array 3**
512 MB	512 MB	1 GB	1 GB = 4-way interleaving
512 MB	512 MB	X	X
Array 0	**Array 1**	**Array 2**	**Array 3**
512 MB	512 MB	512 MB	1 GB = 2-way interleaving
512 MB	1 GB	512 MB	512 MB
Array 0	**Array 1**	**Array 2**	**Array 3**
512 MB	X	512 MB	1 GB = 2-way interleaving
512 MB	X	512 MB	512 MB
Array 0	**Array 1**	**Array 2**	**Array 3**
512 MB	X	512 MB	X = 2-way interleaving
X	X	X	X
Array 0	**Array 1**	**Array 2**	**Array 3**
512 MB	512 MB	X	X = 1-way interleaving
X	X	X	X

256-MB memory option (4x64-MB DIMMs)	MS610-BA
512-MB memory option (4x128-MB DIMMs)	MS610-CA
1-GB memory option (4x256-MB DIMMs)	MS610-DA
2-GB memory option (4x512-MB DIMMs)	MS610-EA
4-GB memory option (4x1024-MB DIMMs)	MS610-FA

Note: ES40 configurations that require maximum N+1 power (three power supplies) are restricted to a maximum of 24 GB of mixed memory (sixteen 1-GB DIMMs and sixteen 512-MB DIMMs). If N+1 maximum power is not required, 32 GB of memory is supported. (This restriction expected to be removed by late Q4.)

Options

Step 4 – Additional Power Supplies – Required for third and fourth CPUs and/or second Disk Drive Cage

- One power supply supports two CPUs, up to 12 memory DIMMs, and one disk card cage; order second power supply if N+1 power is required.
- Two power supplies support third and fourth CPU, 13 to 32 memory DIMMs (up to 24 GB of memory), and/or two disk card cages; order third power supply if N+1 power is required for third and fourth CPUs, 24-GB of memory, and/or two disk card cages.
- Three power supplies support 32-GB of memory without N+1 power.
- Three power supplies support a maximum of 24 GB of memory with full N+1 power. (This restriction expected to be removed by late Q4.)
- Each additional power supply ordered with a tower system requires an additional country-specific power cord
- Pedestal system and Rack kit include three internal power cords regardless of the number of power supplies ordered; Pedestal systems support 120V and 240V power cords.

ES40 720W power supply	H7906-A9

Step 5 – Disk Drive Cage or StorageWorks Shelf – Mandatory

- Tower enclosure supports one system and two disk drive cages
- Pedestal enclosure supports one system and two disk drive cages, two Universal 42xx/43xx StorageWorks shelves or three BA36R StorageWorks shelves
- M-Series cabinets support five systems each with two disk drive cages and up to six StorageWorks shelves

Step 5a – Disk Drive Cage – Requires selection of system disk drive

6-bay disk drive cage with cable for use with 1.0" universal drives – requires mandatory selection of Ultra2 SCSI adapter (3X-KZPCA-AA) per disk drive cage	BA610-6D
6-bay disk drive cage with embedded Ultra2 LVD adapter; supports internal SCSI 1.0" universal drives or tapes only OpenVMS V7.1-2 requires Tima Kit: - DEC-AXPVMS-VMS712_UPDATE-V0300-4.PCSI Tru64 UNIX V4.0F requires Patch Kit 2 (BL13): - DUV40FAS0002-19991116.tar	BA610-6E
Note: See AlphaServer ES40 Configuration Chart for Storage Adapters in Step 10	

System Disk Drives *(Supported in Disk Drive Cage)*	9.1-GB Ultra3 SCSI 10,000 rpm 1.0″ Universal disk drive	3R-A0584-AA
	9.1-GB Ultra3 SCSI 15,000 rpm 1.0″ Universal disk drive	3R-A1542-AA
	18.2-GB Ultra3 SCSI 10,000 rpm 1.0″ Universal disk drive	3R-A0585-AA
	18.2-GB Ultra3 SCSI 15,000 rpm 1.0″ Universal disk drive	3R-A1543-AA
	36.4-GB Ultra3 SCSI 10,000 rpm 1.0″ Universal disk drive	3R-A0919-AA
	72.8-GB Ultra3 SCSI 10,000 rpm 1.0″ Universal disk drive	3R-A3050-AA

Step 5b – StorageWorks BA36R Shelf – Requires selection of UltraSCSI adapter and SCSI cable (Step 10) and system disk drive

- StorageWorks Shelf supports seven 3.5″ x 1.6″ hard disk drives; with addition of redundant power supply, only six drives are supported
- StorageWorks shelf kits are mounted back-to-back in pedestals and cabinets

StorageWorks UltraSCSI single-bus shelf kit	BA36R-RC
StorageWorks UltraSCSI split-bus shelf kit; Note: When ordering a split-bus shelf that will be mounted in a Pedestal Enclosure, order one BN37A-03 cable for KZPCM-DA adapter, BN37A-03 cable for 3X-DEPVZ-AA combo adapter, or one BN38C-03 for 3X-KZPCA-AA or KZPBA-CA adapter	BA36R-RD
3-m SCSI cable	BN37A-03

System Disk Drives *(Supported in StorageWorks BA36R Shelf)*	9.1-GB Ultra2 SCSI 7,200 rpm disk drive	DS-RZ1DA-VW
	9.1-GB Ultra3 SCSI 10,000 rpm disk drive	DS-RZ1DD-VW
	18.2-GB Ultra2 SCSI 7,200 rpm disk drive	DS-RZ1EA-VW
	18.2-GB Ultra3 SCSI 10,000 rpm disk drive	DS-RZ1ED-VW
	36.4-GB Ultra3 SCSI 10,000 rpm disk drive	DS-RZ1FC-VW

Step 5 – Disk Drive Cage or StorageWorks Shelf – Mandatory *(continued)*

Step 5c – StorageWorks Model 4314R and Model 4354R Universal Drive Shelves

	StorageWorks Model 4314R and 4354R Ultra2 SCSI (LVD) single-bus and split-bus Universal drive shelves; refer to Compaq StorageWorks Enclosure 4300 Family QuickSpecs when configuring shelves. When selecting a DS-SL13R-xx split-bus shelf, order two 3X-KZPCA-AA adapters with BN38C-xx cables. Model 43xx shelves are compatible with Wide Ultra2 (LVD) adapters only. Note that the depth of a DS-SL13R-xx shelf does not allow front and rear mounting.	
	StorageWorks Model 4314R Ultra3 SCSI (LVD) single-bus Universal drive rackmount shelf, includes one power supply, US	DS-SL13R-AA (190209-001)
	StorageWorks Model 4314R Ultra3 SCSI (LVD) single-bus Universal drive rackmount shelf, includes one power supply, International (requires power cord)	DS-SL13R-AB (190209-B31)
	StorageWorks Model 4314R Ultra3 SCSI (LVD) single-bus Universal drive rackmount shelf, includes one power supply, Japan	DS-SL13R-AJ (190209-291)
	StorageWorks Model 4354R Ultra3 SCSI (LVD) split-bus Universal drive rackmount shelf, includes two redundant power supplies, US	DS-SL13R-BA (190211-001)
	StorageWorks Model 4354R Ultra3 SCSI (LVD) split-bus Universal drive rackmount shelf, includes two redundant power supplies, International (requires power cord)	DS-SL13R-BB (190211-B31)
	StorageWorks Model 4354R Ultra3 SCSI (LVD) split-bus Universal drive rackmount shelf, includes two redundant power supplies, Japan	DS-SL13R-BJ (190211-291)
	To add additional power supply for single-bus Universal shelf, US	DS-SE2UP-AA
	To add additional power supply for single-bus Universal shelf, International	DS-SE2UP-AI
	Note: Model 4314 shelf with DS-KZPCC-AC adapter does not support a disk drive in last slot.	

International Power Cords for Universal Shelves (For Internal Connection from Power Strip to Shelf)	IEC-320, 19-inch power cord	BC25Y-1G
	IEC-320, 60-inch power cord	BC25Y-05
	IEC-320, 80-inch power cord	BC25Y-6H
	IEC-320, 100-inch power cord	BC25Y-8D
	IEC-320, 120-inch power cord	BC25Y-10
	IEC-320, .5-meter power cord	BN35S-0E
	IEC-320, 1.5-meter power cord	BN35S-1E
	IEC-320, 3-meter power cord	BN35S-03

StorageWorks Model 4314T Standalone Enclosure for Universal Drives	Model 4314T Ultra3 SCSI, single-bus tower enclosure, US	DS-SL13T-AA
	Model 4314T Ultra3 SCSI, single-bus tower enclosure, International	DS-SL13T-AB
	Model 4314T Ultra3 SCSI, single-bus tower enclosure, Japan	DS-SL13T-AJ

Options

Step 5 – Disk Drive Cage or StorageWorks Shelf – Mandatory *(continued)*

Step 5c – StorageWorks Model 4314R and Model 4354R Universal Drive Shelves *(continued)*

System Disk Drives *(Supported in Model 4314R and Model 4354R Universal Drive Shelves)*	9.1-GB Ultra3 SCSI 10,000 rpm 1.0″ Universal disk drive	3R-A0584-AA
	9.1-GB Ultra3 SCSI 15,000 rpm 1.0″ Universal disk drive	3R-A1542-AA
	18.2-GB Ultra3 SCSI 10,000 rpm 1.0″ Universal disk drive	3R-A0585-AA
	18.2-GB Ultra3 SCSI 15,000 rpm 1.0″ Universal disk drive	3R-A1543-AA
	36.4-GB Ultra3 SCSI 10,000 rpm 1.0″ Universal disk drive	3R-A0919-AA
	72.8-GB Ultra3 SCSI 10,000 rpm 1.0″ Universal disk drive	3R-A3050-AA

Step 6 – Internal Removable Media – Optional

- System supports four internal removable devices
- System includes 1.44-MB diskette drive
- System includes 5.25″ half-height 600-MB 40X IDE CD-ROM drive
- Removable media slots provide support for two 5.25″ half-height devices, or one 5.25″ full-height removable media device

5.25″ half-height 12/24-GB 4mm DAT SCSI tape drive, top gun blue; requires single-ended UltraSCSI adapter (KZPBA-CA, 3X-DEPVZ-AA or KZPCM-DA) and SCSI cable (3X-BN46M-01)	TLZ10-LB
5.25″ half-height 20/40-GB 4mm DAT Ultra2 (LVD) SCSI tape drive, top gun blue; requires Ultra2 (LVD) adapter (3X-KZPCA-AA) and SCSI cable (3X-BN46M-01)	3X-SD20X-LB
5.25″ half-height 35/70-GB 8mm AIT Wide UltraSCSI tape drive, top gun blue; requires single ended UltraSCSI adapter or Ultra2 adapter (KZPBA-CA, 3X-DEPVZ-AA, KZPCM-DA or 3X-KZPCA-AA) and SCSI cable (3X-BN46M-01)	3X-SZ35X-LB
5.25″ half-height 35/70-GB 8mm AIT LVD UltraSCSI tape drive, carbon black; requires 3X-KZPCA-AA LVD adapter	3R-A2392-AA
5.25″ half-height 50/100-GB 8mm AIT Ultra2 (LVD) SCSI tape drive, top gun blue; requires Ultra2 (LVD) adapter (3X-KZPCA-AA) and SCSI cable (3X-BN46M-01)	3X-SZ50X-LB
1-m Ultra2 68-pin LVD cable with two connectors, multimode terminator and two wide-to-narrow adapters (for connection of 50-pin narrow devices)	3X-BN46M-01

Options

Step 7 – Ethernet Adapters – Mandatory

- Adapters require a minimum of Tru64 UNIX V4.0F or OpenVMS V7.1-2
- Each adapter uses one PCI slot
- See Step 12 for additional networking options

Note: Ethernet adapter is not required if 3X-DEPVZ-AA or KZPCM is selected as SCSI adapter for StorageWorks shelf

	Maximum # Supported		
	Tru64 UNIX	**OpenVMS**	
PCI 1-port 32-bit 10/100-Mb single-channel UTP Fast Ethernet adapter (Twisted Pair)	4	4	3X-DE600-AA
PCI dual-port 10/100 UTP Fast Ethernet adapter (supported under Tru64 UNIX V4.0F and TruCluster V1.6)	2	4	3X-DE602-AA
PCI single-port multi-mode (MMF) add-on daughter card for 3X-DE602-AA (supported under Tru64 UNIX V4.0F and TruCluster V1.6)	2	2	3X-DE602-FA
PCI Combo adapter, includes 10/100 Mbps Ethernet adapter, Ultra2 LVD SCSI adapter, and 2D graphics adapter; no support for multi-head graphics OpenVMS V7.2-1 requires Tima Kit: - DEC-AXPVMS-VMS&@!_UPDATE-V0100--4.PCSI OpenVMS V7.1-2 requires: - DEC-AXPVMS-VMS712_UPDATE-V0300—4.PCSI - DEC-AXPVMS-VMS712_GRAPHICS-V0300—4.PCSI - DEC-AXPVMS-DNVOSIECO06-V0701—4.PCSI is recommended Tru64 UNIX V5.1 requires Patch Kit 3: - T64V51AS0003-20010413.tar Tru64 UNIX V4.0F with NHD2 – TruCluster V5.1 support restricted to non-shared buses	1	1 Requires Slot 0	3X-DEPVZ-AA
3-meter SCSI cable			BN37A-03
PCI 4-port 10/100 Mb Ethernet adapter	1	1	DE504-BA
Cable for 10BaseT Twisted Pair connection			BN25G-xx
PCI Gigabit Ethernet adapter, SC connectors, MMF – no boot support	4	4	DEGPA-SA
SC-SC dual Fibre Optic cable, mm, pp xx = length in meters			BN34B-xx
PCI 10/100/1000 UTP Ethernet adapter; Requires minimum version of Tru64 UNIX V5.0A, Patch kit 2: - T64V50AAS0002-20001004.tar Requires minimum version of OpenVMS V7.2-2; OpenVMS V7.3 requires Patch kit: - DEC-AXPVMS-VMS73_LAN-V0100—4.PCSI; no network boot support	4	4	DEGPA-TA

Options

Step 8 – System Enclosures – Mandatory selection of Tower, Pedestal, or Rack Kit

Step 8a – Tower Enclosure

- Tower enclosure supports one system
- Tower enclosure ordered in North America includes 120V power cord; country-specific power cord mandatory for all non-North American systems; additional power cord mandatory for each power supply ordered with a system installed in a tower enclosure

Tower Enclosure	BA61M-MT

Step 8b – Pedestal Enclosure

- Pedestal enclosure supports one system, two Universal 43xx StorageWorks shelves (Universal shelves require onsite installation) or three UltraSCSI BA36R StorageWorks shelves
- Pedestal enclosures (BA61P-PA, 120V / BA61P-PB, 240V) support Universal shelves
- 120V pedestal enclosure includes two external 120V power cords; 240V pedestal enclosure requires two country-specific power cords
- Pedestal enclosure includes two factory-configured power strips that provide five available outlets; if the number of BA356-RC/RD power supplies requires a sixth outlet, this can be accommodated only if the system chassis is limited to two H7906-A9 power supplies

120V Pedestal Enclosure, includes two external power cords	BA61P-PA
240V Pedestal Enclosure, requires two country-specific power cords	BA61P-PB

Step 8c – Rack Kit for M-Series Cabinet

- Rack Kit required for each AlphaServer ES40 system installed in a new or existing M-Series Cabinet
- Rack Kit supports one system

Rack kit for AlphaServer ES40, includes dress bezel, slides, three internal power cords, all bracketry and hardware for mounting in M-Series cabinets	BA61R-RM

- Note: Factory integration of an ES40 system drawer in a Compaq 9000 rackmount cabinet using rack kit, 3X-BA61R-RC, is not supported. Contact Custom Systems or Compaq Certified Integration Partner.

Step 9 – M-Series Cabinets

M-Series cabinet enclosures support up to four systems, up to six StorageWorks shelves, and/or two BA370 enclosures; M-series Enclosures require selection of the following items:

- H9A10 or H9A15 cabinet, 120V or 240V
- Rack kit for each system
- H9A10 or H9A15 rear cabinet extender
- Cabinet front door based on cabinet height
- Factory integration
- Ballast kit if only one system is ordered for the H9A15 cabinet

Note: For configurations beyond those listed in the following charts, contact CustomSystems.

Cabinet Configuration Chart for AlphaServer ES40 (8U) with StorageWorks Shelves (4U)

Cabinet	Rack Kit	Cabinet Extender	Cabinet Height/Space	Systems	BA356 Shelves	DS-SL13R 120V Shelves[2]	BA356/ DS-SL13R[3]	
							BA356	DS-SL13R
H9A10-MC/MD[1]	BA61R-RM	H9C10-TE	56″/32U	1	6	8	6	4
				2	6	5	6	1
				3	2	2	4	0
				4[1]	0	0	0	0
H9A15-MC/MD[4]	BA61R-RM	H9C15-TE	68.25″/39U	1	6	8	6	5
				2	6	5	6	2
				3	6	2	6	0
				4	2	0	2	0
				5[5]	0	0	0	0

Notes:

1. Contact Compaq CustomSystems for cabinet configurations with four AlphaServer ES40 systems installed in H9C10-MC/MD cabinet.
2. Japan only – 240V cabinet required when using universal shelves
3. When using a combination of BA356 and DS-SL13R shelves in the same cabinet, do not remove the top fan (only remove fan when using DS-SL13R shelves exclusively); Universal shelves require onsite installation
4. Installation of one AlphaServer ES40 system in an H9A15 cabinet requires the mandatory selection of a ballast kit.
5. When adding the 5th system drawer, replace H7600-AA or -DB power controller with H7602-EA or -DB power controller. When replacing H7600 controllers, replace all associated power cords; order BN35S-4E power cords for H7602-EA and H7602–DB power controllers.

Cabinet Configuration Chart for AlphaServer ES40 (8U) with StorageWorks BA370 Enclosure (20U) and Disk Shelves

- 20U of vertical cabinet space reserved for one front-mounted BA370 rackmount enclosure, or one front-mounted and one rear-mounted BA370 enclosure in top of cabinet, front to back.
  Note: The top fan (1U) is removed from the cabinet when a BA370 rackmount enclosure is installed.
- Systems and StorageWorks shelves are supported in remaining vertical space; StorageWorks shelves are not supported in rear of cabinet behind a front-mounted BA370 rackmount enclosure.

Cabinet	Rack Kit	Cabinet Extender	Cabinet Height/Space	ES40 Systems	BA370	Shelves
H9A10-MC/MD	BA61R-RM	H9C10-TE	56″ / 32U	1	1 front BA370 or 2 front & back BA370s	2
H9A15-MC/MD	BA61R-RM	H9C15-TE	68.25″ / 39U	1	1 front BA370 or 2 front & back BA370s	6
				2*	1 front BA370	2

* Contact Compaq *Custom*Systems when configuring more than one BA370 with two AlphaServer ES40 systems.

Step 9 – M-Series Cabinets *(continued)*

Cabinet Configuration Chart for AlphaServer ES40 (8U) with Modular Array 6000

					Modular Array 6000					
Cabinet	**Rack Kit**	**Cabinet Extender**	**Cabinet Height**	**ES40 Sys**	**Model S14 DS-SWXRA-NB**		**Model D14 DS-SWXRA-NA**		**Total PDUs**	
					Ctlr Shelves	**Disk Shelves**	**Ctlr Shelves**	**Disk Shelves**	**S14**	**D14**
H9A10-MC/MD	BA61R-RM	H9C10-TE	56″/32U	1	2	4	3	3	3	4
				2	1	2	2	2	2	3
				3	-	-	1	1	3	3
H9A15-MC/MD	BA61R-RM	H9C15-TE	68.25″/39U	1	3	6	4	4	4	4
				2	2	4	3	3	3	4
				3	1	2	2	2	3	3
				4	-	-	1	1	3	3

Configuration Notes:

- Select MA6000 Model D14 (DS-SWXRA-NA – 187738-B21); includes HSG60 controller, one dual-bus disk shelf, two power supplies, three fans, one battery, two I/O modules, one EMU **or**
- Select MA6000 Model S14 (DS-SWXRA-NB – 187739-B212); includes HSG60 controller, two single-bus disk shelves, two power supplies, three fans, one battery, two I/O modules, one EMU
- Each controller requires a Fibre Channel switch, switch cannot be mounted back to back
- Select DS-KGPSA-CA Fibre Channel adapter
- HSG60 minimum firmware: V8.5L
- Tru64 UNIX minimum version: V4.0F (V4.0F supports single path; V5.1 supports multi-path); minimum TruCluster V1.6, do not install or boot on Fibre Channel disk
- OpenVMS minimum version:V7.2-1; requires Tima Kits:
  - DEC-AXPVMS-VMS721_HARDWARE-V0100 – 4.PCSI
  - DEC-AXPVMS-VMS721_FIBRECHAN-V0300 – PCSI
  - For Fibre Channel configuration support, refer to: http://www.openvms.digital.com
- Order one ACS Software Kit per controller
- AlphaServer ES40 systems include two PDUs; order additional PDUs if more than two are required (H7600-AA, 120V, H7600-DB, 240V
- Factory integration required (YS-ASCAA-AA)

Step 9 – M-Series Cabinets *(continued)*

Cabinet Configuration Chart for AlphaServer (8U) with Modular Array 8000

					Modular Array MA8000			
Cabinet	**Rack Kit**	**Cabinet Extender**	**Cabinet Height**	**ES40 Systems**	**Controller Shelves**	**Disk Shelves**	**Total PDUs (2 included)**	**Extra Cab Space (U)[1]**
H9A10-MC/MD	BA61R-RM	H9C10-TE	56″ / 32U	1	1	6	4	2
				2	1	3[2]	2	3
				3	1[3]	1	3	1
H9A15-MC/MD	BA61R-RM	H9C15-TE	68.25″/ 39U	1	1	6	4	9
				1	2	6[2]	4	5
				2	1	6	4	1
				3	1	3[2]	3	2
				4	1	1[3]	3	0

1. Extra cab space can be used for Fibre Channel Switches – 8-port switch (1U), 16-port switch (2U), or 7-port and 12-port hubs (1U)
2. Use dual-bus disk shelves to maximize configuration
3. MA6000 configuration recommended

Configuration Notes:

- Order MA8000 60Hz (DS-HSG80-BK – 176622-B21) HSG80 controller, Model 2200 controller shelf (135820-B21), disk shelves; see StorageWorks MA8000 QuickSpecs for switch, power supply, and fan configuration rules.
- Each HSG80 controller requires a Fibre Channel switch (8-port DS-DSGGB-AA –158222-B21, 16-port DS-DSGGB-AB – 158223-B21); switch cannot be mounted back to back
- Select DS-KGPSA-CA Fibre Channel adapter
- HSG80 minimum firmware: V8.5F
- Tru64 UNIX minimum version: V4.0F; (V4.0F supports single path; V5.1 supports multi-path); minimum TruCluster V1.6; do not install or boot on Fibre Channel disk)
- OpenVMS minimum version: V7.2-1; requires Tima Kits:
  - DEC-AXPVMS-VMS721_HARDWARE-V0100 – 4.PCSI
  - DEC-AXPVMS-VMS721_FIBRECHAN-V0300 – PCSI
  - For Fibre Channel configuration support, refer to http://www.openvms.digital.com
- Order one ACS (Array Controller Software) kit per controller
- Order additional PDUs if more than two are required (H7600-AA, 120V, H7600-DB, 240V)
- Factory integration required (YS-ASCAA-AA)

M-Series Cabinets

- Required selection of one cabinet
- Two H7600-xx power distribution units are standard in the M-series cabinet
- For cabinet configurations that require a third power distribution unit (H7600-xx), contact Compaq *Custom*Systems at 1-800-AT-COMPAQ

67-inch cabinet with 56-inch or 32U of usable vertical space, 120V dual-24A controller, each with 10 NEMA 5-15R outlets, input power plug NEMA L5-30P, Americas, Asia Pacific; includes rear door and top fan tray	H9A10-MC
67-inch cabinet with 56-inch or 32U of usable vertical space, 240V dual-16A controller, each with 12 IEC C13 outlets, input power plug IEC 309, 16A, Europe; includes rear door and top fan tray	H9A10-MD
79-inch cabinet with 68.25-inch or 39U of usable vertical space, 120V dual-24A controller, each with 10 NEMA 5-15R outlets, input power plug NEMA L5-30P, Americas, Asia Pacific; includes rear door and top fan tray	H9A15-MC
79-inch cabinet with 68.25-inch or 39U of usable vertical space, 240V dual-16A controller, each with 12 IEC C13 outlets, input power plug IEC 309, 16A, Europe; includes rear door and top fan tray	H9A15-MD

Options

Step 9 – M-Series Cabinets *(continued)*

Rear Cabinet Extender	• Required selection of one cabinet extender for each H9A10 or H9A15 cabinet	
	Rear cabinet extender, top gun blue, for H9A10-MC/MD cabinets	H9C10-TE
	Rear cabinet extender, top gun blue, for H9A15-MC/MD cabinets	H9C15-TE
Cabinet Front Door	• Required selection of door based on cabinet height	
	Front door, top gun blue, for H9A10-MC/MD cabinet enclosure	H9C10-TF
	Front door, top gun blue, for H9A15-MC/MD cabinet enclosure	H9C15-TF
Factory Integration	• Required	
	Factory Integration of systems and storage devices assembled and configured in cabinet enclosure in predefined locations	YS-ASCAA-AA
Ballast Kit	• Required only if one system is ordered for the H9A15 cabinet	
	• Ballast is added to a cabinet at particular locations for specific configurations to meet safety regulations for installation, operation, and service; see Cabinet Configuration Charts.	
	Two 35-40 lb. steel plates	H9C10-MC
Shelves Supported in M-series Cabinets	• Optional	
	UltraSCSI single-ended RETMA rack, single-bus personality module, 180W power supply	BA36R-RC
	UltraSCSI single-ended RETMA rack, split-bus personality module, 180W power supply	BA36R-RD
Power Supply	180W power supply, includes 120V North American and 240V IEC power cord	CK-BA35X-HH

Step 10 – Storage Adapters/Controllers – Required if StorageWorks shelf is selected in Step 5

Note: Refer to the following chart when configuring adapters, shelves, and disks.

AlphaServer ES40 Configuration Chart for Storage Adapters

Adapter	Shelf	Disk Drive	Tru64 UNIX	OpenVMS
3X-KZPCA-AA	BA610-6D DS-SSL14-Rx DS-SL13R-xx	3R-A0xxx-AA 1.0” Universal 3R-A1xxx-AA 1.0” Universal	V4.0F to V5.1	V7.2-1
3X-DEPVZ-AA	DS-SL13R-xx	3R-A1xxx-AA 1.0” Universal	Not supported	V7.2-1
KZPCM-DA	BA36R-xx	DS-RZ1xx-VW, DS-EZxxx-VW	V4.0F to V5.1	V7.2-1
KZPBA-CA	BA36R-xx	DS-RZ1xx-VW, DS-EZxxx-VW	V4.0F to V5.1	V7.2-1
Note: Ethernet adapter is not required if 3X-DEPVZ-AA or KZPCM-DA is selected as SCSI adapter for StorageWorks shelf.				

Step 10 – Storage Adapters/Controllers – Required if StorageWorks shelf is selected in Step 5 *(continued)*

RAID Controllers

Adapter	Shelf	Disk Drive	Tru64 UNIX		OpenVMS
KZPAC-AA/CA/CB	BA36R-xx	DS-RZ1xx-VW	V4.0F to V5.1		V7.2-1
			External RAID		
			V4.0F	V5.1	
DS-KZPCC-AC(1)	DS-SSL14-Rx DS-SL13R-xx	3R-A0xxx-AA 1.0″ Universal 3R-A1xxx-AA 1.0″ Universal	EV6 EV67 EV68	Not supported EV67* EV68	Not supported
DS-KZPCC-CE(1)	DS-SSL14-Rx DS-SL13R-xx	3R-A0xxx-AA 1.0″ Universal 3R-A1xxx-AA 1.0″ Universal	EV6 EV67 EV68	Not supported EV67* EV68	Not supported

(1) DS-KZPCC-AC/CE RAID controllers can be used with universal shelves and drives in ES40 Pedestal and Rackmount configurations. Configuration rules are restricted to specific CPU speeds and OS versions:

- Tru64 UNIX V4.0F requires NHD3 and Patch Kit 4 (BL15) or later (for EV6, EV67, EV68 systems)
- Tru64 UNIX V5.1 requires Patch Kit 3 (BL17) and Early Release Patch C462.02 (for EV68 and specific EV67 systems)
  - *EV67 systems (54-30362-01) on V5.1 must be at Revision C01 or Revision D01
  - Patch Kit 3 (BL17) is located at: T64V5117-C0046202-11060-Manual-ER-20010615.tar
  - Patch C462.02 is located at: http://ftp1.support.compaq.com/public/unix/v5.1/
- DS-KZPCC-AC/CE RAID controllers support standalone and cluster configurations
  - No support as boot device in cluster configurations
  - TruCluster V5.1 (restricted to non-shared buses only)

Note: Support for DS-KZPCC-AC/CE RAID controllers with BA610-6D disk drive cages is planned for Q301.

RAID Controllers

	Maximum # Supported		
	Tru64 UNIX	**OpenVMS**	
PCI 3-port PCI to Ultra2, 64-bit, LVD backplane RAID controller with 64-MB cache (uses one PCI slot); requires connection to DS-SSL14-Rx (maximum seven disks supported per channel) or to DS-SL13R-xx (maximum 14 disks with single channel)	8	-	DS-KZPCC-CE
PCI 1-port PCI to Ultra2, 64-bit, LVD backplane RAID controller with 16-MB cache (uses one PCI slot); requires connection to DS-SSL14-Rx (maximum seven disks supported per channel) or to DS-SL13R-xx (maximum 14 disks with single channel)	8	-	DS-KZPCC-AC
PCI-to- Fibre Channel adapter, 64-bit, single-channel (uses one PCI slot) Note: Supports a maximum of four adapters for switched standalone or switched clustered configurations; supports a maximum of one adapter for all arbitrated loop configurations.	See Note	See Note	DS-KGPSA-CA (168794-B21)
Fibre Channel cable (BNGBX-xx) xx = 02, 05, 15, 30, 50 meters, x = 1 (02 m), 2 (05 m), 3 (15 m), 4 (30 m), 5 (50 m)			234457-B2x
PCI 1-port Ultra2 (LVD) SCSI adapter, 32-bit, single-channel (uses one PCI slot); includes internal 68-pin and external 68-pin HD connectors; requires BN38C-xx cable to connect adapter to Ultra2 shelf; HSZxx RAID controllers not supported. OpenVMS V7.1-2 requires Tima Kit: - DEC-AXPVMS-VMS712_UPDATE-V0300—4.PCSI; Tru64 UNIX V4.0F requires Patch Kit2 BL13: - DUV40FAS0002-19991116.tar	6	6	3X-KZPCA-AA
68-pin HD male-to-VHDCI male UltraSCSI cable; xx = 02, 03, 05, 10, 20, 25 m			BN38C-xx
PCI combo adapter - See Step 7	-	1	3X-DEPVZ-AA

Options

Step 10 – Storage Adapters/Controllers – Required if StorageWorks shelf is selected in Step 5 *(continued)*

RAID Controllers *(continued)*

	Maximum # Supported		
	Tru64 UNIX	**OpenVMS**	
PCI 2-port UltraSCSI single-ended adapter and 10/100 Mb Ethernet combo adapter (uses one PCI slot); includes internal 68-pin and 50-pin HD connectors and two external 68-pin VHDCI SCSI connectors, requires BN37A-xx cable to connect to single-ended UltraSCSI shelf	4	4	KZPCM-DA
VHDCI male-to-VHDCI male UltraSCSI cable, xx = 02, 2E [2.5], 03, 05, 10, 20 m			BN37A-xx
PCI 1-port UltraSCSI differential adapter (uses one PCI slot); includes external 68-pin HD connector, requires BN38C-xx cable (2 to 25 m) to connect adapter to differential UltraSCSI shelf or RAID controller	5	5	KZPBA-CB
68-pin HD male-to-VHDCI male UltraSCSI cable; xx = 02, 03, 05, 10, 20, 25 m			BN38C-xx
PCI 1-port UltraSCSI RAID controller with 4-MB cache memory (uses one PCI slot), includes RAID Array 230/Plus Subsystem software and documentation kit; includes VHDCI female connector; tape drives not supported; 18.2-GB disk drives not supported, requires BN37A-xx cable (.3 to 20 m) to connect to single-ended UltraSCSI shelf	4	4	KZPAC-AA
PCI 3-port UltraSCSI RAID controller with 4-MB cache memory (uses one PCI slot), includes RAID Array 230/Plus Subsystem Software and documentation kit; tape drives not supported; 18.2-GB disk drives not supported; SCSI cable required for each active port; requires BN37X-xx cable (.3 to 20 m) to connect to single-ended UltraSCSI shelf, and BN31K-0E for external third port connection	4	4	KZPAC-CA
Same as KZPAC-CA with 8-MB cache memory	4	4	KZPAC-CB
Cache battery backup for KZPAC controller			KZPSC-UB
VHDCI male-to-VHDCI male UltraSCSI cable; xx = 02, 2E [2.5], 03, 05, 10, 20, 25 m Note: Manufacturing may substitute BN37A-02 cable for specific cabinet configurations.			BN37A-xx
SCSI cable/bulkhead assembly kit, supports one third-port connection from KZPAC-CA/CB, allows external connection of one third port			BN31K-0E
SCSI cable/bulkhead assembly kit, supports two third-port connections from KZPAC-CA/CB, allows external connection of two third ports			KZPAC-SB
PCI CI adapter for OpenVMS systems only; requires two PCI slots and CI cable for each adapter	-	2	CIPCA-BA
CI cable			BNCIA-xx
PCI DSSI controller for OpenVMS systems only; requires HSDxx controller to connect directly to StorageWorks shelf; requires BC29S-xx cable	-	4	KFPSA-AA
6-foot DSSI cable for connection to HSD10 installed in BA36R pedestal shelf			BC29S-06
9-foot DSSI cable for connection to HSD10 installed in BA36R cabinet shelf			BC29S-09

Options

Step 11 – Storage Devices – Optional

UltraSCSI Configuration Rules	• UltraSCSI configurations require UltraSCSI components (controllers, adapters, shelves, disks, and cables)	
	• UltraSCSI adapters and RAID controllers support UltraSCSI disks at UltraSCSI speeds in UltraSCSI top gun blue shelves (DS-BA356-xx)	
	• UltraSCSI and Fast10 drives can be mixed in DS-BA356 top gun blue UltraSCSI shelf; UltraSCSI adapter negotiates maximum transfer speed of drives	
UltraSCSI StorageWorks Pedestals	• UltraSCSI top gun blue pedestals provide support for UltraSCSI disk drives; pedestals are available in single-bus or split-bus configurations and include a personality module and 180W power supply	
	• UltraSCSI shelf supports: seven 3.5″ hard disk drives, or one 5.25″ device and four 3.5″ hard disk drives, or two 5.25″ devices and one 3.5″ hard disk drive	
	• Installation of redundant power supply reduces number of 3.5″ drive slots by one	
	UltraSCSI single-ended pedestal, single-bus personality module, 180W power supply	DS-BA356-KF
	UltraSCSI single-ended pedestal, split-bus personality module, 180W power supply	DS-BA356-KG
	UltraSCSI pedestal, single-channel differential personality module, 180W power supply	DS-BA356-KH
	180W power supply, includes 120V North American and 240V IEC power cord	DS-BA35X-HH
Tape Drives	• Tape drives require single-ended UltraSCSI adapter and country-specific power cord	
	• For more information on Compaq tape drives, see http://www.compaq.com/products/storageworks/sitemap.html#tapedrives	
AIT Tape Drives	35/70-GB 8mm AIT LVD tabletop tape drive, North America; requires 3X-KZPCA-AA LVD adapter	216885-001
	35/70-GB 8mm AIT LVD tabletop tape drive, International; requires 3X-KZPCA-AA LVD adapter	216885-B31
	35/70-GB 8mm AIT LVD tabletop tape drive, Japan; requires 3X-KZPCA-AA LVD adapter	216885-291
	35/70-GB 8mm AIT SCSI tabletop tape drive with 120V North American power cord; requires 3X-KZPCA-AA or KZPBA-CA SCSI adapter	388507-001
	35/70-GB 8mm AIT SCSI tabletop tape drive, International; requires 3X-KZPCA-AA or KZPBA-CA SCSI adapter	388507-B31
	50/100-GB 8mm AIT SCSI tabletop tape drive with 120V North American power cord; requires 3X-KZPCA-AA Wide Ultra2 (LVD) adapter	157767-001
	50/100-GB 8mm AIT SCSI tabletop tape drive, International; requires 3X-KZPCA-AA Wide Ultra2 (LVD) adapter	157767-B31
	35/70-GB AIT hot plug LVD Universal tape drive, uses two slots in BA610-6D or 43xxx shelves	3R-A2396-AA
	50/100-GB AIT hot plug LVD Universal tape drive, uses two slots in BA610-6D or 43xxx shelves	3R-A2779-AA
AIT Tape Libraries	SSL2020 AIT library with one AIT 50-GB drive and 20 slots, rackmount, requires 3X-KZPCA-AA	175196-B21
	SSL2020 AIT library with two AIT 50-GB drives and 20 slots, rackmount, requires 3X-KZPCA-AA	175196-B22
	Tabletop SSL2020 AIT library with one AIT 50-GB drive and 20 slots requires 3X-KZPCA-AA LVD adapter	175196-B21
	Tabletop SSL2020 AIT library with two AIT 50-GB drives and 20 slots, requires 3X-KZPCA-AA LVD adapter	175196-B22

Options

Step 11 – Storage Devices – Optional *(continued)*

DAT Drives	12/24-GB 4mm DAT narrow single-ended tabletop SCSI tape drive with 120V North American power cord; requires BN31W-xx SCSI cable and KZPBA-CA, 3X-DEPVZ-AA or KZPCM-DA adapter	DS-TLZ10-DB
	20/40-GB 4mm DAT Wide Ultra2 (LVD) tabletop SCSI tape drive with 120V North American power cord; requires 3X-KZPCA-AA Wide Ultra2 (LVD) adapter	157770-001
	20/40-GB 4mm DAT Wide Ultra2 (LVD) tabletop SCSI tape drive, International; requires 3X-KZPCA-AA Wide Ultra2 (LVD) adapter	157770-B31
	20/40-GB DAT auto loader external, North America	166505-001
	20/40-GB DAT auto loader external, International; requires BN31W-xx SCSI cable and KZPBA-CA, 3X-DEPVZ-AA or KZPCM-DA adapter	166505-B31
	20/40-GB DAT auto loader external, Japan	166505-291
	20/40-GB DAT DDS4 hot plug LVD Universal tape drive, uses two slots in BA610-6D or 43xxx shelves	3R-A2780-AA
DLT Drives	35/70-GB DLT single-ended tabletop tape drive, requires BN21K-xx SCSI cable and KZPBA-CA, 3X-DEPVZ-AA or KZPCM-DA adapter	DS-TZ89N-TA
	Tabletop DLT8000 40/80-GB DLT external tape drive; requires 3X-KZPCA-AA LVD adapter	146197-B21
	Tabletop DLT8000 40/80-GB DLT external tape drive, Japan; requires 3X-KZPCA-AA LVD adapter	146197-291
	Tabletop TL881 DLT mini-library with one DLT4000 tape drive; requires HVD KZPBA-CB adapter and SCSI cable	128667-B21
	Tabletop TL881 DLT mini-library with two DLT4000 tape drives; requires HVD KZPBA-CB adapter and SCSI cable	128667-B22
	Tabletop TL891 DLT mini-library with one TZ89N tape drive; requires HVD KZPBA-CB adapter and SCSI cable	120875-B21
	Tabletop TL891 DLT mini-library with two TZ89N tape drives; requires HVD KZPBA-CB adapter and SCSI cable	120875-B22
Removable Media Devices for StorageWorks Shelves	• For maximum performance, tape libraries must be configured with Fast Wide Differential (FWD) controllers for tape backup	
	• For more information on Compaq tape drives, see http://www.compaq.com/products/storageworks/sitemap.html#tapedrives	
AIT Drives	35/70-GB 8mm AIT SCSI tape drive in 3.5″ StorageWorks carrier (BA36R or BA356 shelves)	DS-AIT35-VW
	SSL2020 AIT library with one AIT 50-GB drive and 20 slots, rackmount, LVD (Universal shelves)	175196-B21
	SSL2020 AIT library with two AIT 50-GB drives and 20 slots, rackmount, LVD (Universal shelves)	175196-B22
DAT Drives	12/24-GB 4mm DAT narrow SCSI tape drive in StorageWorks carrier (BA36R or BA356 shelves)	DS-TLZ10-VA
DLT Drives	40/80-GB DLT8000 tape drive in StorageWorks carrier (BA36R or BA356 shelves)	DS-TZ90N-VW
	20/40-GB DLT single-ended tape drive in StorageWorks carrier (BA36R or BA356 shelves)	TZ88N-VA
	35/70-GB DLT single-ended tape drive in StorageWorks carrier (BA36R or BA356 shelves)	DS-TZ89N-VW
	DLT mini-library expansion unit with bar code reader, 16 cartridges, wide differential SCSI robotic controller with 68-pin HD female SCSI connector, universal mounting rails (Metric/RETMA)	DS-TL890-NE

Options

Step 11 – Storage Devices – Optional *(continued)*

DLT Tape Libraries	MSL5026DLX or MSL5026SL, DLT/SDLT tabletop library, 0 drives; all MSL5026 libraries are supported with 3X-DEPVZ-AA and 3X-KZPCA-AA adapters	231838-B21
	MSL5026DLX, DLT tabletop library with one 40/80-GB DLT tape drive, LVD	231821-B21
	MSL5026DLX, DLT tabletop library with two 40/80-GB DLT tape drives, LVD	231821-B22
	MSL5026DLX or MSL5026SL, DLT/SDLT rackmount library, 0 drives	231979-B21
	MSL5026DLX, DLT rackmount library with one 40/80-GB DLT tape drive, LVD	231891-B21
	MSL5026DLX, DLT rackmount library with two 40/80-GB DLT tape drives, LVD	231891-B22
	MSL5026SL, SDLT tabletop library with one 110/220-GB SDLT tape drive, LVD	231822-B21
	MSL5026SL, SDLT tabletop library with two 110/220-GB SDLT tape drives, LVD	231822-B22
	MSL5026SL, SDLT rackmount library with one 110/220-GB SDLT tape drive, LVD	231892-B21
	MSL5026SL, SDLT rackmount library with two 110/220-GB SDLT tape drives, LVD	231892-B22
	ESL9326DX DLT Enterprise tape libraries with six 40/80-GB tape drives (161265-B24/-B25/-B26/-B27/-B28 for 8, 10, 12, 14, or 16 tape drives); requires KZPBA-CB	161265-B23
	ESL9198 DLX Enterprise tape libraries with two 40/80-GB tape drives, 198 slots (194993-B24/-B28 for 4 or 8 tape drives); requires 3X-KZPCA-AA	194993-B22
	TL891DLX DLT tabletop library with one DLT tape drive, LVD	157300-B21
	TL891DLX DLT tabletop library with two DLT tape drives, LVD	157300-B22
	TL891DLX DLT rackmount library with one DLT tape drive, LVD	157305-B21
	TL891DLX DLT rackmount library with two DLT tape drives, LVD	157305-B22
	Rackmount TL881 DLT mini-library with one DLT4000 tape drive; requires KZPBA-CB adapter	128668-B21
	Rackmount TL881 DLT mini-library with two DLT4000 tape drives; requires KZPBA-CB adapter	128668-B22
DLT Tape Drive Enclosures (for rackmount configurations)	DLT Tape Array III Model 0 enclosure, US	168047-001
	DLT Tape Array III Model 0 enclosure, International	168047-B31
	DLT Tape Array III Model 0 enclosure, Japan	168047-291
	DLT 4000 tape drive, maximum four per DLT tape drive enclosure	340743-B22
	DLT 7000 tape drive, maximum four per DLT tape drive enclosure	242520-B21
	DLT 8000 tape drive, maximum four per DLT tape drive enclosure	146196-B21
	110/220 GB SDLT tape drive supported in DLT tape drive enclosure	192106-B21
BA370 Rackmount Enclosure	• Mandatory rear cabinet extender ordered for systems installed in M-series cabinets (H9A10 and H9A15) allows two BA370 enclosures to be installed front to back in cabinet	
	• Host adapter, RAID Array controller, ACS firmware, cache battery, cables, platform-specific Solutions Software Kit, and disk drives must be ordered separately	
	BA370 front mount rackmount enclosure with five 180W power supplies, includes RETMA rackmount kit; first BA370 enclosure must be front mounted in cabinet, 20U height	2T-BA370-AS
	BA370 rear mount rackmount enclosure with five 180W power supplies, includes RETMA rackmount kit; second BA370 enclosure must be rear mounted in cabinet, 20U height	2T-BA370-AR

Options

Step 11 – Storage Devices – Optional *(continued)*

External Storage Solutions/Controllers	Modular Array 6000 D14 Fibre Channel RAID storage solution, includes one HSG60 controller with 256-MB cache, one M2100 controller shelf, one dual-bus disk shelf, two I/O ports, two power supplies	187738-B21 (DS-SWXRA-NA)
	Modular Array 6000 S14 Fibre Channel RAID storage solution, includes one HSG60 controller with 256-MB cache, one M2100 controller shelf, two single-bus disk shelves, two I/O ports, and two power supplies	187739-B21 (DS-SWXRA-NB)
	Modular Array 8000 Fibre Channel RAID storage solution, 60 Hz; includes one HSG80 controller with 256-MB cache, one M2200 controller shelf, three dual-bus disk shelves, two I/O ports, two power supplies	175992-B21 (DS-SWXEB-CA)
	Modular Array 8000 Fibre Channel RAID storage solution, 50 Hz; includes one HSG80 controller with 256-MB cache, one M2200 controller shelf, three dual-bus disk shelves, two I/O ports, two power supplies	175992-B22 (DS-SWXEB-CB)
	Enterprise Modular Array 12000 Fibre Channel RAID storage solution, 60 Hz	175993-B21
	Enterprise Modular Array 12000 Fibre Channel RAID storage solution, 50 Hz	175993-B22
	Note: For Modular Array 6000, Modular Array 8000, and Enterprise Modular Array 12000 configuration and ordering information, see http://www.compaq.com/products/storageworks/raidstoragesystems.html	
	Fibre Channel controller (HSG80), includes 64-MB cache; each HSG80 requires 128697-B21 HSG80 ACS V8.4F software kit for RAID Array and Enterprise Storage Array solutions	380671-B21
	Fibre Channel controller (HSG80), includes 256-MB cache; each HSG80 requires 128697-B21 HSG80 ACS V8.4F software kit for RAID Array and Enterprise Storage Array solutions	380672-B21
	UltraSCSI controller (HSZ80), includes 64-MB cache; requires 400569-001 for Tru64 UNIX or 400571-001 for OpenVMS for RAID Array and Enterprise Storage Array solutions	400564-B21
	UltraSCSI controller (HSZ80), includes 256-MB cache; requires 400569-001 for Tru64 UNIX or 400571-001 for OpenVMS for RAID Array and Enterprise Storage Array solutions	400565-B21
RA3000 RAID Array	• RAID Array 3000 (HSZ22) storage array is supported on AlphaServer ES40 systems (Tru64 UNIX V4.0F, V5.0A or higher and OpenVMS V7.x); supports KZPBA-CB adapter, minimum console V5.8	
	• For ordering information see: http://www.compaq.com/products/storageworks/raidstorage/RA3000ped_config.html	
RA8000, ESA12000 Ultra and RA8000, ESA12000 Fibre Channel	• RAID Array 8000 and ESA 12000 (HSZ80) storage arrays are supported on AlphaServer ES40 systems	
	• RAID Array 8000 and ESA 12000 Fibre Channel (HSG80) storage arrays are supported on AlphaServer ES40 systems	
	• For ordering information see: http://www.compaq.com/products/storageworks/raidstoragesystems.html	

Step 12 – Networking Adapters/Controllers – Optional

- Adapters require a minimum of Tru64 UNIX V4.0F or OpenVMS V7.1-2
- Each adapter/controller uses one PCI slot
- See Step 7 for supported Ethernet adapters

Note: Ethernet adapter is not required if 3X-DEPVZ-AA or KZPCM is selected as SCSI adapter for StorageWorks shelf

	Maximum # Supported		
	Tru64 UNIX	**OpenVMS**	
PCI FDDI adapter, single attachment station (SAS), multi-mode fiber (MMF), SC connector	4	4	3X-DEFPA-AC
PCI FDDI adapter, DAS, MMF, SC connector	4	4	3X-DEFPA-DC
MIC-SC dual fiber optic cable			BN34D-xx
SC-to-SC dual fiber optic cable			BN34B-xx
PCI FDDI adapter, DAS, TP-PMD	4	4	3X-DEFPA-MC
PCI FDDI adapter, SAS, TP-PMD, requires BN25H-03	4	4	3X-DEFPA-UC
3-m (9.8′) FDDI cross-over cable			BN25H-03
PCI 2-port intelligent synchronous controller OpenVMS systems require V7.1-2 and minimum of X.25 V1.5 with Kits: - DEC-AXPVMS-WANDD-V0105-1-1.PCSI - DEC-AXPVMS-X25-V0105-1-1.PCSI BC33x-xx cable required	-	4	3X-PBXDD-AA
PCI 4-port intelligent synchronous controller OpenVMS systems require V7.1-2 and minimum of X.25 V1.5 with Kits: - DEC-AXPVMS-WANDD-V0105-1-1.PCSI - DEC-AXPVMS-X25-V0105-1-1.PCSI BC33x-xx cable required	-	4	3X-PBXDD-AB
PCI 4-port asynchronous controller; maximum two PBXDA-Ax per system	2	2	PBXDA-AA
PCI 8-port asynchronous controller, cable included; maximum two PBXDA-Ax per system	2	2	PBXDA-AB
PCI 16-port asynchronous controller, cable included; maximum two PBXDA-Ax per system	2	2	PBXDA-AC
Asynchronous multi-port MUX expander XEM			CXI01-AB
Asynchronous MUX cable converter (RJ45-DB25)			CXI01-AC
Asynchronous MUX adapter (RJ45-MJ11), 8 pack			CXI01-AF
PCI-to-ATM 155 Mb adapter - Fiber	6	6	3X-DAPBA-FA
PCI-to-ATM 155 Mb adapter - UTP	6	6	3X-DAPBA-UA
PCI-to-ATM 622 Mb adapter - Fiber	4	4	3X-DAPCA-FA

Step 13 – MEMORY CHANNEL – Optional

Tru64 UNIX Systems (V5.0A and later)	• Each system node in the cluster requires a TruCluster software license (QL-6BRAE-AA)
Tru64 UNIX Systems (V4.0F)	• Requires a minimum of Tru64 UNIX V4.0F with TruCluster V1.6 or later
	• Each system node in the cluster requires a TruCluster Production Server (QB-3RLAE-AA) or TruCluster MEMORY CHANNEL software license (QB-4ZCAE-AA)
	• TruCluster MEMORY CHANNEL license (QB-4ZCAG-AA), normally used for high performance technical computing applications, not required if systems include a TruCluster Production Server license (QB-3RLAE-AA)
OpenVMS Systems	• OpenVMS V7.1-2 or later and OpenVMS Cluster license (QL-MUZAE-AA) are required
Configuring Information	• Up to two PCI-to-System Area Network adapters (CCMAB-AA) are supported in a single system.
	• For two-node clusters order a CCMAB-AA for each system and one BN39B-04 or BN39B-10 cable; cable connects directly to CCMAB-AA in each system.
	• For three or four system nodes, order one CCMAB-AA adapter, one BN39B-04 or BN39B-10 cable and one CCMHB-AA; make connections from the CCMAB-AA in a system to the CCMHB-AA.
	• CCMHB-AA includes four CCMLB-AA line cards and supports up to four nodes; expansion up to eight system nodes can be achieved by adding up to four CCMLB-AA line cards.
	• If two CCMAB-AAs are configured in each system, a second CCMHB-AA is required for three or more nodes; in two-node clusters, the CCMAB-AAs may be directly connected.
	• If nodes must be separated by a distance longer than standard copper cables allow, the CCMFB option converts the output of the standard CCMAB controller or CCMLB line card to single-mode fiber optic cable. The fiber optic connection may be up to 2,000 meters long between two CCMAB controllers connected in virtual hub mode, or 3,000 meters between a CCMAB controller and a CCMHB hub. (The connection from the CCMHB hub to a second system may also be 3,000 meters.) The CCMFB option requires a second PCI slot in the system from which it draws power only. It is normally connected to the corresponding CCMAB controller with the short BN39B-01 cable. The CCMFB is also used in the CCMHB hub where it occupies a slot normally used by the CCMLB line card, limiting expansion to four radial fiber optic connections.
	• CCMHB-BA hub expansion box provides additional slots for up to eight fiber optic connections. Two standard length single-mode fiber optic cables are available from Compaq (BN34R-10 and BN34R-31); however, users normally provide this fiber optic connection. Fiber optic connectivity is completely transparent to the systems using it and has no performance impact.

MEMORY CHANNEL Controller/System Area Network Hub	PCI-to-System Area Network Controller, maximum two	CCMAB-AA
	System Area Network Hub with four line cards; includes BN19P-2E power cord for Canada, Japan, and US –for other regions, order appropriate power cord from the following list:	CCMHB-AA
	Hub expansion box with no line cards	CCMHB-BA
	Expansion line card for CCMHB hub	CCMLB-AA
	1-m cable for CCMAB and CCMHB	BN39B-01
	4-m cable for CCMAB and CCMHB	BN39B-04
	10-m cable for CCMAB and CCMHB	BN39B-10
	Copper-to-single mode fiber optic converter	CCMFB-AA
	Rackmount kit for CCMHB hub (3U height supports two hubs and four ES40 systems)	3X-BA61R-MC
	Power cord for rackmount CCMHB hub	BN35S-02

Step 13 – MEMORY CHANNEL – Optional *(continued)*

MEMORY CHANNEL Power Cords	Australia, New Zealand	BN19H-2E
	Central Europe	BN19C-2E
	Denmark	BN19K-2E
	Egypt, India	BN19S-2E
	Ireland, United Kingdom	BN19A-2E
	Israel	BN18L-2E
	Italy	BN19M-2E
	Switzerland	BN19E-2E

Step 14 – Graphics Adapters – Optional

- RAID Configuration Utility is accessible via console port; optional graphics capability is available
- Select graphics adapter, monitor, and country-specific keyboard for Tru64 UNIX and OpenVMS systems if required

	Maximum # Supported		
	Tru64 UNIX	**OpenVMS**	
3Dlabs Oxygen VX1 32-MB PCI 2D graphics acclerator	1	1	SN-PBXGF-AB
PowerStorm 4D51T advanced 3D graphics accelerator	4	-	SN-PBXGI-AD
PowerStorm 300 3D multi-head graphics accelerator with 15-MB frame buffer memory and 16-MB texture memory	8	4	SN-PBXGD-AD
PowerStorm 350 3D multi-head graphics accelerator with 30-MB frame buffer memory and 32-MB texture memory	8	4	SN-PBXGD-AE

Note: PowerStorm 300 and PowerStorm 350 adapters require the following:

OpenVMS V7.1-2 (minimum version required) requires the following Tima Kits:
- DEC-AXPVMS-VMS712_UPDATE-V0300--4.PCSI
- DEC-AXPVMS-VMS62TO71U2_PCSI-V0200--4.PCSI
- DEC-AXPVMS-VMS712_P350-V0100--4.PCSI

OpenVMS V7.1-2 requires the following Tima Kits:
- DEC-AXPVMS-VMS721_PCSI-V010--4.PCSI
- DEC-AXPVMS-VMS721_UPDATE-V0100--4.PCSI
- DEC-AXPVMS-VMS721_P350-V0100--4.PCSI

Tru64 UNIX V4.0F (minimum version required) requires Patch Kit 1 with Environmental Patch

PowerStorm 300 and PowerStorm 350 adapters can be combined, providing the system maximum is not exceeded.

Options

Step 15 – Monitors – Optional

- Graphics monitors other than those listed can be used if compatible with SVGA graphics ordered with system
- Video extension cable required if monitor is located more than 1 meter from server
- Monitors will ship with, but not be integrated with systems.

V570 15-inch (13.8-inch viewable image size) multiple-scan color monitor with Invar Shadow Mask, VGA to 1024 x 768 @ 75 Hz, 0.28mm AG, TCO99; Northern Hemisphere with NA power cord	3R-A3082-AA
Same as above with Eurocord	3R-A3083-AA
Same as above, APD, no power cord	3R-A3084-AA
V500 15-inch (13.8-inch viewable image size) auto-scanning color monitor, VGA to 1024 x 768 @75 Hz, 0.28mm FST, MPRII Southern Hemisphere with Australia/New Zealand power cord	3R-VRQV5-11
P710 17-inch (16-inch viewable image size) auto-scanning color monitor, Diamondtron NF, 0.25mm aperture grille pitch, VGA to 1280 x 1024 @ 75 Hz, TCO 99; Northern Hemisphere with NA power cord	3R-A2936-AA
Same as above, APD, no power cord	3R-A2260-AA
Same as above, PRC with power cord, CCIB	3R-A3335-AA
Same as above, Southern Hemisphere, with Australia/New Zealand power cord	3R-A2263-AA
Same as above, Northern Hemisphere, with power factor correction and Eurocord, 220V only	3R-A2261-AA
TFT8020 18-inch (18.1-inch viewable image size) flat panel monitor, 0.28mm DP, 1280x 1024 @75 Hz, TCO 99, U.S. power cord – Use with SN-PBXGD-A* or SN-PBXGK-BB (326100-001)	3R-A0852-AA
P910 19-inch (18-inch viewable image size) auto-scanning color monitor, Diamondtron NF, 0.25mm aperture grille pitch, VGA to 1280 x 1024 @ 85 Hz, TCO 99; Northern Hemisphere with NA power cord	3R-A2935-AA
Same as above, PRC with power cord, CCIB	3R-A3334-AA
Same as above, Southern Hemisphere with Australia/New Zealand power cord	3R-A2267-AA
Same as above, Northern Hemisphere, with power factor correction and Eurocord, 220V only	3R-A2265-AA
P1100 21-inch (19.8-inch viewable image size) auto-scanning color monitor, Trinitron, 0.28mm aperture grille pitch, VGA to 1600 x 1200 @ 85 Hz, TCO 99 with Australia/New Zealand power cord	3R-VRQP1-23
P1210 22-inch (20-inch viewable image size) auto-scanning color monitor, Diamondtron NF, 0.24mm aperture grille pitch, VGA to 1600 x 1200 @ 85 Hz, TCO 99 with power factor correction, Northern Hemisphere with NA power cord	3R-A2934-AA
Same as above with Eurocord	3R-VRQP2-24
Same as above, APD, no power cord	3R-A2268-AA
Same as above, PRC with power cord, CCIB	3R-A3333-AA

Video Extension Cable	1.8-meter video extension cable–optional	BN39C-02

Monitor Power Cords	North American, 120V, 75-inch	BN26J-1K
	Australia, New Zealand, 2.5-meter	BN19H-2E
	Central Europe, 2.5-meter	BN19C-2E
	Denmark, 2.5-meter	BN19K-2E
	Egypt, India, South Africa, 2.5-meter	BN19S-2E
	Israel, 2.5-meter	BN18L-2E
	Italy, 2.5-meter	BN19M-2E
	Japan, 2.5-meter, Dentori approved	3X-BN46F-02
	Switzerland, 2.5-meter	BN19E-2E
	UK, Ireland, 2.5-meter	BN19A-2E

Step 16 – Keyboards, Power Cords, Documentation

Step 16a – Keyboards – Required for all non-North American systems

- Systems ordered in North America include U.S. English keyboard; selection of country-specific keyboard is mandatory for all non-North American systems

	Tru64 UNIX	OpenVMS
U.S./English keyboard	SN-LKQ47-AA	LK461-A2
Arabic keyboard	SN-LKQ47-BR	-
Belgian keyboard	SN-LKQ47-AB	LK461-AB
BHCSY keyboard	SN-LKQ47-AX	-
Canadian/English keyboard	-	LK461-AQ
Canadian/French keyboard	SN-LKQ47-AC	LK461-AC
Cyrillic keyboard	SN-LKQ47-BT	LK461-BT
Czech keyboard	SN-LKQ47-BV	LK461-BV
Danish keyboard	SN-LKQ47-AD	LK461-AD
Dutch keyboard	SN-LKQ47-AH	LK461-AH
Finnish keyboard	SN-LKQ47-AF	LK461-AF
French keyboard	SN-LKQ47-AP	LK461-AP
German keyboard	SN-LKQ47-AG	LK461-AG
Greek keyboard	SN-LKQ47-BH	LK461-BH
Hebrew keyboard	SN-LKQ47-AT	LK461-AT
Hungarian keyboard	SN-LKQ47-BQ	LK461-BQ
International keyboard	SN-LKQ47-BA	-
Italian keyboard	SN-LKQ47-AI	LK461-AI
Korean keyboard	SN-LKQ47-BK	-
Latin-American keyboard	SN-LKQ47-AR	-
Norwegian keyboard	SN-LKQ47-AN	LK461-AN
Polish keyboard	SN-LKQ47-BP	LK461-BP
Portuguese keyboard	SN-LKQ47-AV	LK461-AV
Romanian keyboard	-	LK461-BL
S. Chinese keyboard	SN-LKQ47-CV	-
Slovak keyboard	SN-LKQ47-CZ	LK461-CZ
Spanish keyboard	SN-LKQ47-AS	LK461-AS
Swedish keyboard	SN-LKQ47-AM	LK461-AM
Swiss/French keyboard	SN-LKQ47-AK	LK461-AK
Swiss/German keyboard	-	LK461-AL
Taiwanese keyboard	SN-LKQ47-BI	-
Thai keyboard	SN-LKQ47-CB	-
Turkish keyboard	SN-LKQ47-BU	LK461-BU
Turkish/French keyboard	-	LK461-BW
UK keyboard	SN-LKQ47-AE	-
Yugoslavian keyboard	-	LK461-BY

Keyboard or Mouse Extension Cable	6-foot keyboard or mouse extension cable; to extend both keyboard and mouse order two cables	3X-BC34A-06

Options

Step 16 – Keyboards, Power Cords, Documentation *(continued)*

Step 16b – Power Cords

Tower Power Cords	• Tower enclosure ordered in North America includes 120V power cord; selection of country-specific power cord is mandatory for all non-North American systems.	
	• Each additional power supply ordered with a system installed in tower enclosure requires additional power cord	
Pedestal Power Cords	• Pedestal systems ordered in North America include two 120V power cords; selection of two country-specific power cords is mandatory for all non-North American systems.	
	North American 120V, 75-inch	BN26J-1K
	Australia, New Zealand, 2.5-meter	BN19H-2E
	Central Europe, 2.5-meter	BN19C-2E
	Denmark, 2.5m	BN19K-2E
	Egypt, India, South Africa, 2.5-meter	BN19S-2E
	Israel, 2.5-meter	BN18L-2E
	Italy, 2.5-meter	BN19M-2E
	Japan, 2.5-meter	3X-BN46F-02
	Switzerland, 2.5-meter	BN19E-2E
	UK, Ireland, 2.5-meter	BN19A-2E

Step 16c – Documentation

Additional AlphaServer ES40 System Information Kit (print and CD), Owners Guide, User Interface Guide, and Release Notes	QA-6E88A-G8

Step 17 – Console Terminal – Optional

• Any terminal can be used as a console device	
• Third-party console devices require an EIA-232 25-pin DSUB connector	
VT510 video terminal; requires keyboard, H8575-x adapter, and BC16E-x cable	VT510-xx
Console cable, female connector (25-pin passive adapter)	H8575-A
Console cable, male connector (adapter with EOS, ESD, 25 POS D-SUB)	H8575-D

Step 18 – Upgrade Kit – Optional

Upgrades ES40 Model 1 with six I/O slots and support for four memory options to ES40 Model 2 with 10 I/O slots and support for eight memory options	3X-KFPPA-AA

Step 19 – Software – Required selection of media and documentation for first system on site

- Software Processor Code = E

Tru64 UNIX	• AlphaServer ES40 Tru64 UNIX systems include Unlimited User license, Server Extension license, Internet Express, iPlanet Directory Server, iPlanet Enterprise Server, and Compaq Secure Web Server
	• AlphaStation ES40 Tru64 UNIX systems include pre-installed software, 2-user Base license and Compaq Open3D traditional license

Step 19 – Software – Required selection of media and documentation for first system on site *(continued)*

When using Tru64 UNIX V5.0A or later	Tru64 UNIX media and online documentation on CD-ROM	QA-6ADAA-H8
	Tru64 UNIX full hard copy documentation	QA-6ADAA-GZ
	StorageWorks Software Package, with licenses for Logical Storage Manager and AdvFS Utilities	QB-5RXAE-AA
	TruCluster Server License	QL-6BRAE-AA
	Advanced Server for Tru64 UNIX, 25 client concurrent use license	QL-5U29M-3D
	Advanced Server for Tru64 UNIX, 50 client concurrent use license	QL-5U29M-3E
	Advanced Server for Tru64 UNIX, 100 client concurrent use license	QL-5U29M-3F
	Advanced Server for Tru64 UNIX, 250 client concurrent use license	QL-5U29M-3G
	Advanced Server for Tru64 UNIX, 500 client concurrent use license	QL-5U29M-3H
	Layered products media and documentation for Tru64 UNIX on CD-ROM	QA-054AA-H8
	DECnet/OSI extended function license for Tru64 UNIX	QL-MTJAE-AA
	DECnet/OSI end-system license for Tru64 UNIX	QL-MTKAE-AA
	Open3D for Tru64 UNIX on CD-ROM, includes graphics drivers	QA-OAFAA-H8
When using Tru64 UNIX V4.0F	Tru64 UNIX media and online documentation on CD-ROM	QA-MT4AA-H8
	Tru64 UNIX full hard copy documentation	QA-MT4AA-GZ
	StorageWorks Software Package, with licenses for Logical Storage Manager and AdvFS Utilities	QB-5RXAE-AA
	TruCluster Available Server License	QL-05SAE-AA
	TruCluster Production Server License	QB-3RLAE-AA
	Tru64 UNIX Driver for MEMORY CHANNEL license	QB-4ZCAE-AA
	Advanced Server for Tru64 UNIX, 25 client concurrent use license	QL-5U29M-3D
	Advanced Server for Tru64 UNIX, 50 client concurrent use license	QL-5U29M-3E
	Advanced Server for Tru64 UNIX, 100 client concurrent use license	QL-5U29M-3F
	Advanced Server for Tru64 UNIX, 250 client concurrent use license	QL-5U29M-3G
	Advanced Server for Tru64 UNIX, 500 client concurrent use license	QL-5U29M-3H
	Layered products media and documentation for Tru64 UNIX on CD-ROM	QA-054AA-H8
	DECnet/OSI end-system license for Tru64 UNIX	QL-MTJAE-AA
	DECnet/OSI extended function license for Tru64 UNIX	QL-MTKAE-AA
	Open3D for Tru64 UNIX on CD-ROM, includes graphics drivers	QA-OAFAA-H8
OpenVMS	• AlphaServer ES40 OpenVMS systems include Base license with System Manager license and Compaq Enterprise Integration Server License Package for OpenVMS Revision V3.1	
	• AlphaStation ES40 OpenVMS systems include pre-installed software, Base license, Concurrent Use 1-user license, NAS 150 Client license, Compaq MMS RT license and Compaq Open3D traditional license	
	• Compaq Enterprise Integration Package includes licenses for TCP/IP Services for OpenVMS, DECwindows Motif for OpenVMS Alpha, DECprint Supervisor for OpenVMS Alpha Plus, DECprint Supervisor for OpenVMS Open, DECnet-Plus for OpenVMS Alpha End System, Archive/Backup System for OpenVMS Management Tools, Archive/Backup Agent for Windows NT, OpenVMS Disk Services for Windows NT, Office Server for OpenVMS, PATHWORKS 32, PATHWORKS V6 for OpenVMS – Advanced Server, and DIGITAL Office Server Client Access License	
	• OpenVMS Concurrent Use licenses provide the right to interactively use the operating system by the specified number of concurrent users on a designated OpenVMS system. OpenVMS Concurrent Use licenses can be moved from one system to another at user discretion and can be shared in a mixed OpenVMS VAX and OpenVMS Alpha cluster.	
	• OpenVMS Traditional Unlimited Use license is system specific and can only be used on one system at a time. It cannot be shared between systems or in an OpenVMS VAX or OpenVMS Alpha Cluster.	

Step 19 – Software – Required selection of media and documentation for first system on site *(continued)*

OpenVMS	Concurrent Use 1-user license	QL-MT3AA-3B
	Concurrent Use 2-user license	QL-MT3AA-3C
	Concurrent Use 4-user license	QL-MT3AA-3D
	Concurrent Use 8-user license	QL-MT3AA-3E
	Concurrent Use 16-user license	QL-MT3AA-3F
	Concurrent Use 32-user license	QL-MT3AA-3G
	Concurrent Use 64-user license	QL-MT3AA-3H
	Concurrent Use 128-user license	QL-MT3AA-3J
	Concurrent Use 256-user license	QL-MT3AA-3K
	Traditional unlimited user license	QL-MT2AE-AA
	OpenVMS V7.1-2 media and online documentation on CD-ROM	QA-MT1AR-H8
	OpenVMS V7.3 media and online documentation on CD-ROM	QA-MT1AT-H8
	OpenVMS media and documentation on CD-ROM	QA-MT1AA-H8
	OpenVMS full hard copy documentation	QA-001AA-GZ
	Layered products media and documentation for OpenVMS on CD-ROM, includes Enterprise Integration Server for OpenVMS media and documentation.	QA-03XAA-H8
	DECnet extended function license for OpenVMS	QL-MTGAE-AA
	DECnet end-system to extended function upgrade license for OpenVMS	QL-MTHAE-AA
	OpenVMS Cluster license for Alpha systems	QL-MUZAE-AA
	OpenVMS Volume Shadowing license	QL-2A1AE-AA

Step 20 – Hardware and Software Support Services

- Select one of the optional CarePaq Priority Service Packages described below that best supports the customer's operational requirements for system availability.

CarePaq Priority Services

- CarePaq Priority Services are available for Compaq AlphaServer systems running Compaq Tru64 UNIX or OpenVMS operating systems. Priority Services are designed for the growing number of customers who need support beyond the basic warranty. It offers five services packages − Priority, Priority 24, Priority Silver, Priority Gold, and Priority Executive with coverage for both principal server systems and SSPs (Subsequent System Packages) - that meet a full range of customer support requirements.

Program Features – Principal Server

Priority

- 9x5 HW/SW support
- 4-hour response on-site hardware support
- 2-hour response for Bronze software support
- License Subscription for Compaq O/S software and embedded L/P (i.e., EIS for OpenVMS, unlimited users, and server extensions for Tru64 UNIX
- Condist update distribution for OpenVMS or Tru64 UNIX and their layered products. (Layered products not included on Condist can be ordered separately.)

Options

Step 20 – Hardware and Software Support Services *(continued)*

Program Features – Principal Server *(continued)*

Priority 24	• 24x7 HW/SW support
	• Named HW engineer
	• 4-hour response on-site hardware support
	• 2-hour response for Bronze software support
	• License Subscription for Compaq O/S software and embedded L/P (i.e., EIS for OpenVMS, unlimited users and server extensions for Tru64 UNIX
	• Condist update distribution for OpenVMS or Tru64 UNIX and their layered products. (Layered products not included on Condist can be ordered separately
Priority Silver	• 24x7 HW Support. Named Engineer, 4-hour response
	• 24x7 Silver SW Support - Named Account Rep, 1-hour response Monday – Friday, 8AM-5PM local time; 2-hour response remaining hours
	• License Subscription for Compaq O/S software and embedded L/P (i.e., EIS for OpenVMS, unlimited users, and server extensions for Tru64 UNIX
	• Condist update distribution for OpenVMS or Tru64 UNIX and their layered products. (Layered products not included on Condist can be ordered separately)
	• Technical newsletter and SW activity review
	• Proactive Patch Notification
	• One System Healthcheck per year
Priority Gold	• 24x7 HW support with Named Engineer, 4-hour response for on-site support
	• 24x7 Gold SW support - Named Account Rep
	• 30-minute callback (critical); 1-hour callback (non-critical)
	• License Subscription for Compaq O/S software and embedded L/P (i.e., EIS for OpenVMS, unlimited users, and server extensions for Tru64 UNIX
	• Condist update distribution for OpenVMS or Tru64 UNIX and their layered products. (Layered products not included on Condist can be ordered separately)
	• Technical newsletter, SW activity review and 10 hrs Upgrade impact planning
	• Proactive Revision Management
	• Two System Healthchecks per year
	• Mandatory pre-qualification required
Priority Gold Executive	• 24x7 HW support with Named Engineer, 2-hour response for on-site support
	• 24x7 Gold SW support - Named Account Rep
	• 30-minute callback (critical); 1-hour callback (non-critical)
	• License Subscription for Compaq O/S software and embedded L/P (i.e., EIS for OpenVMS, unlimited users, and server extensions for Tru64 UNIX.
	• Software update distribution on CD-ROM: OpenVMS or Tru64 UNIX and their layered products (L/P not on CDDS are ordered separately)
	• Technical newsletter, SW activity review and 10 hrs Upgrade impact planning
	• Proactive Revision Management
	• Two System Healthchecks per year
	• Customer site must be within 25 miles of a Compaq service location
	• Mandatory pre-qualification required

Step 20 – Hardware and Software Support Services *(continued)*

Program Features – Additional Services

SSPs (Subsequent System Packages)
- For Priority, Priority 24, Priority Silver, Priority Gold, and Priority Gold Executive
- HW Support at same level as corresponding package for Principal server
- License Subscription: Compaq O/S (where applicable)
- Telephone support through Principal server covered by full support package

Installation
- Preinstallation review
- Unpacking of equipment
- Assemble and test
- Basic product usage info
- No software installation added

Installation & Startup Compaq O/S
- Preinstallation review
- Unpacking of equipment
- Assemble and test
- Basic product usage info
- Install operating systems
- Product configuration
- Print & network access
- Orientation

Model/CarePaq Priority Service	Principal Server 1 year	Principal Server 3 years	Subsequent Systems 1 year	Subsequent Systems 3 years
AlphaServer ES40 Model 1 Pedestal				
Priority	FP-F01AA-12	FP-F01AA-36	FP-F21AA-12	FP-F21AA-36
Priority 24	FP-F02AA-12	FP-F02AA-36	FP-F22AA-12	FP-F22AA-36
Priority Silver	FP-F04AA-12	FP-F04AA-36	FP-F24AA-12	FP-F24AA-36
Priority Gold	FP-F08AA-12	FP-F08AA-36	FP-F28AA-12	FP-F28AA-36
Priority Gold Exec.	FP-F09AA-12	FP-F09AA-36	FP-F29AA-12	FP-F29AA-36
Installation	FP-FINST-AA	FP-FINST-AA	FP-FINST-AA	FP-FINST-AA
Installation & Startup	FP-FSTAR-AA	FP-FSTAR-AA	FP-FSTAR-AA	FP-FSTAR-AA
AlphaServer ES40 Model 2 Pedestal				
Priority	FP-F01BA-12	FP-F01BA-36	FP-F21BA-12	FP-F21BA-36
Priority 24	FP-F02BA-12	FP-F02BA-36	FP-F22BA-12	FP-F22BA-36
Priority Silver	FP-F04BA-12	FP-F04BA-36	FP-F24BA-12	FP-F24BA-36
Priority Gold	FP-F08BA-12	FP-F08BA-36	FP-F28BA-12	FP-F28BA-36
Priority Gold Exec.	FP-F09BA-12	FP-F09BA-36	FP-F29BA-12	FP-F29BA-36
Installation	FP-FINST-BA	FP-FINST-BA	FP-FINST-BA	FP-FINST-BA
Installation & Startup	FP-FSTAR-BA	FP-FSTAR-BA	FP-FSTAR-BA	FP-FSTAR-BA

Options

Step 20 – Hardware and Software Support Services *(continued)*

Model/CarePaq Priority Service	Principal Server 1 year	Principal Server 3 years	Subsequent Systems 1 year	Subsequent Systems 3 years
AlphaServer ES40 Model 1 Tower/Drawer				
Priority	FP-F01CA-12	FP-F01CA-36	FP-F21CA-12	FP-F21CA-36
Priority 24	FP-F02CA-12	FP-F02CA-36	FP-F22CA-12	FP-F22CA-36
Priority Silver	FP-F04CA-12	FP-F04CA-36	FP-F24CA-12	FP-F24CA-36
Priority Gold	FP-F08CA-12	FP-F08CA-36	FP-F28CA-12	FP-F28CA-36
Priority Gold Exec.	FP-F09CA-12	FP-F09CA-36	FP-F29CA-12	FP-F29CA-36
Installation	FP-FINST-CA	FP-FINST-CA	FP-FINST-CA	FP-FINST-CA
Installation & Startup	FP-FSTAR-CA	FP-FSTAR-CA	FP-FSTAR-CA	FP-FSTAR-CA
AlphaServer ES40 Model 2 Tower/Drawer				
Priority	FP-F01DA-12	FP-F01DA-36	FP-F21DA-12	FP-F21DA-36
Priority 24	FP-F02DA-12	FP-F02DA-36	FP-F22DA-12	FP-F22DA-36
Priority Silver	FP-F04DA-12	FP-F04DA-36	FP-F24DA-12	FP-F24DA-36
Priority Gold	FP-F08DA-12	FP-F08DA-36	FP-F28DA-12	FP-F28DA-36
Priority Gold Exec.	FP-F09DA-12	FP-F09DA-36	FP-F29DA-12	FP-F29DA-36
Installation	FP-FINST-DA	FP-FINST-DA	FP-FINST-DA	FP-FINST-DA
Installation & Startup	FP-FSTAR-DA	FP-FSTAR-DA	FP-FSTAR-DA	FP-FSTAR-DA

Notes:

- AlphaServer ES40 systems include three years hardware warranty with 5x9, on-site Next Business Day response.
- New Compaq hardware options internal to the AlphaServer enclosure receive the same warranty or service level as purchased with the server.
- External storage devices/cabinets carry their own level of warranty and should be quoted separately for uplifted warranty services (CarePaq Priority Service).
- In addition to the CarePaq Priority Services, uplifted warranty Supplemental Services are available for separate hardware and software support. For more information on Hardware and Software Supplemental Services and other Compaq service options available for AlphaServers, consult a Compaq Sales Account Manager or visit http://www.compaq.com/services/

Technical Specifications

Tower Configuration	**Dimensions** (HxWxD)	20 x 15.25 x 31 in / 50.8 x 38.7 x 78.7 cm	
	Shipping Dimensions	32.2 x 24 x 40 in / 82.48 x 60.2 x 101.6 cm	
	Weight	Typical Configuration	144.3 lbs/65.6 kg
		Maximum Configuration	212.8 lbs/96.7 kg
	Shipping Weight	Typical Configuration	172 lbs/78 kg
		Maximum Configuration	242 lbs/110 kg
	Clearances	**Operating**	**Service**
	Front	29.5 in/75 cm	29.5 in/75 cm
	Rear	6 in/15 cm	29.5 in/75 cm
	Left Side	None	29.5 in/75 cm
	Right Side	None	None
Pedestal Configuration	**Dimensions** (HxWxD)	30.8 x 20 x 31.75 in/78.2 x 50.8 x 80.6 cm	
	Shipping Dimensions	42.4 x 39.5 x 23.9 in/107.7 x 100.3 x 60.7 cm	
	Weight	Typical Configuration	280 lbs/127 kg
		Maximum Configuration	350 lbs/159 kg
	Shipping Weight	Typical Configuration	328 lbs/149 kg
		Maximum Configuration	407 lbs/185 kg
	Clearances	**Operating**	**Service**
	Front	29.5 in/75 cm	29.5 in/75 cm
	Rear	6 in/15 cm	29.5 in/75 cm
	Left Side	None	None
	Right Side	None	29.5 in/75 cm
Rackmount System	**Dimensions** (HxWxD)	13.87 x 17.6 x 30.1 in/35.2 x 44.7 x 76.5 cm (fits 14 in [8U] standard RETMA cabinet)	
	Shipping Dimensions	28.8 x 24 x 40 in/73.2 x 60.7 x 101.6 cm	
	Weight	When lifting:	
		Nominal	110 lbs/50 kg
		Maximum	167.2 lbs/76 kg
		Total added to cabinet (brackets, slides, cables):	
		Nominal	130 lbs/59 kg
		Maximum	202.4 lbs/92 kg
	Shipping Weight	Nominal	158 lbs/72 kg
		Maximum	233 lbs/106 kg
	Clearances	**Operating**	**Service**
		See specific cabinet requirements	Minimum 4 ft/121.9 cm, 30 in/76.3 cm withdrawal on rails
Cabinet Configuration		**H9A10 M-Series**	**H9A15 M-Series**
	Dimensions (HxWxD) (Depth includes rear door extender)	67 x 23.6 x 41.5 in/ 170 x 60 x 105.4 cm	79 x 23.6 x 41.5 in/ 200 x 60 x 105.4 cm
	Shipping Dimensions	73 x 36 x 48 in/ 185.5 x 91.5 x 122 cm	85 x 36 x 48 in/ 216 x 91.5 x 122 cm
	Weight	Configuration dependent	Configuration dependent
	Shipping Weight	Nominal: 946 lbs/430 kg	Nominal: 1,056 lbs/550 kg
		Maximum: 1,375 lbs/625 kg	Maximum: 1,408 lbs/640 kg)

Technical Specifications

System Unit

Environmental

Temperature	Operating (Tower, Pedestal, Rackmount)	50° to 95° F/10° to 35° C
	Non-operating	-40° to 151° F/-40° to 66° C
	Storage (60 days)	-40° to 151° F/-40° to 66° C
	Rate of change	20°F/hr/11°C/hr
	Note: Maximum operating temperature at sea level; reduce by 1.8°F (1°C) for each 2,000 ft (600 m) above sea level.	
Humidity	Operating	20% to 80%
	Non-operating	20% to 80%
	Storage (60 days)	10% to 95%
	Rate of change	20% hr
Maximum Wet Bulb Temperature	Operating	82° F/28° C
	Storage (60 days)	115° F/46° C
Maximum Dew Point Temperature	Operating	36° F/2° C
Heat Dissipation	**Nominal**	**Maximum**
Tower and Rack	900W, 3,074 BTU/hr	1300W, 4,440 BTU/hr
Pedestal	1480W, 5,054 BTU/hr	2400W. 8,196 BTU/hr
H9A10/H9A15 Cabinets	Configuration dependent	4800W, 16,392 BTU/hr
Air Flow and Quality	Intake location	Front
	Exhaust location	Rear Tower, Pedestal, Rack; Rear/top H9A10/H9A15
	Particle size	N/A
	Concentration	N/A
Altitude	Operating	10,000 ft/3,048 m
(unpressurized)	Non-operating	40,000 ft/12,192 m
	Note: Higher altitudes are possible if maximum operating temperature is reduced (see Temperature); other restrictions may apply such as maximum permissible altitude for hard drives.	

Acoustics (Declared values per ISO 9296 and ISO 7779)

Acoustics	L_{WAd3}B	L_{nAm5}dBA (bystander position)
Idle	6.6	48
Operating	6.6	48
	Note: Current values for specific configurations are available from Compaq, note that 1 B = 10 dBA.	

Electrical (Power supplies are universal, PFC, auto ranging, 100/240 Vac)

Nominal Voltage (Vac)	100	120	200 to 240
Voltage Range (Vac) (temporary condition)	90 to 100	110 to 128	180 to 250
Power Source Phase	Single	Single	Single
Nominal Frequency (Hz)	50/60	50/60	50/60
Frequency Range (Hz)	49 to 51/59 to 61	49 to 51/59 to 61	49 to 51/59 to 61

Technical Specifications

System Unit *(continued)*

Electrical *(continued)*

RMS Current			
Tower and Rackmount			
Single power cord	11.0A	8.5A	5.0A
Multiple power cords	6.5A	5.3A	3.0A
Maximum VA	1,300	1,270	1,250
Pedestal			
Each power cord	12.0A	10.5A	6.0A
Maximum VA	1,960	1,900	1,880
M-series Cabinet (configuration dependent)			
Nominal voltage (VAC)	100	120	220 to 240
Each power cord	24A	24A	16A

Power Cords		
Tower	Up to 3 (75 in/190 cm)	IEC 320 C13 to NEMA 5-15 (N. America) or IEC 320 C13 to country-specific
Pedestal	2 (75 in/190 cm)	120V non-removable NEMA 5-15 (N. America) or 200-240V IEC 320 C13 to country-specific
Rackmount	3 (14 ft 10 in/52 cm)	IEC 320 C13 to NEMA 5-15 (N. America) or IEC 320 C13 to IEC 320 C14 (other countries)
Cabinet	2 (10 ft 10 in/30 cm)	120V non-removable NEMA L5-30P or 200-240V non-removable IEC 309

Regulatory		
	Agency Approvals	UL: Listed to UL1950 (third edition)
		CSA: Certified to CAN/CSA-C22.2 No. 950-M95
		TUV: EN 60950/A4: 1997 VDE 0805 GS marked
		FCC: Part 15.B Class A
		CE: EN55022, EN50082
		VCCI Class II ITE
		BCIQ: CISPR22, CNS13438
		C-Tick: CISPR22, AS/NZS 3548
	Reviewed to	AS/NZ 3260:1993 Australian/New Zealand Standard
		EN 60950/A4: 1997 European Norm
		IEC 950 (second edition, third amend)