Overview

At A Glance

AlphaServer™/*AlphaStation* ™ ES40 Systems include:

- Alpha 21264 68/833-MHz CPU with 8-MB L2 Dual Data Rate Cache
- 6-10 64-bit PCI I/O expansion slots
- 512-MB, 1-GB, 2-GB, or 4-GB memory options (AlphaServers)
- 512-MB memory option (AlphaStations)
- 1.44-MB diskette drive
- 600-MB 48X IDE CD-ROM drive
- Two 9-pin serial ports
- One 25-pin parallel port
- RMC dedicated serial port, 6-pin MMJ connector
- Dual USB ports
- Keyboard and mouse port
- Knockouts for two 68-pin SCSI connections
- Auto-sensing power supply
- Integral remote system management console
- Customer documentation
- *Tru64*™ UNIX™ or *OpenVMS*™ Factory Installed Software
- 90-day software warranty
- Protected by HP Services, including three-year hardware warranty, on-site with 5 x 9 next business day response. Certain restrictions and exclusions apply. For details, consult the Product Information Centre at 1-888-882-6672.

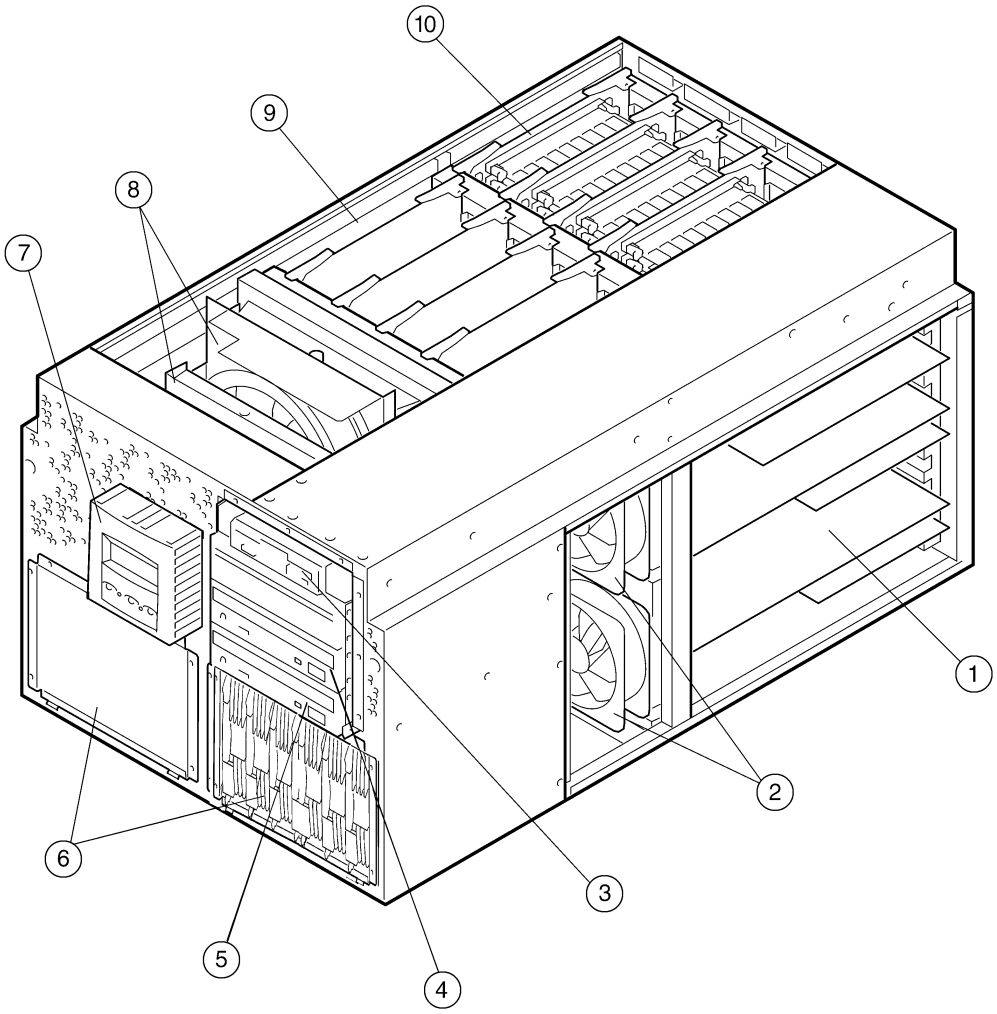

1. PCI cards
2. Fans
3. Diskette drive
4. Removable media bays
5. CD-ROM drive
6. 6-bay disk drive storage cages
7. Control panel
8. Fans
9. CPUs
10. Memory

Standard Features

Processor	Alpha 21264 68/833-MHz CPU	
Cache Memory	8-MB L2 Dual Data Rate Backup Cache (68/833-MHz CPU)	
Upgradability	Supports additional processors and upgrades of memory and hard drives	
Memory	Minimum	512 MB – AlphaServer ES40 Model 1
		512 MB – AlphaStation ES40
		1 GB – AlphaServer ES40 Model 2
	Maximum	16 GB (16 DIMM slots) Model 1; 32 GB (32 DIMM slots) Model 2 (see Step 3)
Network Controller	Choice of Ethernet controllers	
Expansion	PCI I/O slots	6 slots Model 1; 10 slots Model 2
Storage	Diskette Drive	1.44-MB diskette drive in dedicated slot
	CD-ROM	600-MB 48X IDE CD-ROM
	Hard Drives	Choice of 18.2-GB, 36.4-GB, 72.8-GB, or 146-GB drives
Interfaces	Parallel	1 25-pin parallel port
	Serial	2 9-pin serial ports
	USB	Dual USB ports
	Keyboard	1 port
	Mouse	1 port
	Remote systems management	1 dedicated remote systems management port
	SCSI connections	Two 68-pin SCSI connections knockouts
Graphics	Optional	
Form Factor	Tower, Pedestal, Rackmount (M-Series Cabinet)	
Power Supply	Auto sensing power supply, hot swappable, N+1 (see Step 4)	
Manageability	Compaq *Insight Manager*™	
OS Support	AlphaServer ES40 Tru64 UNIX systems include pre-installed software, Base license, Unlimited User license, Server Extension license, Internet Express, and Secure Web Server	
	AlphaStation ES40 Tru64 UNIX systems include pre-installed software, 2-user Base license and Compaq Open3D traditional license	
	AlphaServer ES40 OpenVMS systems include pre-installed software, Base license with System Manager license and Enterprise Integration Server License Package for OpenVMS V3.1	
	AlphaStation ES40 OpenVMS systems include pre-installed software, Base license, Concurrent Use 1-user license, NAS 150 Client license, Compaq MMS RT license and Compaq Open3D traditional license	
	Minimum OS support – Tru64 UNIX V4.0F, OpenVMS V7.2-2, Linux RedHat V6.2, Linux SuSE V6.3 or greater	
Service and Support	Protected by HP Services including a three-year on-site hardware warranty with next business day response. Software warranty is a 90-day telephone advisory. Training, consulting, network integration, software support, comprehensive system maintenance and guaranteed uptime services are also available for customers requiring higher levels of service and support. Certain restrictions and exclusions apply. For details, consult the Product Information Centre at 1-888-882-6672.	

Systems/Options

Step 1 – Select system

AlphaServer ES40 systems require the **mandatory** selection of the following items:

- Disk drive cage or *StorageWorks*™ shelf (Step 5)
- System disk drive (Step 5)
- System enclosures: Tower, Pedestal, or Rack Kit (Step 6)
- Ethernet adapter (Step 8)
- Storage adapter (Step 10)
- Software media and documentation for first system onsite

NOTES: ES40 Model 1 to Model 2 Upgrade Kit available – see Step 16.
Only 2-5-2 part numbers are factory integrated.

AlphaServer ES40 Systems					
ES40	**OS**	**CPU**	**PCI I/O Slots**	**Memory/Cache**	**Order Number**
Model 1	Tru64 UNIX	833 MHz	6	512 MB/8 MB	DA-62CAA-CA
Model 1	Tru64 UNIX	833 MHz	6	1 GB/8 MB	DA-62CAA-DA
Model 1	Tru64 UNIX	833 MHz	6	2 GB/8 MB	DA-62CAA-EA
Model 2	Tru64 UNIX	833 MHz	10	512 MB/8 MB	DA-64CAA-CA
Model 2	Tru64 UNIX	833 MHz	10	1 GB/8 MB	DA-64CAA-DA
Model 2	Tru64 UNIX	833 MHz	10	2 GB/8 MB	DA-64CAA-EA
Model 2	Tru64 UNIX	833 MHz	10	4 GB/8 MB	DA-64CAA-FA
Model 1	OpenVMS	833 MHz	6	512 MB/8 MB	DY-62CAA-CA
Model 1	OpenVMS	833 MHz	6	1 GB/8 MB	DY-62CAA-DA
Model 1	OpenVMS	833 MHz	6	2 GB/8 MB	DY-62CAA-EA
Model 2	OpenVMS	833 MHz	10	512 MB/8 MB	DY-64CAA-CA
Model 2	OpenVMS	833 MHz	10	1 GB/8 MB	DY-64CAA-DA
Model 2	OpenVMS	833 MHz	10	2 GB/8 MB	DY-64CAA-EA
Model 2	OpenVMS	833 MHz	10	4 GB/8 MB	DY-64CAA-FA
AlphaStation ES40 Systems					
Model 2	Tru64 UNIX	833 MHz	10	512 MB/8 MB	DA-64CAA-CW
Model 2	OpenVMS	833 MHz	10	512 MB/8 MB	DY-64CAA-CW

Step 2 – Additional CPU Modules – Optional

- One CPU included, three additional CPUs are supported

SMP upgrade, includes one 67/667-MHz CPU with 8-MB cache and Tru64 UNIX SMP license	KN610-BB
SMP upgrade, includes one 67/667-MHz CPU with 8-MB cache and OpenVMS SMP license	KN610-BC
SMP upgrade, includes one 68/833-MHz CPU with 8-MB cache and Tru64 UNIX SMP license	KN610-CB
SMP upgrade, includes one 68/833-MHz CPU with 8-MB cache and OpenVMS SMP license	KN610-CC

From:	To:
EV67 667-MHz CPU	**EV68 833-MHz CPU**
	Upgrade console firmware to V5.9-24 as minimum revision
	Upgrade system hardware with EV68 CPUs
	Ensure all system firmware matches console version V5.9-24
EV6 500-MHz CPU	**EV68 833-MHz CPU**
	Upgrade console firmware to V5.9-24 as minimum revision
	Upgrade system hardware with EV68 CPUs
	Re-install V5.9-24 console firmware
	Ensure all system firmware matches console version V5.9-24

Step 3 – Memory – Optional

- Systems include one memory option
- Model 1 systems supports four memory options (total of 16 DIMMs)
- Model 2 systems support eight memory options (total of 32 DIMMs – see Note below)
- Memory performance considerations: Interleaved operations reduce the average latency and increase the memory throughput over non-interleaved operations. With one memory option (4 DIMMs) installed, memory interleaving will not occur. With two identical memory options (8 DIMMs) installed, memory read-write operations are two-way interleaved. With four identical memory options (16 DIMMs) installed, memory read-write operations are four-way interleaved, maximizing memory through-put

512-MB memory option (4 x 128-MB DIMMs)	MS610-CA
1-GB memory option (4 x 256-MB DIMMs)	MS610-DA
2-GB memory option (4 x 512-MB DIMMs)	MS610-EA
4-GB memory option (4 x 1024-MB DIMMs)	MS610-FA

NOTE: ES40 configurations that require maximum N+1 power (three power supplies) are restricted to a maximum of 24-GB of mixed memory (sixteen 1-GB DIMMs and sixteen 512-MB DIMMs). If N+1 maximum power is not required, 32-GB of memory is supported.

Step 3 – Memory – Optional *(continued)*

NOTE:
Linux configurations with large memory require the installation of a patch.
The patch to support greater than 2 GB of memory per system is located at:
http://www.kernel.org/pub/linux/kernel/people/andrea/patches/v2.2/2.2.17 (patch name: bigmem-2.2.18pre2-18.bz2)
NOTE: This Web site is available in English only.
The following minimum operating system versions require the patch:

- Linux RedHat V6.2
- Linux SuSE V6.3 (Kernel V2.2.17)

The following operating system minimum versions support greater than 2 GB of memory:

- Linux RedHat V7.0 (installs Kernel V2.2.17)
- Linux SuSE V7.0 (installs Kernel V2.2.16)

When installing Linux SuSE V7.0 on a system with more than 2 GB of memory, user will be prompted for a (ramdisk) floppy. To create a floppy:

- Mount the SuSE V7.0 installation CD-ROM #1 on the system.
- Mount a blank formatted floppy (if not formatted, execute the following command: fdformat/dev/fd0H1440).
- Change directory, to the ″disks″ directory on the install CD-ROM.
- Execute the following command to create the floppy contents: dd if=install of=/dev/fd0.

Use this floppy when prompted by the install procedure for a floppy.

Step 4 – Additional Power Supplies – Required for third and fourth CPUs and/or second Disk Drive Cage

- One power supply supports two CPUs, up to 12 memory DIMMs, and one disk card cage; order second power supply if N+1 power is required.
- Two power supplies support third and fourth CPU, 13 to 32 memory DIMMs (up to 24-GB of memory), and/or two disk card cages; order third power supply if N+1 power is required for third and fourth CPUs, 24-GB of memory, and/or two disk card cages.
- Three power supplies support 32 GB of memory without N+1 power.
- Three power supplies support a maximum of 24 GB of memory with full N+1 power.
- Each additional power supply ordered with a tower system requires an additional country-specific power cord.
- Pedestal system and Rack kit include three internal power cords regardless of the number of power supplies ordered; Pedestal systems support 120 V and 240 V power cords.

ES40 720W power supply	H7906-A9

Options

Step 5 – Disk Drive Cage or StorageWorks Shelf – Mandatory

- Tower enclosure supports one system and two disk drive cages
- Pedestal enclosure supports one system and two disk drive cages, two Universal 42xx/43xx StorageWorks shelves or three BA36R StorageWorks shelves
- M-Series cabinets support five systems each with two disk drive cages and up to six StorageWorks shelves

Step 5a – Disk Drive Cage – Requires selection of system disk drive

Disk Drive Cages	6-bay disk drive cage with cable for use with 1-inch Universal drives – requires mandatory selection of UltraSCSI adapter and SCSI cable (Step 10) per disk drive cage	BA610-6D
	6-bay disk drive cage with embedded Ultra2 LVD adapter; supports internal SCSI 1-inch Universal drives or tapes only OpenVMS V7.2-2 requires OpenVMS Tima Kit located at: - http://ftp.support.compaq.com/patches/.new/openvms.shtml **NOTE**: This Web site is available in English only. Tru64 UNIX V4.0F requires Patch Kit 2 (BL13): - DUV40FAS0002-19991116.tar	BA610-6E
	NOTE: See AlphaServer ES40 Configuration Chart for Storage Adapters in Step 10.	
System Disk Drives (Supported in Disk Drive Cage and Universal StorageWorks Shelves)	18.2-GB Ultra320 SCSI 15,000 rpm 1-inch Universal disk drive	3R-A3848-AA
	36.4-GB Ultra320 SCSI 10,000 rpm 1-inch Universal disk drive	3R-A3838-AA
	36.4-GB Ultra320 SCSI 15,000 rpm 1-inch Universal disk drive	3R-A3849-AA
	72.8-GB Ultra320 SCSI 10,000 rpm 1-inch Universal disk drive	3R-A3839-AA
	72.8-GB Ultra320 SCSI 15,000 rpm 1-inch Universal disk drive	3R-A3851-AA
	146-GB Ultra320 SCSI 10,000 rpm 1-inch Universal disk drive	3R-A3841-AA

Step 5b – StorageWorks BA36R Shelf – Requires selection of UltraSCSI adapter and SCSI cable (Step 10) and system disk drive

- StorageWorks Shelf supports seven 3.5-inch x 1.6-inch hard disk drives; with addition of redundant power supply, only six drives are supported
- StorageWorks shelf kits are mounted back-to-back in pedestals and cabinets

	StorageWorks UltraSCSI single-bus shelf kit	BA36R-RC
	StorageWorks UltraSCSI split-bus shelf kit;	BA36R-RD
	NOTE: When ordering a split-bus shelf that will be mounted in a Pedestal Enclosure, order one BN37A-03 cable for KZPCM-DA adapter, BN37A-03 cable for 3X-DEPVZ-AA combo adapter, or one BN38C-03 for 3X-KZPCA-AA or KZPBA-CA adapter.	
	3-metre SCSI cable	BN37A-03
System Disk Drive (Supported in StorageWorks BA36R Shelf)	36.4-GB Wide UltraSCSI 10,000 rpm disk drive	DS-RZ1FC-VW

Step 5 – Disk Drive Cage or StorageWorks Shelf – Mandatory *(continued)*

Step 5c – StorageWorks Model 4314R and Model 4354R Universal Drive Shelves

	• StorageWorks Model 4314R and 4354R Ultra2 SCSI (LVD) single-bus and split-bus Universal drive shelves; refer to StorageWorks Enclosure 4300 Family QuickSpecs when configuring shelves. When selecting a DS-SL13R-xx split-bus shelf, order two UltraSCSI adapters. Model 43xx shelves are compatible with Wide Ultra2 (LVD) adapters only. • BN38C-05 cable is required per channel if the connection is not VHDCI/VHDCI. DS-SL13R shelves include one 12-foot VHDCI/VHDCI SCSI cable. • Note that the depth of a DS-SL13R-xx shelf does not allow front and rear mounting.	
	StorageWorks Model 4314R Ultra3 SCSI (LVD) single-bus Universal drive rackmount shelf, includes one power supply, U.S. (190209-0011)	DS-SL13R-AA
	StorageWorks Model 4314R Ultra3 SCSI (LVD) single-bus Universal drive rackmount shelf, includes one power supply, Japan (190209-291)	DS-SL13R-AJ
	StorageWorks Model 4354R Ultra3 SCSI (LVD) split-bus Universal drive rackmount shelf, includes two redundant power supplies, U.S. (190211-0011)	DS-SL13R-BA
	StorageWorks Model 4354R Ultra3 SCSI (LVD) split-bus Universal drive rackmount shelf, includes two redundant power supplies, Japan (190211-291)	DS-SL13R-BJ
	To add additional power supply for single-bus Universal shelf, U.S. (212980-B21)	DS-SE2UP-AA
	To add additional power supply for single-bus Universal shelf, International (119826-B31)	DS-SE2UP-AI
StorageWorks Model 4314T Standalone Enclosure for Universal Drives	Model 4314T Ultra3 SCSI, single-bus tower enclosure, U.S. (190210-001)	DS-SL13T-AA
	Model 4314T Ultra3 SCSI, single-bus tower enclosure, International (190210-B31)	DS-SL13T-AB
	Model 4314T Ultra3 SCSI, single-bus tower enclosure, Japan (190210-291)	DS-SL13T-AJ

Options

Step 6 – System Enclosures – Mandatory selection of Tower, Pedestal, or Rack Kit

Step 6a – Tower Enclosure

- Tower enclosure supports one system
- Tower enclosure ordered in North America includes 120V power cord; country-specific power cord mandatory for all non-North American systems; additional power cord mandatory for each power supply ordered with a system installed in a tower enclosure

Tower Enclosure	BA61M-MT

Step 6b – Pedestal Enclosure

- Pedestal enclosure supports one system, two Universal 43xx StorageWorks shelves or three UltraSCSI BA36R StorageWorks shelves
- Pedestal enclosures (BA61P-PA, 120V/BA61P-PB, 240V) support Universal shelves
- 120V pedestal enclosure includes two external 120V power cords; 240V pedestal enclosure requires two country-specific power cords
- Pedestal enclosure includes two factory-configured power strips that provide five available outlets; if the number of BA356-RC/RD power supplies requires a sixth outlet, this can be accommodated only if the system chassis is limited to two H7906-A9 power supplies

120V Pedestal Enclosure, includes two external power cords	BA61P-PA
240V Pedestal Enclosure, requires two country-specific power cords	BA61P-PB

Step 6c – Rack Kit for M-Series Cabinet

- Rack Kit required for each AlphaServer ES40 system installed in a new or existing M-Series Cabinet
- Rack Kit supports one system

Rack kit for AlphaServer ES40, includes dress bezel, slides, three internal power cords, all bracketry and hardware for mounting in M-Series cabinets	BA61R-RM

NOTE: Factory integration of an ES40 system drawer in a 9000 rackmount cabinet using rack kit, 3X-BA61R-RC, is not supported. Contact Custom Systems or Compaq Certified Integration Partner.

Step 7 – M-Series Cabinets

M-Series cabinet enclosures support up to four systems, up to six StorageWorks shelves, and/or two BA370 enclosures; M-Series Enclosures require selection of the following items:

- H9A10 or H9A15 cabinet, 120V or 240V
- Rack kit for each system
- H9A10 or H9A15 rear cabinet extender
- Cabinet front door based on cabinet height
- Factory integration
- Ballast kit if only one system is ordered for the H9A15 cabinet

NOTE: For configurations beyond those listed in the following charts, contact CustomSystems.

Options

Step 7 – M-Series Cabinets *(continued)*

Cabinet Configuration Chart for AlphaServer ES40 (8U) with StorageWorks Shelves (4U)

Cabinet	Rack Kit	Cabinet Extender	Cabinet Height/Space	Systems	BA356 Shelves	DS-SL13R 120V Shelves[2]	BA356/ DS-SL13R[3]	
							BA356	DS-SL13R
H9A10-MC/MD[1]	BA61R-RM	H9C10-TE	67-inches/34U	1	6	8	6	4
				2	6	5	6	1
				3	2	2	4	0
				4[1]	0	0	0	0
H9A15-MC/MD[4]	BA61R-RM	H9C15-TE	79-inches/41U	1	6	8	6	5
				2	6	5	6	2
				3	6	2	6	0
				4	2	0	2	0
				5[5]	0	0	0	0

NOTES:

1. Contact CustomSystems for cabinet configurations with four AlphaServer ES40 systems installed in H9C10-MC/MD cabinet.
2. Japan only – 240V cabinet required when using universal shelves
3. When using a combination of BA356 and DS-SL13R shelves in the same cabinet, do not remove the top fan (only remove fan when using DS-SL13R shelves exclusively)
4. Installation of one AlphaServer ES40 system in an H9A15 cabinet requires the mandatory selection of a ballast kit.
5. When adding the 5th system drawer, replace H7600-AA or -DB power controller with H7602-EA or -DB power controller. When replacing H7600 controllers, replace all associated power cords; order BN35S-4E power cords for H7602-EA and H7602–DB power controllers.

M-Series Cabinets

- Required selection of one cabinet
- Two H7600-xx power distribution units are standard in the M-Series cabinet
- For cabinet configurations that require a third power distribution unit (H7600-xx), contact CustomSystems at 1-800-282-6672.

67-inch cabinet with 59.5-inch or 34U of usable vertical space, 120V dual-24A controller, each with 10 NEMA 5-15R outlets, input power plug NEMA L5-30P, Americas, Asia Pacific; includes rear door and top fan tray	H9A10-MC
67-inch cabinet with 59.5-inch or 34U of usable vertical space, 240V dual-16A controller, each with 12 IEC C13 outlets, input power plug IEC 309, 16A, Europe; includes rear door and top fan tray	H9A10-MD
79-inch cabinet with 71.7-inch or 41U of usable vertical space, 120V dual-24A controller, each with 10 NEMA 5-15R outlets, input power plug NEMA L5-30P, Americas, Asia Pacific; includes rear door and top fan tray	H9A15-MC
79-inch cabinet with 71.7-inch or 41U of usable vertical space, 240V dual-16A controller, each with 12 IEC C13 outlets, input power plug IEC 309, 16A, Europe; includes rear door and top fan tray	H9A15-MD

Options

Step 7 – M-Series Cabinets *(continued)*

Rear Cabinet Extender	• Required selection of one cabinet extender for each H9A10 or H9A15 cabinet	
	Rear cabinet extender, top gun blue, for H9A10-MC/MD cabinets	H9C10-TE
	Rear cabinet extender, top gun blue, for H9A15-MC/MD cabinets	H9C15-TE
Cabinet Front Door	• Required selection of door based on cabinet height	
	Front door, top gun blue, for H9A10-MC/MD cabinet enclosure	H9C10-TF
	Front door, top gun blue, for H9A15-MC/MD cabinet enclosure	H9C15-TF
Factory Integration	• Required	
	Factory Integration of systems and storage devices assembled and configured in cabinet enclosure in predefined locations	YS-ASCAA-AA
Ballast Kit	• Required only if one system is ordered for the H9A15 cabinet • Ballast is added to a cabinet at particular locations for specific configurations to meet safety regulations for installation, operation, and service; see Cabinet Configuration Charts.	
	Two 35 to 40 lb steel plates	H9C10-MC
Shelves Supported in M-Series Cabinets	• Optional	
	UltraSCSI single-ended RETMA rack, single-bus personality module, 180W power supply	BA36R-RC
	UltraSCSI single-ended RETMA rack, split-bus personality module, 180W power supply	BA36R-RD

Step 8 – Networking Adapters/Controllers

Step 8a – Networking Adapters/Controllers – Mandatory

- Select mandatory Ethernet adapter
- Adapters require a minimum of Tru64 UNIX V4.0F or OpenVMS V7.2-2
- Each adapter uses one PCI slot

NOTE: Ethernet adapter is not required if 3X-DEPVZ-AA or KZPCM is selected as SCSI adapter for StorageWorks shelf.

		Maximum # Supported			
		Tru64 UNIX	**OpenVMS**	**Linux**	
Ethernet 10/100	PCI (32-/64-bit, 33-/66-MHz) dual-port 10/100 Ethernet (UTP/RJ45s) NIC and Base Module. (One 3X-DE602-TA or 3X-DE602-FA optional add-on daughter card can be combined with this module.) Use BN25G, BN26M, BN24Q, or BN28Q twisted pair RJ45 cables.	4	4	-	3X-DE602-BB
Multi-function Module 10/100	PCI (32-bit, 33-MHz) multi-function (single-port 10/100 Ethernet UTP/RJ45, Ultra2 LVD SCSI, and 2D graphics) adapter **NOTE**: No support for multi-head graphics. OpenVMS V7.2-2 requires OpenVMS Tima Kit located at: - http://ftp.support.compaq.com/patches/.new/openvms.shtml **NOTE**: This Web site is available in English only. Tru64 UNIX V5.1 requires Patch Kit 3: - T64V51AS0003-20010413.tar Tru64 UNIX V4.0F with NHD2 – TruCluster V5.1 support restricted to non-shared buses Use BN25G, BN26M, BN24Q, or BN28Q twisted pair RJ45 cables.	1	1 Requires Slot 0	-	3X-DEPVZ-AA
	3X-DEPVZ-AA specific-use 3-metre LVD2 SCSI cable				BN37A-03

Step 8b – Networking Adapters/Controllers -- Optional

		Maximum # Supported			
		Tru64 UNIX	**OpenVMS**	**Linux**	
Ethernet 10/100	PCI (32-/64-bit, 33-/66-MHz) single-port 1000 Mbps (MMF/SC) NIC; no on-board Boot-ROM support. Use BN34A or BN34B cables.	4	4	-	DEGPA-SA
	PCI (32-/64-bit, 33-/66-MHz) single-port 10/100/1000 (UTP/RJ45) Gigabit NIC, copper; no on-board Boot-ROM support. **NOTE**: Requires minimum version of Tru64 UNIX V5.0A, Patch kit 2: - T64V50AAS0002-20001004.tar Requires minimum version of OpenVMS V7.2-2; OpenVMS V7.3 Requires Patch kit: - DEC-AXPVMS-VMS73_LAN-V0100—4.PCSI Use BN25G, BN26M, BN24Q, or BN28Q twisted pair RJ45 cables.	4	4	4	DEGPA-TA
	Dual-port 10/100 Ethernet (UTP/RJ45) add-on daughter card for use with the 3X-DE602-BB only. The combined 3X-DE602-BB and 3X-DE602-TA modules provide four 10/100 (UTP/RJ45s) ports in a single PCI slot option; allows for a maximum of 16 ports per system. **NOTE**: The 3X-DE602-TA cannot be used as standalone. OpenVMS V7.3 requires Tima Kit: - DEC-AXPVMS-VMS73_LAN-V0100—4.PCSI OpenVMS V7.2-2H1 requires OpenVMS Tima Kit located at: http://ftp.support.compaq.com/patches/.new/openvms.shtml **NOTE**: This Web site is available in English only. Use BN25G, BN26M, BN24Q, or BN28Q twisted pair RJ45 cables.	4	4	-	3X-DE602-TA

Step 8 – Networking Adapters/Controllers *(continued)*

Step 8b – Networking Adapters/Controllers – Optional *(continued)*

		Maximum # Supported			
		Tru64 UNIX	**OpenVMS**	**Linux**	
FDDI	Single-port 100Mbps (MMF/duplex-SC) add-on daughter card for use with 3X-DE602-BB. The combined 3X-DE602-BB 3X-DE602-FA provides two 10/100 (UTP/RJ45s) and one 100Mbps (MMF/SC) ports in a single PCI slot option. **NOTE**: The 3X-DE602-TA cannot be used standalone. Use BN34A or BN34B cables.	4 per system 1 per adapter	1 per adapter	-	3X-DE602-FA
	PCI (32-bit, 33-MHz) to FDDI SAS (MMF/duplex-SC) NIC. Use BN34A, BN34B, or BN34D cables.	4	4	-	3X-DEFPA-AC
	PCI (32-bit, 33-MHz) to FDDI DAS (MMF/duplex-SC) NIC. Use BN34A, BN34B, or BN34D cables.	4	4	-	3X-DEFPA-DC
	PCI (32-bit, 33-MHz) to FDDI DAS (UTP/RJ45s) NIC. Use BN25G, BN26M, BN24Q, or BN28Q twisted pair RJ45 cables.	4	4	-	3X-DEFPA-MC
	PCI (32-bit, 33-MHz) to FDDI SAS (UTP/RJ45) NIC. Use BN25G, BN26M, BN24Q, or BN28Q twisted pair RJ45 cables.	4	4	-	3X-DEFPA-UC
	FDDI - specific cable - Multimode fiber optic (MMF) 62.5/125um duplex cable with SC-to-MIC connectors. -xx = available lengths: (01, 03, 10) for 1, 3, 10 metres				BN34D-xx
ATM	PCI (32-bit, 33-MHz) to 155 Mbps ATM, copper NIC with RJ45 connector. Use BN25G-xx, or BN26M-xx cables.	6	6	-	3X-DAPBA-UA
	PCI (32-bit, 33-MHz) to 155 Mbps ATM fiber NIC with SC connector. Use BN34B-xx cable.	6	6	-	3X-DAPBA-FA
	PCI (32-bit, 33-MHz) to 622 Mbps ATM fiber NIC with SC connector. Use BN34B-xx cable.	4	-	-	3X-DAPCA-FA
Synchronous Communications (SYNC)	PCI (32-bit, 33-MHz) to dual-port intelligent synchronous communications NIC. Requires at least one (maximum two) 3X-BC34x synchronous cable listed below.	4	4	-	3X-PBXDD-AA
	PCI (32-bit, 33-MHz) to quad-port intelligent synchronous communications NIC. Requires at least one (max four) 3X-BCN34x synchronous cable listed below.	4	4	-	3X-PBXDD-AB
	Synchronous-Specific Cables				
	EIA-530 single-port cable				3X-BC34G-06
	V.24/EIA-232 single-port cable				3X-BC34L-06
	V.11/x.21 single-port cable				3X-BC34S-06
	V.35 single-port cable				3X-BC34T-06
Asynchronous Communications (ASYNC)	PCI (32-bit, 33-MHz) to quad-port Async Communications NIC with DB-25 octopus cable	4	4	-	PBXDA-BA
	PCI (32-bit, 33-MHz) to 8-port Async Communications NIC with DB-25 octopus cables	4	4	-	PBXDA-BB
	PCI (32-bit, 33-MHz) to 16-port Async Communications Controller and tabletop16-port distribution box with RJ45 connectors	2	2	-	PBXDA-AC
	PBXDA-AC Asynchronous Connector Adapters				
	RJ45 to DB-25 converter cable				CXI01-AC
	RJ45 to DEC MJ11 converter cable (8 pack)				CXI01-AF

Step 8 –Networking Adapters/Controllers *(continued)*

Step 8c – Multi-use Cables

		Maximum # Supported			
		Tru64 UNIX	**OpenVMS**	**Linux**	
Ethernet, FDDI, ATM	Multimode fiber optic (MMF) 62.5/125um duplex cable, with SC-to-ST connectors. –xx = available lengths: (2E, 4E, 01, 03, 10, 20, 30) for 2.4, 4.5, 1, 3, 10, 20, 30 metres				BN34A-xx
	Multimode fiber optic (MMF) 62.5/125um duplex cable, with SC-to-SC connectors. -xx = available lengths: (2E, 4E, 01, 03, 10, 20, 30) for 2.4, 4.5, 1, 3, 10, 20, 0 metres				BN34B-xx
	Category 5e (4-Unshielded Twisted Pairs / UTP) straight-through cable with RJ45-to-RJ45 connectors for system to switch, repeater, or hub connectivity. -xx = available lengths: (0B, 0E, 01, 03, 04, 07) for 0.2, 0.5, 1, 3, 4, 7 metres				BN25G-xx
	Category 5e (4-Twisted Pairs, Screened/ ScTP) straight-through cable with RJ45-to-RJ45 connectors for system to switch, repeater, or hub connectivity. -xx = available lengths: (0E, 01, 03, 04, 07) for 0.5, 1, 3, 4, 7 metres				BN26M-xx
	Category 5e (4-Unshielded Twisted Pairs / UTP) Xover cable with RJ45-to-RJ45 connectors for system to switch, repeater, or hub connectivity. -xx = available lengths: (0E, 01, 03, 04, 07) for 0.5, 1, 3, 4, 7 metres				BN24Q-xx
	Category 5e (4-Twisted Pairs, Screened / ScTP) Xover cable with RJ45-to-RJ45 connectors for system to switch, repeater, or hub connectivity. -xx = available lengths: (0E, 01, 03, 04, 07) for 0.5, 1, 3, 4, 7 metres				BN28Q-xx

Step 9 – MEMORY CHANNEL – Optional

NOTE: When using MEMORY CHANNEL, refer to the TruCluster QuickSpecs for configuration guidelines and restrictions:
http://www.compaq.com/products/quickspecs/Division/10657.html
The MEMORY CHANNEL controller, CCMAB-AA, must be revision C1 or later.

NOTE: This Web site is available in English only.

Tru64 UNIX Systems (V5.0A and later)

- Each system node in the cluster requires a TruCluster software license (QL-6BRAE-AA)

Tru64 UNIX Systems (V4.0F)

- Requires a minimum of Tru64 UNIX V4.0F with TruCluster V1.6 or later
- Each system node in the cluster requires a TruCluster Production Server (QB-3RLAE-AA) or TruCluster MEMORY CHANNEL software license (QB-4ZCAE-AA)
- TruCluster MEMORY CHANNEL license (QB-4ZCAG-AA), normally used for high performance technical computing applications, not required if systems include a TruCluster Production Server license (QB-3RLAE-AA)

OpenVMS Systems

- OpenVMS V7.2-2 or later and OpenVMS Cluster license (QL-MUZAE-AA) are required

Configuring Information

- Up to two PCI-to-System Area Network adapters (CCMAB-AA) are supported in a single system.
- Two-node clusters can be configured by ordering a CCMAB-AA for each node and one BN39B-04 or BN39B-10 cable; cable connects directly to CCMAB-AA in each node
- For a two-node cluster that will not be rebooted when adding additional members, order one CCMAB-AA adapter and one BN39B-04 or BN39B-10 cable for each node and one CCMHB-AA hub for the cluster
- Two-node clusters can also be configured by ordering two CCMAB-AA adapters for each node and two BN39B-04 or BN39B-10 cables; cables connect directly to CCMAB-AA in each node.
- For three or four node clusters, order one CCMAB-AA adapter and one BN39B-04 or BN39B-10 cable for each node, and one CCMHB-AA hub for the cluster If two CCMAB-AAs are configured in each system, a second CCMHB-AA is required.
- CCMHB-AA includes four CCMLB-AA line cards and supports up to four nodes; expansion up to eight system nodes can be achieved by adding up to four CCMLB-AA line cards.

Step 9 – MEMORY CHANNEL – Optional *(continued)*

Configuring Information *(continued)*

- If nodes must be separated by a distance longer than standard copper cables allow the CCMFB option converts the output of the standard CCMAB controller or CCMLB line card to single-mode fiber optic cable. The fiber optic connection may be up to 2,000 metres long between two CCMAB controllers connected in virtual hub mode, or 3,000 metres between a CCMAB controller and a CCMHB hub. (The connection from the CCMHB hub to a second system may also be 3,000 metres.) The CCMFB option requires a second PCI slot in the system from which it draws power only. It is normally connected to the corresponding CCMAB controller with the short BN39B-01 cable. The CCMFB is also used in the CCMHB hub where it occupies a slot normally used by the CCMLB line card, limiting expansion to four radial fiber optic connections.
- CCMHB-BA hub expansion box provides additional slots for up to eight fiber optic connections. Two standard length single-mode fiber optic cables are available (BN34R-10 and BN34R-31); however, users normally provide this fiber optic connection. Fiber optic connectivity is completely transparent to the systems using it and has no performance impact.

MEMORY CHANNEL Controller/System Area Network Hub	PCI-to-System Area Network Controller, maximum two	CCMAB-AA
	System Area Network Hub with four line cards; includes BN19P-2E power cord for Canada, Japan, and U.S. –for other regions, order appropriate power cord from the following list:	CCMHB-AA
	Hub expansion box with no line cards	CCMHB-BA
	Expansion line card for CCMHB hub	CCMLB-AA
	1-metre cable for CCMAB and CCMHB	BN39B-01
	4-metre cable for CCMAB and CCMHB	BN39B-04
	10-metre cable for CCMAB and CCMHB	BN39B-10
	Copper-to-single mode fiber optic converter	CCMFB-AA
	Rackmount kit (3U) for CCMHB (MEMORY CHANNEL Hub II); required for mounting in H9A1x cabinets.	3X-BA61R-MC
	Power cord for rackmount CCMHB hub	BN35S-02

MEMORY CHANNEL Power Cords	Australia, New Zealand (103541-011)	BN19H-2E
	Central Europe	BN19C-2E
	Denmark (103541-481)	BN19K-2E
	Egypt, India (103541-AR1)	BN19S-2E
	Ireland, United Kingdom	BN19A-2E
	Israel	BN18L-2E
	Italy (103541-461)	BN35M-02
	Japan, 2.5-metre, Dentori approved	3X-BN46F-02
	Switzerland (103541-511)	BN19E-2E

Step 10 – Storage Adapters/Controllers

NOTE: Refer to the following chart when configuring adapters, shelves, and disks.

AlphaServer ES40 Configuration Chart for Storage Adapters

Storage Adapters	Shelf	Disk Drives	Tru64 UNIX	OpenVMS	Linux
3X-KZPCA-AA	BA610-6D DS-SSL14-Rx DS-SL13R-xx	3R-A0xxx-AA 1-inch Universal 3R-A1xxx-AA 1-inch Universal 3R-A3xxx-AA 1-inch Universal	V4.0F or higher	V7.2-2 or higher	RedHat V6.2 SuSE V6.3 (Requires BA610)
3X-KZPEA-DB	BA610-6D DS-SSL14-Rx	3R-A0xxx-AA 1-inch Universal 3R-A1xxx-AA 1-inch Universal 3R-A3xxx-AA 1-inch Universal	V5.1A only	V7.2-2 or higher	-
DS-KGPSA-DA	External HSG80	3R-A0xxx-AA 1-inch Universal 3R-A1xxx-AA 1-inch Universal 3R-A3xxx-AA 1-inch Universal	V5.1	V7.2-2 or higher	-
3X-DEPVZ-AA	DS-SL13R-xx	3R-A1xxx-AA 1-inch Universal	V4.0F with NHD2 or higher	V7.2-2 or higher	-
KZPCM-DA	BA36R-xx	DS-RZ1ED-VW DS-RZ1FC-VW	V4.0F or higher	V7.2-2 or higher	-
3X-KZPBA-CC	BA36R-xx	DS-RZ1ED-VW DS-RZ1FC-VW	V4.0F or higher	V7.2-2 or higher	RedHat V6.2 SuSE V6.3
DS-SWLA4-PD	BA36R-xx	DS-RZ1ED-VW DS-RZ1FC-VW	-	-	RedHat V6.2 SuSE V6.3

NOTE: Ethernet adapter is not required if 3X-DEPVZ-AA or KZPCM-DA is selected as SCSI adapter for StorageWorks shelf.

External RAID Controllers

Controllers	Shelf	Disk Drives	Tru64 UNIX	OpenVMS	Linux
3X-KZPDC-BE/DF	DS-SL13R-xx	3R-A0xxx-AA 1-inch Universal 3R-A1xxx-AA 1-inch Universal 3R-A3xxx-AA 1-inch Universal	V5.1B/V5.1A EV68 only	V7.3-1	-
DS-KZPCC-AC/CE	BA36R-xx*	DS-RZ1ED-VW DS-RZ1FC-VW	V4.0F or higher	Not supported	-
KZPAC-AA/CA/CB	BA36R-xx*	DS-RZ1DD-VW	V4.0F or higher	V7.2-2 or higher	
FR-PCTAR-IB	BA36R-xx*	DS-RZ1ED-VW DS-RZ1FC-VW	-	-	RedHat V6.2 SuSE V6.3
FR-PCTAR-IC	BA36R-xx*	DS-RZ1ED-VW DS-RZ1FC-VW	-	-	RedHat V6.2 SuSE V6.3
SN-KZPBC-AA	BA36R-xx*	DS-RZ1ED-VW DS-RZ1FC-VW	-	-	RedHat V6.2 SuSE V6.3
DS-SWLA4-PD	BA36R-xx*	DS-RZ1ED-VW DS-RZ1FC-VW	-	-	RedHat V6.2 SuSE V6.3

NOTE: * = BA36R-xx shelves require DOC2 I/O module, DS-BA35X-FC; order DS-BA35X-FC as an independent option (will not be factory installed).

Internal RAID Controllers

Controllers	Shelf	Disk Drives	Tru64 UNIX	OpenVMS
3X-KZPDC-BE/DF	BA610-6D	3R-A0xxx-AA 1-inch Universal 3R-A1xxx-AA 1-inch Universal 3R-A3xxx-AA 1-inch Universal	V5.1B/V5.1A EV68 only	V7.3-1
DS-KZPCC-AC/CE (see NOTES)	BA610-6D (3)	3R-A0xxx-AA 1-inch Universal 3R-A1xxx-AA 1-inch Universal 3R-A3xxx-AA 1-inch Universal	EV6 V4.0F EV67 V5.1 (2) EV68 (1)	Not supported

NOTES:

(1) DS-KZPCC-AC/CE RAID controllers can be used with Universal shelves and drives in ES40 Pedestal and Rackmount configurations. Configuration rules are restricted to specific CPU speeds and OS versions:
- Tru64 UNIX V4.0F requires NHD3 and Patch Kit 4 (BL15) or later (for EV6, EV67, EV68 systems)
- Tru64 UNIX V5.1 requires Patch Kit 3 (BL17) and Early Release Patch C462.02 (for EV68 and specific EV67 systems)

(2) EV67 systems (54-30362-01) on V5.1 must be at Revision C01 or Revision D01
- Patch Kit 3 (BL17) is located at: T64V5117-C0046202-11060-Manual-ER-20010615.tar
- Patch C462.02 is located at: http://ftp1.support.compaq.com/public/unix/v5.1/
NOTE: This Web site is available in English only.
DS-KZPCC-AC/CE RAID controllers support standalone and cluster configurations
- No support as boot device in cluster configurations
- TruCluster V5.1 (restricted to non-shared buses only)

(3) Only BA610-6D cages (with Nile Cards Rev –0B) shipped after 1 October 2001 support internal RAID. Contact Customer Services to replace Nile Cards shipped in BA610-6D disk card cages prior to 1 October 2001 where internal RAID is required.

Step 10 – Storage Adapters/Controllers

		Maximum # Supported			
		Tru64 UNIX	OpenVMS	Linux	
SCSI	PCI 2-port PCI to Ultra3, 64-bit LVD SCSI adapter, uses one PCI slot; includes internal 68-pin and external 68-pin VHDCI connectors; requires 3X-BC56J-xx cable to connect adapter to Universal shelf; supports internal SDLT tape drives and external SDLT tape libraries; no shared SCSI support; support restricted to EV68 833-MHz systems only and Tru64 UNIX V5.1A as a minimum. See Step 12 for graphics restrictions. RequiresTru64 UNIX V5.1A as minimum revision. OpenVMS V7.2-2 requires Tima kit: - DEC-AXPVMS-V722_FIBRE_SCSI-V0100-4.PCSI OpenVMS V7.3 requires Tima kit: - DEC-AXPVMS-V73_FIBRE_SCSI-V0100-4.PCSI	4	4	-	3X-KZPEA-DB
	PCI 1-port Ultra2 (LVD) SCSI adapter, 32-bit, single-channel (uses one PCI slot); includes internal 68-pin and external 68-pin HD connectors; order BN38C-xx cable to connect adapter to Ultra3 shelf, or order VHDCI converter (BN38E-0B) for use with included cable; HSZxx RAID controllers not supported. OpenVMS V7.2-2 requires OpenVMS Tima Kit located at: http://ftp.support.compaq.com/patches/.new/openvms.shtml **NOTE**: This Web site is available in English only. Tru64 UNIX V4.0F requires Patch Kit2 BL13: - DUV40FAS0002-19991116.tar	6	6	6	3X-KZPCA-AA
	68-pin HD male-to-VHDCI male UltraSCSI cable; -xx = 02, 03, 05, 10, 20 metres				BN38C-xx
	PCI 1-port UltraSCSI differential adapter (uses one PCI slot); includes external 68-pin HD connector, requires BN38C-xx cable (2 to 220 metres) to connect adapter to differential UltraSCSI shelf or RAID controller	5	5	5	3X-KZPBA-CC
	68-pin HD male-to-VHDCI male UltraSCSI cable; -xx = 02, 03, 05, 10, 20 metres				BN38C-xx
Fibre Channel	PCI to 2-Gbit Fibre Channel adapter, 64-bit, single-channel (uses one PCI slot) (261329-B21) **NOTE**: When used in standalone or TruCluster environment (with Fibre Channel Switches, Step 11), a maximum of six adapters is supported. Arbitrated loop is not supported. Tru64 UNIX V5.1 requires Patch Kit: - T64V51B18AS0004-20011114.tar OpenVMS V7.2-2 requires Tima Kit: - DEC-AXPVMS-VMS722_FIBRE_SCSI-V0100 OpenVMS V7.3 requires Tima Kit: - DEC-AXPVMS-VMS73_FIBRE-SCSI-V0200	See Note	See Note	-	DS-KGPSA-DA
	PCI to 1-Gbit Fibre Channel adapter, 64-bit, single-channel (uses one PCI slot); direct attach supports a maximum of four adapters; TruCluster supports a maximum of two adapters	4	4	-	DS-KGPSA-CA
	See Fibre Channel cables – Step 11				
	PCI-to-Fibre Channel adapter, 64-bit single channel (uses one PCI slot); includes cable to HSG80 controller; requires Linux RedHat V6.2 and Linux SuSE V6.3; for details, refer to: http://www.compaq.com/products/storageworks/adapters/fchba-linux.html **NOTE**: This Web site is available in English only.	-	-	3	DS-SWLA4-PD

Step 10 – Storage Adapters/Controllers – Required if StorageWorks shelf is selected in Step 5 *(continued)*

		Maximum # Supported			
		Tru64 UNIX	**OpenVMS**	**Linux**	
Multi-function Module	PCI (32-bit, 33-MHz) multi-function (single-port 10/100 Ethernet UTP/RJ45, Ultra2 LVD SCSI, and 2D graphics) adapter. See Step 8.	1	1	-	3X-DEPVZ-AA
	PCI 2-port UltraSCSI single-ended adapter and 10/100 Mb Ethernet combo adapter (uses one PCI slot); includes internal 68-pin and 50-pin HD connectors and two external 68-pin VHDCI SCSI connectors, requires BN37A-xx cable to connect to single-ended UltraSCSI shelf	4	4	-	KZPCM-DA
	VHDCI male-to-VHDCI male UltraSCSI cable, xx = 02, 2E [2.5], 03, 05, 10, 20 metres				BN37A-xx
RAID	PCI 3-port PCI to Ultra2, 64-bit, LVD backplane RAID controller with 64-MB cache (uses one PCI slot); requires connection to DS-SSL14-Rx (maximum seven disks supported per channel) or to DS-SL13R-xx (maximum 14 disks with single channel); requires graphics adapter to run console utilities (SMOR).	8	-	-	DS-KZPCC-CE
	PCI 1-port PCI to Ultra2, 64-bit, LVD backplane RAID controller with 16-MB cache (uses one PCI slot); requires connection to DS-SSL14-Rx (maximum seven disks supported per channel) or to DS-SL13R-xx (maximum 14 disks with single channel); requires graphics adapter to run console utilities (SMOR).	8	-	-	DS-KZPCC-AC
	PCI 2-port PCI to Ultra3, 64-bit, 66 MHz, LVD backplane RAID controller with 128-MB cache (uses one PCI slot); requires connection to DS-SL13R-xx shelves or BA610-6D card cage. **NOTE**: Tru64 UNIX requires V5.1B and TruCluster V5.1B (non-shared buses only) with Initial Patch Kit: T64V51BV1AS0001-20021229.tar Tru64 UNIX requires V5.1A with Initial Patch Kit: T64V51AV21AS0004-20030206.tar **NOTE**: Supports EV68 systems only; no host-based volume shadowing or shared bus support under OpenVMS	6 per system 3 - PCI bus 0 4 - PCI bus 1	6 per system 3 - PCI bus 0 4 - PCI bus 1	-	3X-KZPDC-BE
	PCI 4-port PCI to Ultra3, 64-bit, 66 MHz, LVD backplane RAID controller with 256-MB cache (uses one PCI slot); requires connection to DS-SL13R-xx shelves or BA610-6D card cage. **NOTE**: Tru64 UNIX requires V5.1B and TruCluster V5.1B (non-shared buses only) with Initial Patch Kit: T64V51BV1AS0001-20021229.tar Tru64 UNIX requires V5.1A with Initial Patch Kit: T64V51AV21AS0004-20030206.tar **NOTE**: Supports EV68 systems only; no host-based volume shadowing or shared bus support under OpenVMS	6 per system 3 - PCI bus 0 4 - PCI bus 1	6 per system 3 - PCI bus 0 4 - PCI bus 1	-	3X-KZPDC-DF
	PCI 1-port UltraSCSI RAID controller with 4-MB cache memory (uses one PCI slot), includes RAID Array 230/Plus Subsystem software and documentation kit; includes VHDCI female connector; tape drives not supported; only 9.1-GB disk drives supported, requires BN37A-xx cable (0.3 to 20 metres) to connect to single-ended UltraSCSI shelf	4	4	-	KZPAC-AA
	PCI 3-port UltraSCSI RAID controller with 4-MB cache memory (uses one PCI slot), includes RAID Array 230/Plus Subsystem Software and documentation kit; tape drives not supported; only 9.1-GB disk drives supported; SCSI cable required for each active port; requires BN37X-xx cable (0.3 to 20 metres) to connect to single-ended UltraSCSI shelf, and BN31K-0E for external third port connection	4	4	-	KZPAC-CA
	Same as KZPAC-CA with 8-MB cache memory	4	4	-	KZPAC-CB
	Cache battery backup for KZPAC controller				KZPSC-UB

Options

Step 10 – Storage Adapters/Controllers – Required if StorageWorks shelf is selected in Step 5 *(continued)*

		Maximum # Supported			
		Tru64 UNIX	**OpenVMS**	**Linux**	
RAID *(continued)*	VHDCI male-to-VHDCI male UltraSCSI cable; -xx = 02, 2E [2.5], 03, 05, 10, 20, 25 metres **NOTE**: Manufacturing may substitute BN37A-02 cable for specific cabinet configurations.				BN37A-xx
	SCSI cable/bulkhead assembly kit, supports one third-port connection from KZPAC-CA/CB, allows external connection of one third port				BN31K-0E
	SCSI cable/bulkhead assembly kit, supports two third-port connections from KZPAC-CA/CB, allows external connection of two third ports				KZPAC-SB
RAID (Linux)	PCI 1-port Ultra SCSI RAID controller with 4-MB cache; supports disk drives only and external support only in BA356 StorageWorks shelves; requires RedHat V6.2, SuSE V6.3	-	-	4	SN-KZPBC-AA
	PCI 3-port Ultra SCSI RAID controller with 32-MB cache; supports disk drives only and external support only in BA356 StorageWorks shelves; requires RedHat V6.2, SuSE V6.3	-	-	4	FR-PCTAR-IB
	PCI 3-port Ultra SCSI RAID controller with 64-MB cache; supports disk drives only and external support only in BA356 StorageWorks shelves; requires RedHat V6.2, SuSE V6.3	-	-	4	FR-PCTAR-IC
CI	PCI CI adapter for OpenVMS systems only; requires two PCI slots and CI cable for each adapter	-	2	-	CIPCA-BA
	CI cable				BNCIA-xx
DSSI	PCI DSSI controller for OpenVMS systems only; requires HSDxx controller to connect directly to StorageWorks shelf; requires BC29S-xx cable	-	4	-	KFPSA-AA
	6-foot DSSI cable for connection to HSD10 installed in BA36R pedestal shelf				BC29S-06
	9-foot DSSI cable for connection to HSD10 installed in BA36R cabinet shelf				BC29S-09

Options

Step 11 – Storage Devices – Optional

Step 11a – Tape Devices

Tape Drives

- System includes embedded 1.44-MB diskette drive
- System includes embedded 5.25-inch half-height 600-MB 16X IDE CD-ROM drive
- Removable media slots provide support for up to two 5.25-inch half-height devices, or one 5.25-inch full-height removable media device; select up to two AIT or DAT devices or one DLT/SDLT tape device
- For maximum performance, tape libraries must be configured with Fast Wide Differential (FWD) controllers for tape backup
- For more information on tape drives, see http://www.compaq.com/products/StorageWorks/sitemap.html#tapedrives
  NOTE: This Web site is available in English only.

AIT Tape Drives (Internal)

- The following AIT tape drives are supported with 3X-KZPCA-AA and 3X-KZPEA-DB adapters.

AIT 5.25-inch half-height 35/70-GB 8-mm Wide UltraSCSI tape drive, top gun blue; requires SCSI cable (3X-BN46M-01)	3X-SZ35X-LB
AIT 5.25-inch half-height 35/70-GB 8-mm LVD UltraSCSI tape drive, carbon black; requires SCSI cable (3X-BN46M-01)	3R-A2392-AA
AIT 5.25-inch half-height 50/100-GB 8-mm Ultra2 (LVD) SCSI tape drive, top gun blue; requires SCSI cable (3X-BN46M-01)	3X-SZ50X-LB
AIT 5.25-inch half-height 50/100-GB 8-mm Ultra2 (LVD) SCSI tape drive; carbon black; requires SCSI cable (3X-BN46M-01) (157766-B22)	3R-A3753-AA
AIT 5.25-inch half-height 100/200-GB 8-mm Ultra3 SCSI tape drive; supported with 3X-KZPEA-DB, 3X-KZPCA-AA, or 3X-DEPVZ-AA LVD adapters, carbon black, requires SCSI cable (3X-BN46M-01)	3R-A3623-AA
1-metre Ultra2 68-pin LVD cable with two connectors, multimode terminator and two wide-to-narrow adapters (for connection of 50-pin narrow devices)	3X-BN46M-01

AIT Tabletop Tape Drives

AIT 35/70-GB 8-mm LVD tabletop tape drive, carbon black, North America	216885-001
Same as above, International	216885-B31
Same as above, Japan	216885-291
AIT 50/100-GB 8-mm SCSI tabletop tape drive with 120V North American power cord	157767-002
Same as above, International	157767-B32
Same as above, Japan	157767-292
AIT 100/200-GB 8-mm Ultra3 SCSI tabletop tape drive; supported with 3X-KZPEA-DB, 3X-KZPCA-AA, or 3X-DEPVZ-AA LVD adapters, North America, carbon black	249160-001
Same as above, International	249160-B31

AIT Hot-plug Tape Drives

The following AIT hot-plug tape drives use two Universal (BA610) slots:

AIT 35/70-GB hot-plug LVD Universal tape drive, uses two slots in BA610-6D or 43xxx shelves	3R-A2396-AA
AIT 50/100-GB hot-plug LVD Universal tape drive, uses two slots in BA610-6D or 43xxx shelves	3R-A2779-AA
AIT 100/200-GB hot-plug LVD Universal tape drive, uses two slots in BA610-6D or 43xxx shelves; supported with 3X-KZPEA-DB, 3X-KZPCA-AA, or 3X-DEPVZ-AA LVD adapters	3R-A3621-AA

AIT Autoloaders

AIT 35-GB tabletop autoloader, 8 cartridge, U.S.	292355-001
Same as above, International	292355-B31
AIT 35-GB rackmount autoloader, 8 cartridge, U.S.	280349-001
Same as above, International	280349-B31
AIT Rail kit for autoloader	284930-001

Options

Step 11 – Storage Devices – Optional *(continued)*

Step 11a – Tape Devices *(continued)*

AIT Tape Libraries	SSL2020 AIT tabletop library with one AIT 50-GB drive and 20 slots, LVD	175195-B21
	SSL2020 AIT tabletop library with two AIT 50-GB drive and 20 slots, LVD	175195-B22
	SSL2020 AIT rackmount library with one AIT 50-GB drive and 20 slots, LVD (Universal shelves)	175196-B21
	SSL2020 AIT rackmount library with two AIT 50-GB drives and 20 slots, LVD (Universal shelves)	175196-B22
DAT Tape Drives (Internal)	• Select up to two DAT devices • The following DAT tape drives are supported with 3X-KZPCA-AA and 3X-KZPEA-DB adapters.	
	DAT 12/24-GB 4-mm 5.25-inch half-height SCSI tape drive, top gun blue; requires SCSI cable (3X-BN46M-01) **(Linux-supported option)**	TLZ10-LB
	DAT 20/40-GB 4-mm 5.25-inch half-height Ultra2 (LVD) SCSI tape drive, top gun blue; requires SCSI cable (3X-BN46M-01)	3X-SD20X-LB
	DAT 20/40-GB 4-mm 5.25-inch half-height Ultra2 (LVD) SCSI tape drive, carbon black; requires SCSI cable (3X-BN46M-01) (157769-B22)	3R-A3752-AA
	1-metre Ultra2 68-pin LVD cable with two connectors, multimode terminator and two wide-to-narrow adapters (for connection of 50-pin narrow devices)	3X-BN46M-01
	DAT 12/24-GB 4-mm narrow SCSI tape drive in StorageWorks carrier	DS-TLZ10-VA
DAT Tabletop Tape Drives	DAT 20/40-GB 4-mm Wide Ultra2 (LVD) tabletop SCSI tape drive with 120V North American power cord, carbon black	157770-002
	Same as above, International	157770-B32
	Same as above, Japan	157770-292
DAT Hot-plug Tape Drive	DAT 20/40-GB DDS4 hot-plug LVD Universal tape drive, uses two slots in BA610-6D or 43xxx shelves **(Linux-supported option)**	3R-A2780-AA
DAT Autoloaders	DAT 20/40-GB auto loader external; requires VHDCI BN38A-0B adapter and BN23G-xx SCSI cable, North America	166505-001
	Same as above, International	166505-B31
	Same as above, Japan	166505-291
SDLT Tape Drives (Internal)	• Select one SDLT tape device • The following SDLT tape drives are supported with 3X-KZPCA-AA and 3X-KZPEA-DB adapters.	
	SDLT 110/220-GB 3U/5U tape drive **(Linux-supported option)**	192106-B25
	SDLT 160/320-GB 3U/5U tape drive, carbon black	257319-B21
SDLT Tabletop Tape Drives	SDLT tabletop 110/220-GB external tape drive, carbon black – TruCluster support restricted to non-shared buses only – U.S.	192103-002
	Same as above – International	192103-B32
	Same as above – Japan	192103-292
	SDLT tabletop 160/320-GB external tape drive, carbon black– U.S.	257319-001
	Same as above – International	257319-B31
	Same as above – Japan	257319-291

Step 11 – Storage Devices – Optional *(continued)*

Step 11a – Tape Devices *(continued)*

DLT/SDLT Tape Libraries	Rackmount kit for H9Axx M-Series cabinets – required for mounting MSL5000 series in M-Series cabinets	254795-001
	MSL5026DLX, DLT tabletop library with one 40/80-GB DLT tape drive, LVD	231821-B21
	MSL5026DLX, DLT tabletop library with two 40/80-GB DLT tape drives, LVD	231821-B22
	MSL5026DLX or MSL5026SL, DLT/SDLT rackmount library, 0 drives – requires rackmount kit (254795-001)	231979-B21
	MSL5026DLX, DLT rackmount library with one 40/80-GB DLT tape drive, LVD – requires rackmount kit (254795-001)	231891-B21
	MSL5026DLX, DLT rackmount library with two 40/80-GB DLT tape drives, LVD – requires rackmount kit (254795-001)	231891-B22
	MSL5026S2, SDLT2 tabletop library with one 160/320-GB SDLT tape drive, LVD	293-473-B21
	MSL5026S2, SDLT2 tabletop library with two 160/320-GB SDLT tape drives, LVD	293473-B22
	MSL5026S2 SDLT rackmount library, 0 drives, LVD – requires rackmount kit (254795-001)	293472-B21
	MSL5026S2, SDLT2 rackmount library with one 160/320-GB SDLT tape drive, LVD	293472-B22
	MSL5026S2, SDLT2 rackmount library with two 160/320-GB SDLT tape drive, LVD	293472-B23
	MSL5026S2, SDLT2 rackmount library with one 160/320-GB SDLT tape drive with Fibre Channel, LVD	293472-B24
	MSL5026S2, SDLT2 rackmount library with two 160/320-GB SDLT tape drive with Fibre Channel, LVD	293472-B25
	MSL5052SL SDLT tabletop library with two 110/220-GB drives, LVD	249490-B21
	MSL5052SL SDLT rackmount library, 0 drives, LVD – requires rackmount kit (254795-001)	255102-B21
	MSL5052SL SDLT rackmount library with two 110/220-GB drives, LVD – requires rackmount kit (254795-001)	249491-B21
	MSL5052SL SDLT 110/220-GB drive field upgrade, LVD	231823-B22
	MSL5052S2, SDLT2 tabletop library with two 160/320-GB SDLT tape drives, LVD, graphite	293476-B21
	MSL5052S2, SDLT2 rackmount library with two 160/320-GB SDLT tape drive, LVD	293474-B21
	MSL5052S2, SDLT2 rackmount library with two 160/320-GB SDLT tape drive with Fibre Channel, LVD	293474-B24
	ESL9198SL SDLT tape library with four 110/220-GB SDLT tape drives, 198 slots	234618-B21
	ESL9198SL SDLT tape library with eight 110/220-GB SDLT tape drives, 198 slots	234618-B22
	ESL9322S2 SDLT2 tape library, two 160/320GB SDLT tape drives, 222 slots	293409-B22
	ESL9322S2 SDLT2 tape library, eight 160/320GB SDLT tape drives, 222 slots	293409-B28
	ESL9322S2 SDLT2 tape library, two 160/320GB SDLT tape drives, 322 slots	2934010-B22
	ESL9322S2 SDLT2 tape library, eight 160/320GB SDLT tape drives, 322 slots	2934010-B28

Options

Step 11 – Storage Devices – Optional *(continued)*

Step 11a – Tape Devices *(continued)*

DLT/SDLT Tape Libraries *(continued)*	ESL9326SL SDLT tape library with six 110/220-GB SDLT tape drives, LVD	234615-B21
	ESL9326SL SDLT tape library with eight 110/220-GB SDLT tape drives, LVD	234615-B22
	ESL9326SL SDLT tape library with 16 110/220-GB SDLT tape drives, LVD	234615-B26
	ESL9595S2 SDLT2 tape library, two 160/320-GB SDLT tape drives, 400 slots	293411-B22
	ESL9595S2 SDLT2 tape library, 16 160/320-GB SDLT tape drives, 400 slots	293411-B28
	ESL9595S2 SDLT2 tape library, two 160/320-GB SDLT tape drives, 500 slots	293412-B22
	ESL9595S2 SDLT2 tape library, 16 160/320-GB SDLT tape drives, 500 slots	293412-B28
	ESL9595S2 SDLT2 tape library, two 160/320-GB SDLT tape drives, 595 slots	293413-B22
	ESL9595S2 SDLT2 tape library, 16 160/320-GB SDLT tape drives, 595 slots	293413-B28
	ESL9595SL SDLT tape library, 0 drives, 400 slots	274672-B21
	ESL9595SL SDLT tape library, 2 drives, 400 slots	274672-B22
	ESL9595SL SDLT tape library, 16 drives, 400 slots	274672-B28
	ESL9595SL SDLT tape library, 0 drives, 500 slots	281627-B21
	ESL9595SL SDLT tape library, 2 drives, 500 slots	281627-B22
	ESL9595SL SDLT tape library, 16 drives, 500 slots	281627-B28
	ESL9595SL SDLT tape library, 0 drives, 595 slots	281628-B21
	ESL9595SL SDLT tape library, 2 drives, 595 slots	281628-B22
	ESL9595SL SDLT tape library, 16 drives, 595 slots	281628-B28
3U Rackmount Tape Drive Enclosure	**NOTE:** The following options are supported with 3X-KZPCA-AA or 3X-KZPEA-DB LVD adapters.	
	3U LVD Rackmount Tape Drive Enclosure for use in H9Axx M-Series Cabinets, carbon black, 0 drives	274338-B21
	Rackmount Kit for H9Axx M-Series Cabinets, carbon black – required for mounting 3U Rackmount Tape Drive Enclosure in M-Series cabinet	3R-A3804-AA
	NOTE: The 3U Rackmount Tape Enclosure supports up to four internal half-height removable devices, or up to two full-height devices; select up to four AIT or DAT devices or two DLT/SDLT devices with 3U Rackmount Tape Enclosure (274338-B21) or choose one of the preconfigured configurations listed below.	
	AIT 35/70-GB 3U tape drive, carbon black	216884-B21
	AIT 50/100-GB 3U tape drive, carbon black (157766-B22)	3R-A3753-AA
	DAT 20/40-GB 3U tape drive, carbon black (157769-B22)	3R-A3752-AA
	DLT8000 40/80-GB tape drive	146196-B22
	SDLT 110/220-GB tape drive	192106-B25
	SDLT 160/320-GB tape drive, carbon black	257319-B21
	Preconfigured Configurations	
	AIT 50-GB 3U rackmount kit, carbon black	274333-B21
	DLT 40/80-GB, 3U rackmount kit, carbon black	274332-B21
	DLT 40/80-GB, dual-drive, 3U rackmount kit, carbon black	274335-B21
	SDLT 110/220-GB, 3U rackmount kit, carbon black	274331-B21
	SDLT 110/220-GB, dual-drive, 3U rackmount kit, carbon black	274334-B21

Options

Step 11 – Storage Devices – Optional *(continued)*

Step 11a – Tape Devices *(continued)*

5U Rackmount Tape Drive Enclosure	5U LVD Rackmount Tape Drive Enclosure for use in H9Axx M-Series Cabinets, 0 drives, carbon black	274339-B21
	Rackmount Kit for H9Axx M-Series Cabinets, carbon black – required for mounting 5U Rackmount Tape Drive Enclosure in M-Series Cabinet	254795-001
	NOTE: The 5U Rackmount Tape Enclosure supports four full-height removable devices; select up to four DLT or SDLT devices with 5U Rackmount Tape Enclosure (274339-B21) or choose one of the preconfigured configurations listed below.	
	DLT8000 40/80-GB tape drive	146196-B22
	SDLT 110/220-GB tape drive	192106-B25
	SDLT 160/320-GB tape drive, carbon black	257319-B21
	Preconfigured configurations	
	SDLT 110/220-GB Tape Array III, 5U rackmount kit, carbon black	274336-B21
	DLT 40/80-GB Tape Array III, 5U rackmount kit, carbon black	274337-B21
	DLT Tape Array III Model 0 enclosure, U.S.	168047-001
	Same as above, International	168047-B31
	Same as above, Japan	168047-291

Step 11b – Network Storage Routers

Network Storage Routers	**NOTE**: The following Network Storage Routers (Tru64 UNIX) are supported with MSL5000 and ESL9000 tape libraries	
	NSR M2402 Two Fibre Channel x 4 HVD FC to SCSI Data Router, Tru64 UNIX and OpenVMS (262654-B21)	3R-A3741-AA
	NSR M2402 Two Fibre Channel x 4 LVD FC to SCSI Data Router, Tru64 UNIX and OpenVMS (262653-B21)	3R-A3740-AA
	NSR e1200 One Fibre Channel x 2 LVD FC to SCSI Data Router, Tru64 UNIX and OpenVMS, carbon black (262672-B21)	3R-A3746-AA
	NSR e2400 Two Fibre Channel x 4 LVD FC to SCSI Data Router with card cage, Tru64 UNIX and OpenVMS, carbon black (262665-B21)	3R-A3935-AA
	NSR e2400 Two Fibre Channel x 4 LVD FC to SCSI Data Router without card cage, Tru64 UNIX and OpenVMS, carbon black (262664-B21)	3R-A3745-AA
	NSR N1200 One Fibre Channel x 2 LVD FC to SCSI Data Router, Tru64 UNIX and OpenVMS, supports tape drives and tape libraries (280823-B21)	3R-A3747-AA

Step 11 – Storage Devices – Optional *(continued)*

Step 11c – External Storage Solutions/Controllers

External Storage Solutions/Controllers	Enterprise Virtual Array Model 2C6D-B 60-Hz, includes 41U graphite storage cabinet, M3220 controller assembly with dual HSV110 controllers, six M5214 dual-redundant FC loop 14-bay drive enclosures, four 12-port FC loop switches; requires DS-KGPSA-xx (283198-B21)	DS-SV110-JA
	Enterprise Virtual Array Model 2C6D-B 50-Hz, includes 41U graphite storage cabinet, M3220 controller assembly with dual HSV110 controllers, six M5214 dual-redundant FC loop 14-bay drive enclosures, four 12-port FC loop switches; requires DS-KGPSA-xx (283198-B22)	DS-SV110-JB
	Enterprise Virtual Array Model 2C12D-B 60-Hz, includes 41U graphite storage cabinet, M3220 controller assembly with dual HSV110 controllers, twelve M5214 dual-redundant FC loop 14-bay drive enclosures, four 12-port FC loop switches; requires DS-KGPSA-xx (283199-B21)	DS-SV110-KA
	Enterprise Virtual Array Model 2C12D-B 50-Hz, includes 41U graphite storage cabinet, M3220 controller assembly with dual HSV110 controllers, twelve M5214 dual-redundant FC loop 14-bay drive enclosures, four 12-port FC loop switches; requires DS-KGPSA-xx (283199-B22)	DS-SV110-KB
	Enterprise Virtual Array Model 8C8D 60-Hz, includes 41U graphite storage cabinet, four M3220 controller assembly with eight HSV110 controllers, eight M5214 dual FC loop 14-bay drive enclosures; requires DS-KGPSA-xx (283263-B21)	DS-SV110-LA
	Enterprise Virtual Array Model 8C8D 50-Hz, includes 41U graphite storage cabinet, four M3220 controller assembly, with eight HSV110 controllers, eight M5214 dual FC loop 14-bay drive enclosures; requires DS-KGPSA-xx (283263-B22)	DS-SV110-LB
	Enterprise Virtual Array Model 0C6D-B 60-Hz, includes 41U graphite storage cabinet, six M5214 dual-redundant FC loop 14-bay drive enclosures, twelve 16.4-feet/5-metre interconnect cables (to 2C12D-B); requires DS-KGPSA-xx (283264-B21)	DS-SV110-MA
	Enterprise Virtual Array Model 0C6D-B 50-Hz, includes 41U graphite storage cabinet, six M5214 dual-redundant FC loop 14-bay drive enclosures, twelve 16.4-feet/5-metre interconnect cables (to 2C12D-B); requires DS-KGPSA-xx (283264-B22)	DS-SV110-MB
	Enterprise Virtual Array Model 0C12D-B 60-Hz, includes 41U graphite storage cabinet, 12 M5214 dual-redundant FC loop 14-bay drive enclosures, 24 16.4-feet/5-metre interconnect cables (to two 2C12D-Bs); requires DS-KGPSA-xx (283265-B21)	DS-SV110-NA
	Enterprise Virtual Array Model 0C12D-B 50-Hz, includes 41U graphite storage cabinet, 12 M5214 dual-redundant FC loop 14-bay drive enclosures, 24 16.4-feet/5-metre interconnect cables (to two 2C12D-Bs); requires DS-KGPSA-xx (283265-B22)	DS-SV110-NB
SAN Solutions Kits	Tru64 UNIX SAN Solutions Kit for Enterprise Virtual Array V2.0 (250193-B22) **NOTE**: V5.1 requires Patch Kit 3: T64V51B19AS0005-20020411.tar V5.1A requires Patch Kit 3: T64V51AB03AS0003-20020827.tar	QB-6RPAB-SB
	OpenVMS SAN Solutions Kit for Enterprise Virtual Array V2.0 (250194-B22) **NOTE**: V7.2-2 requires Tima Kit:DEC-AXPVMS-VMS722_FIBRE_SCSI-V0200 V7.3 requires Tima Kit:DEC-AXPVMS-VMS73_FIBRE_scsi-V0300	QB-6RPAC-SB

Options

Step 11 – Storage Devices – Optional *(continued)*

Step 11c – External Storage Solutions/Controllers *(continued)*

Fibre Channel Controller	Fibre Channel Controller (HSG80), includes 256-MB cache; requires following firmware: 8.6-4F ACS FW (222318-B22, QB-6BUAA-SD), one per controller 8.6-4S ACS FW (222364-B22 QB-6ENAA-SC), one per controller 8.6-4P ACS FW (222316-B22, QB-6CAAA-SD), one per controller Requires Tru64 UNIX software: 222320-B23, QB-65RAB-SE, one per controller Requires OpenVMS software: 222321-B22, QB-65RAC-SD, one per controller	DS-HSG80-BK
	Additional 256-MB cache for HSG80 (380674-B21)	DS-HSDIM-AC
	Single cache battery, one per HSG80 controller (135823-B21)	DS-SE2CS-CB
	Model 2200 controller shelf for HSG80 controller (135820-B21)	DS-SE2ZS-C8

StorageWorks Disk Array Family

NOTE: The HP StorageWorks Disk Array Family, specifically the XP128 and XP1024, are supported on AlphaServer ES40 systems. For product and ordering information, refer to the following Web pages:
http://www.hp.com/products1/storage/products/disk_arrays/highend/xp1024/index.html
http://www.hp.com/products1/storage/products/disk_arrays/highend/xp128/index.html

The following part numbers have been assigned for reference purposes only:

3R-A4417-AA	A7876A	XP128 Disk Array Control Frame
3R-A4418-AA	A7906A	XP1024 Disk Array Control Frame

RA3000 RAID Array

RAID Array 3000 (HSZ22) storage array is supported on AlphaServer ES40 systems (Tru64 UNIX V4.0F, V5.0A or higher and OpenVMS V7.x); supports KZPBA-CB adapter, minimum console V5.8

- For ordering information see:
  http://www.compaq.com/products/StorageWorks/raidstorage/RA3000ped_config.html
  NOTE: This Web site is available in English only.

Step 11d – Fibre Channel Options

The following hubs, data routers, switches, and cables are used in Fibre Channel configurations using the DS-KGPSA-xx adapter.

Fibre Channel Disk Drives	36-GB 10K rpm dual-port 2-Gb/sec FC-AL 1-inch (25.4 mm) drive (238590-B21)	3R-A3239-AA
	72-GB 10K rpm dual-port 2-Gb/sec FC-AL 1-inch (25.4 mm) drive (238921-B21)	3R-A3260-AA
	36-GB 15K rpm dual-port 2-Gb/sec FC-AL 1-inch (25.4 mm) drive (236205-B21)	3R-A3210-AA
Fibre Channel Hubs	Fibre Channel 7-port Storage Hub, International (Tru64 UNIX only) (234453-B31)	DS-SWXHB-17
	Fibre Channel 7-port Storage Hub, Japan (Tru64 UNIX only) (234453-291)	DS-SWXHB-J7
Fibre Channel Data Routers	1 Fibre Channel x 2 HVD data router (163082-B21)	3R-A2673-AA
	1 Fibre Channel x 2 LVD data router (163083-B21)	3R-A2774-AA
	2 x 4 LVD Fiber Channel to SCSI Network Storage Router (262653-B21)	3R-A3740-AA
	2 x 4 HVD Fiber Channel to SCSI Network Storage Router (262654-B21)	3R-A3741-AA
Fibre Channel Switches	Fibre Channel 2-Gb 8-port SAN switch (258707-B21)	DS-DSGGD-AC
	Fibre Channel 2-Gb 16-port SAN switch (283056-B21)	DS-DSGGD-AD
	Fibre Channel SAN 2-Gb switch – 16-port (287055-B2) - Requires Tru64 UNIX V5.1A Patch Kit: T64V51AB01AS0001-20020116.tar - Requires Tru64 UNIX V5.1 Patch Kit: T64V51AS0003-20010521.tar	DS-DSGGD-BA
	Fibre Channel 2-Gb 64-port Core Switch (254508-B21)	DS-DSGGE-AB

Step 11 – Storage Devices – Optional *(continued)*

Step 11d – Fibre Channel Options *(continued)*

McData 64-port Fibre Channel SAN Director Class Switches	SAN Director 64 (1 GB) 32 ports, base model	DS-DMGGD-AA
	SAN Director 2 Gb, 64 ports (286809-B21)	DS-DMGGD-BA
	SAN Edge Switch 2 Gb, 32 ports (286810-B21)	DS-DMGGE-BC
	SAN Edge Switch 2-Gb, 16 ports (286811-B21)	DS-DMGGE-BB
	NOTE: Connection for, or between, 1-Gb and/or 2-Gb SAN switches requires different cables. Refer to the Switches, Hubs, and Interconnects QuickSpecs at: http://www.compaq.com/products/quickspecs/North_America/10490.html **NOTE**: This Web site is available in English only.	
Fibre Channel Cables	**NOTE**: The following LC-SC connector cables support connectivity between 1-Gb and 2-Gb devices.	
	2-metre LC-SC multi-mode Fibre Channel cable (221691-B21)	3R-A2976-AA
	5-metre LC-SC multi-mode Fibre Channel cable (221691-B22)	3R-A2977-AA
	15-metre LC-SC multi-mode Fibre Channel cable (221691-B23)	3R-A2978-AA
	30-metre LC-SC multi-mode Fibre Channel cable (221691-B26)	3R-A3458-AA
	50-metre LC-SC multi-mode Fibre Channel cable (221691-B27)	3R-A3459-AA
	NOTE: The following LC-LC connector cables support connectivity between 2-Gb and 2-Gb devices.	
	2-metre LC-LC multi-mode Fibre Channel cable (221692-B21)	3R-A2979-AA

Step 12 – Graphics Adapters – Optional

- RAID Configuration Utility is accessible via console port; optional graphics capability is available
- Select graphics adapter, monitor, and country-specific keyboard for Tru64 UNIX and OpenVMS systems if required

		Maximum # Supported			
		Tru64 UNIX	**OpenVMS**	**Linux**	
2D Graphics	3Dlabs Oxygen VX1 32-MB PCI 2D graphics accelerator **NOTE**: Only one 3X-KZPEA-DB adapter is allowed with SN-PBXGF-AB adapter.	1	1	1	SN-PBXGF-AB
	PCI (32-bit, 33-MHz) multi-function (single-port 10/100 Ethernet UTP/RJ45, Ultra2 LVD SCSI, and 2D graphics) adapter **NOTE**: No support for multi-head graphics. OpenVMS V7.2-2 requires OpenVMS Tima Kit located at: - http://ftp.support.compaq.com/patches/.new/openvms.shtml Tru64 UNIX V5.1 requires Patch Kit 3: - T64V51AS0003-20010413.tar Tru64 UNIX V4.0F with NHD2 – TruCluster V5.1 support restricted to non-shared buses Use BN25G, BN26M, BN24Q, or BN28Q twisted pair RJ45 cables.	1	1 Requires Slot 0	-	3X-DEPVZ-AA
3D Graphics	PowerStorm 300 3D multi-head graphics accelerator with 15-MB frame buffer memory and 16-MB texture memory **NOTE**: Graphics controllers must be the same type (PowerStorm); no mixing. **NOTE**: If using SN-PBXGD-AD graphics adapter on the same PCI bus with the 3X-KZPEA-DB adapter, the SN-PBXGD-AD must be at minimum revision C06.	8	4	-	SN-PBXGD-AD
	PowerStorm 350 3D multi-head graphics accelerator with 30-MB frame buffer memory and 32-MB texture memory **NOTE**: If using SN-PBXGD-AE graphics adapter on the same PCI bus with the 3X-KZPEA-DB adapter, the SN-PBXGD-AE must be at minimum revision B05 or A03.	8	4	-	SN-PBXGD-AE

NOTE: PowerStorm 300 and PowerStorm 350 adapters require the following:
OpenVMS V7.2-2 (minimum version required) requires OpenVMS Tima Kits located at:
http://ftp.support.compaq.com/patches/.new/openvms.shtml
Tru64 UNIX V4.0F (minimum version required) requires Patch Kit 1 with Environmental Patch
PowerStorm 300 and PowerStorm 350 adapters can be combined, provided the system maximum is not exceeded.

Options

Step 13 – Monitors – Optional

- Graphics monitors other than those listed can be used if compatible with SVGA graphics ordered with system
- A video cable, 6-foot/1.8-metre length, is included with all variants of monitors.
- Video extension cable required if monitor is located more than 1 metre from server
- Monitors will ship with, but not be integrated with systems.

Carbon/Silver Monitors	V7550 17-inch (16-inch viewable image size) flat-faced shadow mask colour monitor, two-tone (carbon/silver), 0.25mm dot pitch, VGA to 1024 x 768 @85 Hz, MPRII/TCO 99/Energy Star Compliant, Northern Hemisphere with NA power cord, VGA cable	3R-A4002-AA
	Same as above, with Euro power cord	3R-A4201-AA
	Same as above, APD, no power cord	3R-A4202-AA
	Same as above, with PRC power cord, CCIB	3R-A4446-AA
	Same as above, Southern Hemisphere, with Australia/New Zealand power cord	3R-A4203-AA
	P930 19-inch (18-inch viewable image size) auto-scanning colour monitor, Diamondtron NF, 0.24-mm aperture grille pitch, VGA to 1600 x 1200 @85 Hz, MPRII/TCO 99/Energy Star Compliant, Northern Hemisphere with NA power cord, VGA cable,	3R-A4215-AA
	Same as above, with Euro power cord	3R-A4391-AA
	Same as above, Taiwan, with NA power cord	3R-A4392-AA
	Same as above, with PRC power cord, CCIB	3R-A4394-AA
	Same as above, Southern Hemisphere, 0.25 to 0.27 mm aperture grille pitch, with Australia/New Zealand power cord	3R-A4393-AA
	P1130 21-inch (19.8-inch viewable image size) FD Trinitron auto-scanning colour monitor, Diamondtron NF, 0.24-mm aperture grille pitch, VGA to 1792 x 1344 @85Hz, dual video input, USB Hub, MPRII/TCO 99/Energy Star Compliant, Northern Hemisphere with NA power cord, VGA cable	3R-A4216-AA
	Same as above, with Euro power cord	3R-A4396-AA
	Same as above, Taiwan, no power cord	3R-A4397-AA
	Same as above, with PRC power cord, CCIB	3R-A4400-AA
	Same as above, Southern Hemisphere, with Australia/New Zealand power cord	3R-A4398-AA
Carbon/Silver Flat Panel Monitors	TFT1825, 18-inch (18-inch viewable image size) TFT flat panel monitor, 0.28mm pixel pitch, 1600 x 1200 @60Hz, multi-mode support, MPRII/TCO99/Energy Star compliant, one VGA, one DVI-I input connector. NA power cord, VGA and DVI-I cables	3R-A4292-AA
	TFT1520, 15-inch (15-inch viewable image size) TFT flat panel monitor, 0.297 mm pixel pitch, 1024 x 768 @75 Hz, multi-mode support, MPRII/TCO99/Energy Star compliant, two video input connectors (one VGA and one DVI-I), NA power cord, VGA and DVI-I cables	3R-A4249-AA
Video Extension Cable	6-foot/1.8-metre video extension cable – optional	BN39C-02
Monitor Power Cords	North America, 120V, 75-inch	BN26J-1K
	Australia, New Zealand, 2.5-metre (103541-011)	BN19H-2E
	Central Europe, 2.5-metre	BN19C-2E
	Denmark, 2.5-metre (103541-481)	BN19K-2E
	Egypt, India, South Africa, 2.5-metre (103541-AR1)	BN19S-2E
	Israel, 2.5-metre	BN18L-2E
	Italy, 2.5-metre (103541-461)	BN35M-02
	Japan, 2.5-metre, Dentori approved	3X-BN46F-02
	Switzerland, 2.5-metre (103541-511)	BN19E-2E
	UK, Ireland, 2.5-metre	BN19A-2E

Step 14 – Keyboards, Mouse, Power Cords, Documentation

Step 14a – Keyboards – Optional

- Select country-specific keyboard and mouse only if required.
- All keyboards listed may not be available in all geographies.
- Select an opal OpenVMS keyboard for use with VT5xx text terminals.

	Opal	Carbon	
Keyboard/Language	**OpenVMS**	**Tru64 UNIX and Linux**	**OpenVMS**
U.S. keyboard	LK461-A2	3R-LKQ48-BA	3X-LK462-A2
Arabic keyboard	-	3R-LKQ48-BR	-
Belgian keyboard	LK461-AB	3R-LKQ48-AB	3X-LK462-AB
BHCSY keyboard	-	3R-LKQ48-AX	-
Canadian/English keyboard	LK461-AQ	-	3X-LK462-AQ
Canadian/French keyboard	LK461-AC	3R-LKQ48-AC	3X-LK462-AC
Cyrillic keyboard (Russian)	LK461-BT	3R-LKQ48-BT	3X-LK462-BT
Czech keyboard	LK461-BV	3R-LKQ48-BV	3X-LK462-BV
Danish keyboard	LK461-AD	3R-LKQ48-AD	3X-LK462-AD
Dutch keyboard	LK461-AH	3R-LKQ48-AH	3X-LK462-AH
Finnish keyboard	LK461-AF	3R-LKQ48-AF	3X-LK462-AF
French keyboard	LK461-AP	3R-LKQ48-AP	3X-LK462-AP
German keyboard	LK461-AG	3R-LKQ48-AG	3X-LK462-AG
Greek keyboard	LK461-BH	3R-LKQ48-BH	3X-LK462-BH
Hebrew keyboard	LK461-AT	3R-LKQ48-AT	3X-LK462-AT
Hungarian keyboard	LK461-BQ	3R-LKQ48-BQ	3X-LK462-BQ
International keyboard	-	3R-LKQ48-BA	-
Italian keyboard	LK461-AI	3R-LKQ48-AI	3X-LK462-AI
Japanese keyboard	-	3R-LKQ48-AJ	-
Korean keyboard	-	3R-LKQ48-BK	-
Latin-American keyboard	-	3R-LKQ48-AR	-
Norwegian keyboard	LK461-AN	3R-LKQ48-AN	3X-LK462-AN
Polish keyboard	LK461-BP	3R-LKQ48-BP	3X-LK462-BP
Portuguese keyboard	LK461-AV	3R-LKQ48-AV	3X-LK462-AV
Romanian keyboard	LK461-BL	-	3X-LK462-BL
Simplified Chinese keyboard	-	3R-LKQ48-CV	-
Slovak keyboard	LK461-CZ	3R-LKQ48-CZ	3X-LK462-CZ
Spanish keyboard	LK461-AS	3R-LKQ48-AS	3X-LK462-AS
Swedish keyboard	LK461-AM	3R-LKQ48-AM	3X-LK462-AM
Swiss/French keyboard	LK461-AK	3R-LKQ48-AK	3X-LK462-AK
Swiss/German keyboard	LK461-AL	-	3X-LK462-AL
Traditional Chinese keyboard	-	3R-LKQ48-BI	-
Thai keyboard	-	3R-LKQ48-CB	-
Turkish Q keyboard	LK461-BU	3R-LKQ48-BU	3X-LK462-BU
Turkish/F keyboard	LK461-BW	-	3X-LK462-BW
UK keyboard	-	3R-LKQ48-AE	-
Yugoslavian keyboard	LK461-BY	-	3X-LK462-BY

Options

Step 14 – Keyboards, Mouse, Power Cords, Documentation *(continued)*

Step 14b – **Mouse** – Optional

Keyboard or Mouse Extension Cable	6-foot/1.8-metre keyboard or mouse extension cable; to extend both keyboard and mouse order two cables	3X-BC34A-06
Mouse	3-button mouse – carbon	3R-A3480-AA

Step 14c – Power Cords

Tower Power Cords	• Tower enclosure ordered in North America includes 120V power cord; selection of country-specific power cord is mandatory for all non-North American systems. • Each additional power supply ordered with a system installed in tower enclosure requires additional power cord	
Tower and Pedestal Power Cords	• Pedestal systems ordered in North America include two 120V power cords; selection of two country-specific power cords is mandatory for all non-North American systems.	
	North America 120V, 75-inch	BN26J-1K
	Australia, New Zealand, 2.5-metre (103541-011)	BN19H-2E
	Central Europe, 2.5-metre	BN19C-2E
	Denmark, 2.5-metre (103541-481)	BN19K-2E
	Egypt, India, South Africa, 2.5-metre (103541-AR1)	BN19S-2E
	Israel, 2.5-metre	BN18L-2E
	Italy, 2.5-metre (103541-461)	BN35M-02
	Japan, 2.5-metre	3X-BN46F-02
	Switzerland, 2.5-metre (103541-511)	BN19E-2E
	UK, Ireland, 2.5-metre	BN19A-2E

Step 14d – Documentation

	Additional AlphaServer ES40 System Information Kit (print and CD), Owners Guide, User Interface Guide, and Release Notes	QA-6E88A-G8

Options

Step 15– Console Terminal – Optional

- Any terminal can be used as a console device
- Third-party console devices require an EIA-232 25-pin DSUB connector

VT510 video terminal; requires keyboard, H8575-x adapter, and BC16E-x cable	VT510-xx
Console cable, female connector (25-pin passive adapter)	H8575-A
Console cable, male connector (adapter with EOS, ESD, 25 POS D-SUB)	H8575-D

Step 16 – Upgrade Kit – Optional

Upgrades ES40 Model 1 with six I/O slots and support for four memory options to ES40 Model 2 with 10 I/O slots and support for eight memory options	3X-KFPPA-AA

Step 17 – Software – Required selection of media and documentation for first system on site

- Software Processor Code = E

Tru64 UNIX

- AlphaServer ES40 Tru64 UNIX systems include Unlimited User license, Server Extension license, Internet Express, and Secure Web Server
- AlphaStation ES40 Tru64 UNIX systems include preinstalled software, 2-user Base license and Open3D traditional license

When using Tru64 UNIX V5.0A or later

Tru64 UNIX media and online documentation on CD-ROM	QA-6ADAA-H8
Tru64 UNIX full hard copy documentation	QA-6ADAA-GZ
StorageWorks Software Package, with licenses for Logical Storage Manager and AdvFS Utilities	QB-5RXAE-AA
TruCluster Server License	QL-6BRAE-AA
Advanced Server for Tru64 UNIX, 25 client concurrent use license	QL-5U29M-3D
Advanced Server for Tru64 UNIX, 50 client concurrent use license	QL-5U29M-3E
Advanced Server for Tru64 UNIX, 100 client concurrent use license	QL-5U29M-3F
Advanced Server for Tru64 UNIX, 250 client concurrent use license	QL-5U29M-3G
Advanced Server for Tru64 UNIX, 500 client concurrent use license	QL-5U29M-3H
Layered products media and documentation for Tru64 UNIX on CD-ROM	QA-054AA-H8
DECnet/OSI extended function license for Tru64 UNIX	QL-MTKAE-AA
DECnet/OSI end-system license for Tru64 UNIX	QL-MTJAE-AA
Open3D for Tru64 UNIX on CD-ROM, includes graphics drivers	QA-OAFAA-H8

When using Tru64 UNIX V4.0F

Tru64 UNIX media and online documentation on CD-ROM	QA-MT4AA-H8
Tru64 UNIX full hard copy documentation	QA-MT4AA-GZ
StorageWorks Software Package, with licenses for Logical Storage Manager and AdvFS Utilities	QB-5RXAE-AA
TruCluster Available Server License	QL-05SAE-AA
TruCluster Production Server License	QB-3RLAE-AA
Tru64 UNIX Driver for MEMORY CHANNEL license	QB-4ZCAE-AA
Advanced Server for Tru64 UNIX, 25 client concurrent use license	QL-5U29M-3D
Advanced Server for Tru64 UNIX, 50 client concurrent use license	QL-5U29M-3E
Advanced Server for Tru64 UNIX, 100 client concurrent use license	QL-5U29M-3F
Advanced Server for Tru64 UNIX, 250 client concurrent use license	QL-5U29M-3G
Advanced Server for Tru64 UNIX, 500 client concurrent use license	QL-5U29M-3H
Layered products media and documentation for Tru64 UNIX on CD-ROM	QA-054AA-H8
DECnet/OSI end-system license for Tru64 UNIX	QL-MTJAE-AA
DECnet/OSI extended function license for Tru64 UNIX	QL-MTKAE-AA
Open3D for Tru64 UNIX on CD-ROM, includes graphics drivers	QA-OAFAA-H8

Step 17 – **Software** – Required selection of media and documentation for first system on site *(continued)*

OpenVMS

- AlphaServer ES40 OpenVMS systems include Base license with System Manager license and Enterprise Integration Server License Package for OpenVMS Revision V3.1
- AlphaStation ES40 OpenVMS systems include pre-installed software, Base license, Concurrent Use 1-user license, NAS 150 Client license, MMS RT license and Open3D traditional license
- Enterprise Integration Package includes licenses for TCP/IP Services for OpenVMS, DECwindows Motif for OpenVMS Alpha, DECprint Supervisor for OpenVMS Alpha Plus, DECprint Supervisor for OpenVMS Open, DECnet-Plus for OpenVMS Alpha End System, Archive/Backup System for OpenVMS Management Tools, Archive/Backup Agent for *Windows NT*™, OpenVMS Disk Services for Windows NT, Office Server for OpenVMS, PATHWORKS 32, PATHWORKS V6 for OpenVMS – Advanced Server, and DIGITAL Office Server Client Access License
- OpenVMS Concurrent Use licenses provide the right to interactively use the operating system by the specified number of concurrent users on a designated OpenVMS system. OpenVMS Concurrent Use licenses can be moved from one system to another at user discretion and can be shared in a mixed OpenVMS VAX and OpenVMS Alpha cluster.
- OpenVMS Traditional Unlimited Use license is system specific and can only be used on one system at a time. It cannot be shared between systems or in an OpenVMS VAX or OpenVMS Alpha Cluster.

Concurrent Use 1-user license	QL-MT3AA-3B
Concurrent Use 2-user license	QL-MT3AA-3C
Concurrent Use 4-user license	QL-MT3AA-3D
Concurrent Use 8-user license	QL-MT3AA-3E
Concurrent Use 16-user license	QL-MT3AA-3F
Concurrent Use 32-user license	QL-MT3AA-3G
Concurrent Use 64-user license	QL-MT3AA-3H
Concurrent Use 128-user license	QL-MT3AA-3J
Concurrent Use 256-user license	QL-MT3AA-3K
Traditional unlimited user license	QL-MT2AE-AA
OpenVMS V7.2-2 media and online documentation on CD-ROM	QA-MT1AR-H8
OpenVMS V7.3 media and online documentation on CD-ROM	QA-MT1AT-H8
OpenVMS media and documentation on CD-ROM	QA-MT1AA-H8
OpenVMS full hard copy documentation	QA-001AA-GZ
Layered products media and documentation for OpenVMS on CD-ROM, includes Enterprise Integration Server for OpenVMS media and documentation.	QA-03XAA-H8
DECnet extended function license for OpenVMS	QL-MTGAE-AA
DECnet end-system to extended function upgrade license for OpenVMS	QL-MTHAE-AA
OpenVMS Cluster license for Alpha systems	QL-MUZAE-AA
OpenVMS Volume Shadowing license	QL-2A1AE-AA

Options

Step 18 – Hardware and Software Support Services for Tru64 UNIX and OpenVMS

- Select one of the optional *CarePaq*™ Priority Service Packages described below that best support the customer's operational requirements for system availability.

CarePaq Priority Services	• CarePaq Priority Services are available for AlphaServer systems running Tru64 UNIX or OpenVMS operating systems. Priority Services are designed for the growing number of customers who need support beyond the basic warranty. It offers five services packages − Priority, Priority 24, Priority Silver, Priority Gold, and Priority Executive with coverage for both principal server systems and SSPs (Subsequent System Packages) – that meet a full range of customer support requirements.
Program Features – Principal Server	
Priority	• 9 x 5 HW/SW support • 4-hour response on-site hardware support • 2-hour response for Bronze software support • License Subscription for HP O/S software and embedded L/P (i.e., EIS for OpenVMS, unlimited users, and server extensions for Tru64 UNIX • Consolidated Software Media Update Distribution for OpenVMS or Tru64 UNIX and their layered products. (Some Layered products are not included on Consolidated Software Media Update Distribution and can be ordered separately.)
Priority 24	• 24 x 7 HW/SW support • Named HW engineer • 4-hour response on-site hardware support • 2-hour response for Bronze software support • License Subscription for HP O/S software and embedded L/P (i.e., EIS for OpenVMS, unlimited users and server extensions for Tru64 UNIX • Consolidated Software Media Update Distribution for OpenVMS or Tru64 UNIX and their layered products. (Some Layered products are not included on Consolidated Software Media Update Distribution and can be ordered separately.)
Priority Silver	• 24 x 7 HW Support. Named Engineer, 4-hour response • 24 x 7 Silver SW Support – Named Account Rep, 1-hour response Monday – Friday, 8AM-5PM local time; 2-hour response remaining hours • License Subscription for HP O/S software and embedded L/P (i.e., EIS for OpenVMS, unlimited users, and server extensions for Tru64 UNIX • Consolidated Software Media Update Distribution for OpenVMS or Tru64 UNIX and their layered products. (Some Layered products are not included on Consolidated Software Media Update Distribution and can be ordered separately.) • Technical newsletter and SW activity review • Proactive Patch Notification • One System Healthcheck per year
Priority Gold	• 24 x 7 HW support with Named Engineer, 4-hour response for on-site support • 24 x 7 Gold SW support – Named Account Rep • 30-minute callback (critical); 1-hour callback (non-critical) • License Subscription for HP O/S software and embedded L/P (i.e., EIS for OpenVMS, unlimited users, and server extensions for Tru64 UNIX • Consolidated Software Media Update Distribution for OpenVMS or Tru64 UNIX and their layered products. (Some Layered products are not included on Consolidated Software Media Update Distribution and can be ordered separately.) • Technical newsletter, SW activity review and 10 hrs Upgrade impact planning • Proactive Revision Management • Two System Healthchecks per year • Mandatory pre-qualification required

Options

Step 18– Hardware and Software Support Services for Tru64 UNIX and OpenVMS *(continued)*

Program Features – Principal Server *(continued)*

Priority Gold Executive	• 24 x 7 HW support with Named Engineer, 2-hour response for on-site support • 24 x 7 Gold SW support – Named Account Rep • 30-minute callback (critical); 1-hour callback (non-critical) • License Subscription for HP O/S software and embedded L/P (i.e., EIS for OpenVMS, unlimited users, and server extensions for Tru64 UNIX. • Consolidated Software Media Update Distribution for OpenVMS or Tru64 UNIX and their layered products. (Some Layered products are not included on Consolidated Software Media Update Distribution and can be ordered separately.) • Technical newsletter, SW activity review and 10 hrs Upgrade impact planning • Proactive Revision Management • Two System Healthchecks per year • Customer site must be within 25 miles of a HP service location • Mandatory pre-qualification required

Program Features – Additional Services

SSPs (Subsequent System Packages)	• For Priority, Priority 24, Priority Silver, Priority Gold, and Priority Gold Executive • HW Support at same level as corresponding package for Principal server • License Subscription: HP O/S (where applicable) • Telephone support through Principal server covered by full support package
Installation	• Preinstallation review • Unpacking of equipment • Assemble and test • Basic product usage info • No software installation added
Installation & Startup HP O/S	• Preinstallation review • Unpacking of equipment • Assemble and test • Basic product usage info • Install operating systems • Product configuration • Print & network access • Orientation

Options

Step 18 – Hardware and Software Support Services for Tru64 UNIX and OpenVMS *(continued)*

Model/CarePaq Priority Service	Principal Server 1 year	Principal Server 3 years	Subsequent Systems 1 year	Subsequent Systems 3 years
AlphaServer ES40 Model 1 Pedestal				
Priority	FP-F01AA-12	FP-F01AA-36	FP-F21AA-12	FP-F21AA-36
Priority 24	FP-F02AA-12	FP-F02AA-36	FP-F22AA-12	FP-F22AA-36
Priority Silver	FP-F04AA-12	FP-F04AA-36	FP-F24AA-12	FP-F24AA-36
Priority Gold	FP-F08AA-12	FP-F08AA-36	FP-F28AA-12	FP-F28AA-36
Priority Gold Exec.	FP-F09AA-12	FP-F09AA-36	FP-F29AA-12	FP-F29AA-36
Installation	FP-FINST-AA	FP-FINST-AA	FP-FINST-AA	FP-FINST-AA
Installation & Startup	FP-FSTAR-AA	FP-FSTAR-AA	FP-FSTAR-AA	FP-FSTAR-AA
AlphaServer ES40 Model 2 Pedestal				
Priority	FP-F01BA-12	FP-F01BA-36	FP-F21BA-12	FP-F21BA-36
Priority 24	FP-F02BA-12	FP-F02BA-36	FP-F22BA-12	FP-F22BA-36
Priority Silver	FP-F04BA-12	FP-F04BA-36	FP-F24BA-12	FP-F24BA-36
Priority Gold	FP-F08BA-12	FP-F08BA-36	FP-F28BA-12	FP-F28BA-36
Priority Gold Exec.	FP-F09BA-12	FP-F09BA-36	FP-F29BA-12	FP-F29BA-36
Installation	FP-FINST-BA	FP-FINST-BA	FP-FINST-BA	FP-FINST-BA
Installation & Startup	FP-FSTAR-BA	FP-FSTAR-BA	FP-FSTAR-BA	FP-FSTAR-BA
AlphaServer ES40 Model 1 Tower/Drawer				
Priority	FP-F01CA-12	FP-F01CA-36	FP-F21CA-12	FP-F21CA-36
Priority 24	FP-F02CA-12	FP-F02CA-36	FP-F22CA-12	FP-F22CA-36
Priority Silver	FP-F04CA-12	FP-F04CA-36	FP-F24CA-12	FP-F24CA-36
Priority Gold	FP-F08CA-12	FP-F08CA-36	FP-F28CA-12	FP-F28CA-36
Priority Gold Exec.	FP-F09CA-12	FP-F09CA-36	FP-F29CA-12	FP-F29CA-36
Installation	FP-FINST-CA	FP-FINST-CA	FP-FINST-CA	FP-FINST-CA
Installation & Startup	FP-FSTAR-CA	FP-FSTAR-CA	FP-FSTAR-CA	FP-FSTAR-CA
AlphaServer ES40 Model 2 Tower/Drawer				
Priority	FP-F01DA-12	FP-F01DA-36	FP-F21DA-12	FP-F21DA-36
Priority 24	FP-F02DA-12	FP-F02DA-36	FP-F22DA-12	FP-F22DA-36
Priority Silver	FP-F04DA-12	FP-F04DA-36	FP-F24DA-12	FP-F24DA-36
Priority Gold	FP-F08DA-12	FP-F08DA-36	FP-F28DA-12	FP-F28DA-36
Priority Gold Exec.	FP-F09DA-12	FP-F09DA-36	FP-F29DA-12	FP-F29DA-36
Installation	FP-FINST-DA	FP-FINST-DA	FP-FINST-DA	FP-FINST-DA
Installation & Startup	FP-FSTAR-DA	FP-FSTAR-DA	FP-FSTAR-DA	FP-FSTAR-DA

NOTES:

- AlphaServer ES40 systems include three years hardware warranty with 5 x 9, on-site Next Business Day response.
- New HP hardware options internal to the AlphaServer enclosure receive the same warranty or service level as purchased with the server.
- External storage devices/cabinets carry their own level of warranty and should be quoted separately for uplifted warranty services (CarePaq Priority Service).
- In addition to the CarePaq Priority Services, uplifted warranty Supplemental Services are available for separate hardware and software support. For more information on Hardware and Software Supplemental Services and other HP service options available for AlphaServers, consult a Sales Account Manager or visit

  English: http://www.compaq.ca/english/service/services.htm
  French: http://www.compaq.ca/Francais/service/servicesf.htm

NOTE: Certain restrictions and exclusions may apply. For details, consult the Product Information Centre at 1-888-882-6672.

Step 19 – Hardware Supplemental Support Services for Linux – Optional

Hardware - Americas and Asia Pacific Only

- Systems include three-year hardware warranty, onsite with 5 x 9, 24-hour response time
- Options ordered as part of initial system sale take on warranty of the enclosure
- Options added after initial system sale take on warranty of the enclosure until enclosure warranty ends
- All unique ES40 options have a minimum of one-year Return to Hewlett-Packard Warranty
- Select optional Hardware Supplemental Support Services if required

Supplemental Service for ES40 Tower System	Model 1	Model 2
3-year, 5 x 9, 4-hour response time	FM-4T4HR-36	FM-4Q4HR-36
5-year, 5 x 9, 4-hour response time	FM-4T4HR-60	FM-4Q4HR-60
3-year, 7 x 24, 4-hour response time	FM-4T724-36	FM-4Q724-36
5-year, 7 x 24, 4-hour response time	FM-4T724-60	FM-4Q724-60
5-year, 5 x 9, next day, on-site	FM-4TXHW-60	FM-4QXHW-60

Supplemental Service for ES40 Pedestal System	Model 1	Model 2
3-year, 5 x 9, 4-hour response time	FM-4F4HR-36	FM-4G4HR-36
5-year, 5 x 9, 4-hour response time	FM-4F4HR-60	FM-4G4HR-60
3-year, 7 x 24, 4-hour response time	FM-4F724-36	FM-4G724-36
5-year, 7 x 24, 4-hour response time	FM-4F724-60	FM-4G724-60
5-year, 5 X 9, next day, on-site	FM-4FXHW-60	FM-4GXHW-60

Installation Services	Model 1	Model 2
Hardware product installation for ES40 Tower System	FM-4TINS-IN	FM-4QINS-IN
Hardware product installation for ES40 Pedestal System	FM-4FINS-IN	FM-4GINS-IN

Add-on memory installation for ES40	FM-64MEM-IN
Add-on SMP CPU installation for ES40	FM-64CPU-IN

NOTE: Add-on installation part numbers should be used when options are added to existing systems.

Hardware - Europe Only

Europe does not offer specific part numbers for Hardware Supplemental Support Services. Prices are quoted based on worldwide service reference pricing. Contact MCS Sales in your country for information on Hardware Supplemental Support Services.

Technical Specifications

Tower Configuration	**Dimensions** (H x W x D)	20 x 15.25 x 31 in/50.8 x 38.7 x 78.7 cm		
	Shipping Dimensions	32.2 x 24 x 40 in/82.48 x 60.2 x 101.6 cm		
	Weight	Typical Configuration	144.3 lb/65.6 kg	
		Maximum Configuration	212.8 lb/96.7 kg	
	Shipping Weight	Typical Configuration	172 lb/78 kg	
		Maximum Configuration	242 lb/110 kg	
	Clearances		**Operating**	**Service**
		Front	29.5 in/75 cm	29.5 in/75 cm
		Rear	6 in/15 cm	29.5 in/75 cm
		Left Side	None	29.5 in/75 cm
		Right Side	None	None

Pedestal Configuration	**Dimensions** (H x W x D)	30.8 x 20 x 31.75 in/78.2 x 50.8 x 80.6 cm		
	Shipping Dimensions	42.4 x 39.5 x 23.9 in/107.7 x 100.3 x 60.7 cm		
	Weight	Typical Configuration	280 lb/127 kg	
		Maximum Configuration	350 lb/159 kg	
	Shipping Weight	Typical Configuration	328 lb/149 kg	
		Maximum Configuration	407 lb/185 kg	
	Clearances		**Operating**	**Service**
		Front	29.5 in/75 cm	29.5 in/75 cm
		Rear	6 in/15 cm	29.5 in/75 cm
		Left Side	None	None
		Right Side	None	29.5 in/75 cm

Rackmount System	**Dimensions** (H x W x D)	13.87 x 17.6 x 30.1 in/35.2 x 44.7 x 76.5 cm (fits 14 in [8U] standard RETMA cabinet)	
	Shipping Dimensions	28.8 x 24 x 40 in/73.2 x 60.7 x 101.6 cm	
	Weight	When lifting:	
		Nominal	110 lb/50 kg
		Maximum	167.2 lb/76 kg
		Total added to cabinet (brackets, slides, cables):	
		Nominal	130 lb/59 kg
		Maximum	202.4 lb/92 kg
	Shipping Weight	Nominal	158 lb/72 kg
		Maximum	233 lb/106 kg
	Clearances	Operating	Service
		See specific cabinet requirements	Minimum 4 ft/121.9 cm, 30 in/76.3 cm withdrawal on rails

Technical Specifications

Cabinet Configuration		**H9A10 M-Series**	**H9A15 M-Series**
	Dimensions (H x W x D) (Depth includes rear door extender)	67 x 23.6 x 41.5 in/ 170 x 60 x 105.4 cm	79 x 23.6 x 41.5 in/ 200 x 60 x 105.4 cm
	Shipping Dimensions	73 x 36 x 48 in/ 185.5 x 91.5 x 122 cm	85 x 36 x 48 in/ 216 x 91.5 x 122 cm
	Weight	Configuration dependent	Configuration dependent
	Shipping Weight	Nominal: 946 lb/430 kg	Nominal: 1,056 lb/550 kg
		Maximum: 1,375 lb/625 kg	Maximum: 1,408 lb/640 kg)

System Unit	**ENVIRONMENTAL**			
	Temperature	Operating (Tower, Pedestal, Rackmount)	50° to 95° F/10° to 35° C	
		Non-operating	–40° to 151° F/–40° to 66° C	
		Storage (60 days)	–40° to 151° F/–40° to 66° C	
		Rate of change	20° F/hr/11° C/hr	
		NOTE: Maximum operating temperature at sea level; reduce by 1.8°F (1°C) for each 2,000 ft (600 m) above sea level.		
	Humidity	Operating	20% to 80%	
		Non-operating	20% to 80%	
		Storage (60 days)	10% to 95%	
		Rate of change	20% hr	
	Maximum Wet Bulb Temperature	Operating	82° F/28° C	
		Storage (60 days)	115° F/46° C	
	Maximum Dew Point Temperature	Operating	36° F/2° C	
	Heat Dissipation		**Nominal**	**Maximum**
		Tower and Rack	900 W, 3,074 BTU/hr	1300 W, 4,440 BTU/hr
		Pedestal	1480 W, 5,054 BTU/hr	2400 W. 8,196 BTU/hr
		H9A10/H9A15 Cabinets	Configuration dependent	4800 W, 16,392 BTU/hr
	Air Flow and Quality	Intake location	Front	
		Exhaust location	Rear Tower, Pedestal, Rack; Rear/top H9A10/H9A15	
		Particle size	N/A	
		Concentration	N/A	
	Altitude (unpressurized)	Operating	10,000 ft/3,048 m	
		Non-operating	40,000 ft/12,192 m	
		NOTE: Higher altitudes are possible if maximum operating temperature is reduced (see Temperature); other restrictions may apply such as maximum permissible altitude for hard drives.		

System Unit *(continued)*

ACOUSTICS (Declared values per ISO 9296 and ISO 7779)

Acoustics		L_{WAd3}**B**	L_{nAm5}**dBA** (bystander position)
	Idle	6.6	48
	Operating	6.6	48

NOTE: Current values for specific configurations are available, 1 B = 10 dBA.

ELECTRICAL (Power supplies are universal, PFC, auto ranging, 100/240 VAC)

Nominal Voltage (VAC)	100	120	200 to 240		
Voltage Range (VAC) (temporary condition)	90 to 100	110 to 128	180 to 250		
Power Source Phase	Single	Single	Single		
Nominal Frequency (Hz)	50/60	50/60	50/60		
Frequency Range (Hz)	49 to 51/59 to 61	49 to 51/59 to 61	49 to 51/59 to 61		
RMS Current	Tower and Rackmount	Single power cord	11.0 A	8.5 A	5.0 A
		Multiple power cords	6.5 A	5.3 A	3.0 A
		Maximum VA	1,300	1,270	1,250
	Pedestal	Each power cord	12.0 A	10.5 A	6.0 A
		Maximum VA	1,960	1,900	1,880
	M-Series Cabinet (configuration dependent)	Nominal voltage (VAC)	100	120	220 to 240
		Each power cord	24 A	24 A	16 A
Power Cords	Tower	Up to 3 (75 in/190 cm)	IEC 320 C13 to NEMA 5-15 (North America) or IEC 320 C13 to country-specific		
	Pedestal	2 (75 in/190 cm)	120V non-removable NEMA 5-15 (N. America) or 200-240V IEC 320 C13 to country-specific		
	Rackmount	3 (14 ft 10 in/52 cm)	IEC 320 C13 to NEMA 5-15 (North America) or IEC 320 C13 to IEC 320 C14 (other countries)		
	Cabinet	2 (10 ft 10 in/30 cm)	120V non-removable NEMA L5-30P or 200-240V non-removable IEC 309		

System Unit *(continued)*	**ELECTRICAL** (Power supplies are universal, PFC, auto ranging, 100/240 VAC) *(continued)*		
	Regulatory	Agency Approvals	UL: Listed to UL1950 (third edition)
			CSA: Certified to CAN/CSA-C22.2 No. 950-M95
			TUV: EN 60950/A4: 1997 VDE 0805 GS marked
			FCC: Part 15.B Class A
			CE: EN55022, EN50082
			VCCI Class II ITE
			BCIQ: CISPR22, CNS13438
			C-Tick: CISPR22, AS/NZS 3548
		Reviewed to	AS/NZ 3260:1993 Australian/New Zealand Standard
			EN 60950/A4: 1997 European Norm
			IEC 950 (second edition, third amend)

© 2003 Hewlett-Packard Canada Company

Hewlett-Packard, the Hewlett-Packard logo, AlphaServer, AlphaStation, OpenVMS, StorageWorks, CarePaq, Tru64, and TruCluster are trademarks of Hewlett-Packard Company in the U.S. and/or other countries. UNIX is a registered trademark or trademark of The Open Group in the U.S. and/or other countries. All other product names mentioned herein may be trademarks of their respective companies.

Hewlett-Packard shall not be liable for technical or editorial errors or omissions contained herein. The information is provided ″as is″ without warranty of any kind and is subject to change without notice. The warranties for Hewlett-Packard products are set forth in the express limited warranty statements accompanying such products. Nothing herein should be construed as constituting an additional warranty.