AlphaServer DS20 Tru64 UNIX and OpenVMS
V1.5—1 April 1999

Systems and Options Catalog

Product Description

The Compaq AlphaServer DS20 is a 500MHz EV6 based Alpha microprocessor server with 4 MB level two cache. The AlphaServer DS20 supports two CPUs, and is available in Pedestal configurations with a choice of Tru64 UNIX and OpenVMS operating systems. Pedestal configurations can be installed in M-series cabinet enclosures. The AlphaServer DS20 system's high-reliability features include: hot swap disk drives, redundant power supplies, ECC memory, heat sensor, fan failure sensor, and power supply sensor. Integrated on the system motherboard are a diskette controller, two serial ports, one parallel port, and keyboard and mouse controller.

AlphaServer DS20 Pedestal System supports up to 10 internal storage devices including one floppy diskette drive, one CD-ROM, one additional 5.25-inch removable media device, and seven hot swap StorageWorks disk drives. The system supports up to 128 GB of internal storage with seven 18.2 GB disk drives.

System Ordering Rules

- AlphaServer DS20 systems require the mandatory selection of: a system disk, two SCSI ports, and a network adapter. Users can select 4.3 GB, 9.1 GB, or 18.2 GB disk drive as the system disk.
- To order a complete system select: (1) a system, (2) a system disk, (3) two SCSI ports, and (4) an Ethernet Adapter.

M-series Cabinet Enclosures

- Cabinet enclosures are available in two sizes: 67-inch and 79-inch.
- See Cabinet Configuration Chart for maximum combinations of systems and StorageWorks shelves supported in M-series Cabinet Enclosures.

ServerWORKS Manager provides advanced server and network management capabilities and is supplied with all AlphaServer systems. Simple Network Management Protocol (SNMP) enables information to pass from the managed system to the console for Tru64 UNIX and OpenVMS systems. Using ServerWORKS, the system manager may build and view topological maps of the network. Detailed server information is viewable, including system, network, storage, and environmental information. Alarms may be set against critical system parameters and events.

Compaq and the names of Compaq products referenced herein are either trademarks and/or service marks or registered trademarks and/or service marks of Compaq.

DIGITAL is a Trademark of Compaq Computer Corporation.

Microsoft, Windows, Windows NT, SQL Server, Office and BackOffice are either trademarks or registered trademarks of Microsoft Corporation.

Intel and Pentium are registered trademarks of Intel Corporation.

Other product and company names mentioned herein may be trademarks and/or service marks of their respective owners.

Step 1—AlphaServer DS20 Pedestal Systems

Configuration menus require the mandatory selection of:

- Tru64 UNIX system from Step 1a, **or**
- OpenVMS system from Step 1b, and
- Mandatory components:
  - One system disk drive
  - Two SCSI ports[1]
  - One Ethernet adapter

1. Two SCSI ports are required for internal removable media devices, and internal StorageWorks disk shelf operating in single-bus mode. **Note:** One additional SCSI port and an H8253-AA UltraSCSI bus splitter kit are required to operate StorageWorks disk shelf in split-bus mode.

Pedestal Systems include

- Alpha microprocessor 21264 500 MHz CPU with 4 MB ECC onboard cache.
- Pedestal enclosure with:
  - 6 expansion slots
    Five 64 bit PCI slots and one 64-bit PCI/ISA combination slot
  - 16 DIMM memory slots support 4 memory options
  - 10 storage slots
    One diskette drive slot (1.44MB diskette drive included)
    One 600 MB 32X CD-ROM drive slot (CD-ROM included)
    One additional removable media slot
    Seven StorageWorks hard drive slots.
  - Two serial ports, support full duplex asynchronous modem control
  - One bi-directional enhanced parallel port
  - PS/2 style keyboard port and mouse port.
  - 675 Watt self-switching (120/240V, 60/50Hz) power supply[1].
- 1.44 MB diskette drive in dedicated slot.
- 600 MB 32X CD-ROM—uses one removable media slot.
- 128 MB, 256 MB, or 512 MB of memory.
- 3-button mouse.
- U.S. English keyboard and 120 V power cord with North American orders.
- Selection of a country-specific keyboard and power cord is mandatory for all non-North American orders.
- Integrated Advanced Server Management features, including ServerWorks Manager kit.
- Hardware Warranty: Three-year onsite[2].
- Software Warranty[2].
  - 90-day SPD conformance with advisory telephone support for Tru64 UNIX and OpenVMS.
- Tru64 UNIX Unlimited User license, Server Extension license, Internet AlphaServer System Software kit, Netscape's Enterprise Server 3.0, **or**
- OpenVMS base license with System Manager license, Enterprise Integrated Package V2.0.

1. Included power supply provides power for normal system operation. System supports an additional optional power supply for N+1 redundancy.
2. Service upgrades are available; see Hardware and Software Supplemental Services.

Step 1a—AlphaServer DS20 Tru64 UNIX Pedestal Systems

- Systems include pre-installed Tru64 UNIX V4.0E, Base license, Unlimited User license, Server Extension license, and Internet Access Software license and Netscape's Enterprise Server 3.0.
- Systems ordered in North America include U.S. English keyboard and 120 V power cord. Selection of a country-specific keyboard and power cord is mandatory for all non-North American orders.
- Order media and documentation separately.
- Minimum operating system supported is Tru64 UNIX V4.0E.

Tru64 UNIX 6/500 MHz CPU Pedestal Systems

Note: Tru64 UNIX Pedestal Packaged systems have six available PCI slots. Installation of mandatory options and recommended graphics reduces available PCI slots.

Order Number	Memory	2 SCSI Ports	Hard Disk Drive	Network Adapter	Graphics[1]	Monitor
DA-55NJA-CA	128 MB	Mandatory	Mandatory	Mandatory	Recommended	Recommended
DA-55NJA-DA	256 MB	Mandatory	Mandatory	Mandatory	Recommended	Recommended
DA-55NJA-EA	512 MB	Mandatory	Mandatory	Mandatory	Recommended	Recommended

1. RAID Configuration Utility is accessible via the console port for Tru64 UNIX and OpenVMS systems.
   Key:Mandatory items must be on purchase order at initial order acceptance.

Step 1b—AlphaServer DS20 OpenVMS Pedestal Systems

- Systems include pre-installed OpenVMS V7.1-2, Base license, and DIGITAL Enterprise Integration Package that includes: OpenVMS Management Station, DECamds, Archive Backup System for OMT, Archive Backup Agent for NT, Datametrics ViewPoint Data Collector, Datametrics ViewPoint Management Console, eXcursion, ISG/Navigator ODBC & OLE DB Server, ISG/Navigator ODBC & OLE DB Client, Internet Product Suite, Pathworks V5.0 Lan Manager, Pathworks32, Team Links Mail Windows, MAPI Driver for All-In-1, DECwindows Motif, DECprint Supervisor, DEC TCP/IP, DECnet, OpenVMS Disk Services for Windows NT, Office Server for OpenVMS, Office Server Client Access license.
- Systems ordered in North America include U.S. English keyboard and 120 V power cord. Selection of a country-specific keyboard and power cord is mandatory for all non-North American orders.
- Order media and documentation separately.
- Minimum operating system supported is OpenVMS V7.1-2.

OpenVMS 6/500 MHz Pedestal Packaged Systems

Note: OpenVMS Pedestal Packaged systems have six available PCI slots. Installation of mandatory options and recommended graphics reduces available PCI slots.

Order Number	Memory	2 SCSI Ports	Hard Disk Drive	Network Adapter	Graphics	Monitor
DY-55NJA-CA	128 MB	Mandatory	Mandatory	Mandatory	Recommended	Recommended
DY-55NJA-DA	256 MB	Mandatory	Mandatory	Mandatory	Recommended	Recommended
DY-55NJA-EA	512 MB	Mandatory	Mandatory	Mandatory	Recommended	Recommended

Key: Mandatory items must be on purchase order at initial order acceptance.
Recommended items enhance system functionality.

Step 1c—Mandatory Options

- Selection of a minimum of two SCSI ports, a system disk drive, and a Network Adapter is **mandatory**.
- Additional options are supported, select as required.

Select one system disk drive—Mandatory

If more than one size of disk is ordered, operating system will be factory installed on the smallest disk.

Order Number	System Disk
DS-RZ1CF-VW	4.3 GB 7200 RPM UltraSCSI disk
DS-RZ1DF-VW	9.1 GB 7200 RPM UltraSCSI disk
DS-RZ1EF-VW[1]	18.2 GB 7200 RPM UltraSCSI disk

1. 18.2 GB disk drives are not supported on KZPAC-xx PCI-based RAID controllers.

Select two SCSI ports—Mandatory

- Two SCSI ports are mandatory to support internal storage:
  - Internal removable media devices are supported on KZPCM-DA and KZPBA-CA adapters only. Internal removable media devices are **not** support on KZPAC-AA/CA/CB RAID controllers.
  - Internal StorageWorks seven disk shelf requires one SCSI port when configured in single-bus mode[1]
- System includes SCSI cable(s) to connect SCSI adapters/controllers to internal storage.

1. To configure StorageWorks disk shelf in split-bus mode one addition SCSI port is required.

Step 1c—Mandatory Options *(continued)*

The requirement of two SCSI ports can be fulfilled by ordering:

- One KZPCM-DA two port UltraSCSI single-ended adapter, or
- Two KZPBA-CA one port UltraSCSI single-ended adapter, or
- One KZPBA-CA one port UltraSCSI single-ended adapter and one KZPAC-AA/CA/CB UltraSCSI RAID controller.

Order Number	SCSI Adapter and Minimum O/S version supported	Tru64 UNIX	OpenVMS
KZPCM-DA	PCI-based two port UltraSCSI Single-ended adapter and 10/100 Mbit Ethernet Combo adapter	V4.0E	V7.1-2
KZPBA-CA	PCI-based one port UltraSCSI Single-ended adapter	V4.0E	V7.1-2
KZPAC-AA	PCI-based one port UltraSCSI RAID controller	V4.0E	V7.1-2
KZPAC-CA/CB	PCI-based three port UltraSCSI RAID controller	V4.0E	V7.1-2

Select one Ethernet Adapter—Mandatory

Note: Ethernet adapter is not required if KZPCM is selected as the SCSI adapter.

Order Number	Network Adapter and Minimum O/S version supported	Tru64 UNIX	OpenVMS
DE500-BA	PCI-based 10/100 Mbit Fast Ethernet adapter UTP	V4.0E	V7.1-2
DE504-BA	PCI-based 10/100 Mbit Quad Channel Ethernet adapter	V4.0E	V7.1-2

Step 2—Additional CPU Modules (SMP Add-ons and Upgrades)

AlphaServer DS20 system supports one additional CPU.

KN310-AB Tru64 UNIX SMP upgrade includes one 6/500 CPU and Tru64 UNIX SMP license

KN310-AC OpenVMS SMP upgrade includes one 6/500 CPU and OpenVMS SMP license

Step 3—Memory

- System supports up to four memory kits (each kit includes 4 industry-standard ECC DIMMs).
- System includes one memory kit.
- System supports three additional memory kits for a system maximum of 2 GB.

MS340-BA 128 MB(4 x 32 MB DIMMs) memory kit

MS340-CA 256 MB(4 x 64 MB DIMMs) memory kit

MS340-DA 512 MB(4 x 128 MB DIMMs) memory kit

Step 4—Internal Storage

Pedestal Enclosure supports a total of ten storage devices:

- One dedicated diskette drive slot (1.44 MB diskette drive included).
- One 5.25” removable media slot (600 MB 32X CD-ROM included).
- One 5.25” additional removable media slot.
- Seven 3.5-inch internal hard disk drive slots.

Step 4—Internal Storage *(continued)*

Internal Storage Disk Drives

- Selection of one System Disk Drive is mandatory.
- Up to six additional hard disk drives are supported in internal storage disk shelf.

Note: Internal storage disk shelf is configured in single-bus mode. To configure internal storage disk shelf in split-bus mode one additional SCSI port and an H8253-AA UltraSCSI bus splitter kit are required.

DS-RZ1CF-VW	4.3 GB 7200 RPM UltraSCSI disk drive
DS-RZ1DF-VW[1]	9.1 GB 7200 RPM UltraSCSI disk drive
DS-RZ1EF-VW[2]	18.2 GB 7200 RPM UltraSCSI disk drive

1. KZPAC RAID Array 230/Plus Controller supports 9 GB Drives – for configuration information on the 32 GB Logical Drive Limit of the KZPAC, see the Systems and Option Catalog file for Storage RAID Controllers http://webir.das.dec.com/info/CU5911/CU5911HM.HTM
2. 18.2 GB disk drives are not supported on KZPAC-xx RAID controllers.

Internal UltraSCSI Cable Kit

H8253-AA	UltraSCSI bus splitter kit includes SCSI bus repeater card, two data cables, Y power cable harness, and SCSI active terminator assembly, and installation guide. Required to configure internal storage shelf in split bus mode.

Internal Removable Media Devices

- Systems include CD-ROM drive in 5.25” half-height removable media slot.
- Systems support one additional 5.25” half-height removable media device.

RRD47-VD	600 MB 32X CD-ROM drive (RRD47) 5.25” Top Gun Blue
TLZ10-LK	12/24 GB 4 mm DAT SCSI tape drive (TLZ10) 5.25” Frost White

Step 5—External Storage

UltraSCSI Configuration Rules

- UltraSCSI configurations require UltraSCSI components (controllers, adapters, shelves, disks, and cables).
- UltraSCSI adapters and RAID controllers support UltraSCSI disks at UltraSCSI speeds in UltraSCSI Top Gun Blue shelves (DS-BA356-xx).
- Fast10 BA356-xx SCSI shelves can not be retrofitted. Replace Fast10 SCSI shelf with DS-BA356-xx shelf when adding an UltraSCSI disk and when connecting to UltraSCSI adapter.
- UltraSCSI and Fast10 drives can be mixed in DS-BA356 Top Gun Blue UltraSCSI shelf. UltraSCSI adapter negotiates maximum transfer speed of drives.

UltraSCSI Connectors and Cables

- KZPBA-CA PCI one port UltraSCSI Single-ended adapter, 68HD connector, requires BN38C cable (2 to 20 m) to connect to UltraSCSI shelf.
- KZPBA-CB PCI one port UltraSCSI Differential adapter, 68HD connector, requires BN38C cable (2 to 25 m) to connect to UltraSCSI shelf or external RAID array controller.
- KZPAC-AA/CA/CB RAID controller, VHDCI connector, require BN37A cable (.3 to 20 m) to connect to UltraSCSI shelf.
- KZPCM-DA PCI two port UltraSCSI Single-ended adapter and 10/100M-bit Ethernet Combo adapter. Internal 68-pin and 50-pin HD connectors and two external 68-pin VHDCI connectors, require BN37A cable (.3 to 20 m) to connect to UltraSCSI shelf.

BN38C VHDCI to 68HD Cables—KZPBA UltraSCSI adapter to UltraSCSI shelf

BN38C-xx	VHDCI male to 68HD male. xx=2, 3, 5, 10, and 20 meter lengths

Step 5—External Storage *(continued)*

BN37A VHDCI to VHDCI Cables—KZPAC RAID controller and KZPCM UltraSCSI adapter to UltraSCSI shelf

BN37A-0C	0.3 m VHDCI male to VHDCI male
BN37A-0E	0.5 m VHDCI male to VHDCI male
BN37A-01	1.0 m VHDCI male to VHDCI male
BN37A-1E	1.5 m VHDCI male to VHDCI male
BN37A-02	2.0 m VHDCI male to VHDCI male
BN37A-2E	2.5 m VHDCI male to VHDCI male
BN37A-xx	3.0 m VHDCI male to VHDCI male. xx=3, 5, 10, 15, 20, and 25 meter lengths

UltraSCSI StorageWorks Pedestals and Shelves

UltraSCSI Top Gun Blue shelf provides support for UltraSCSI disk drives. Shelf is available in single-bus or split-bus configurations. Shelf includes a personality module and a 180 W power supply.

UltraSCSI shelf supports:

- Seven 3.5-inch hard disk drives, or
- One 5.25-inch device and four 3.5-inch hard disk drives, or
- Two 5.25-inch devices and one 3.5-inch hard disk drive.

Note: Installation of redundant power supply reduces number of 3.5” drive slots by one.

Pedestal Enclosure

DS-BA356-KF	UltraSCSI single-ended pedestal, single-bus personality module, 180 W power supply
DS-BA356-KG	UltraSCSI single-ended pedestal, split-bus personality module, 180 W power supply
DS-BA356-KH	UltraSCSI pedestal, differential personality module, 180 W power supply
DS-BA35X-HH	180 W power supply

Tabletop Tape Drives

DS-TLZ10-DB[1]	12/24 GB 4 mm DAT narrow single-ended tabletop SCSI tape, includes 120 V North American power cord, requires BN31W-xx SCSI cable
DS-TZ89N-TA[1]	35/70 GB DLT single-ended tabletop tape drive

1. Requires dedicated KZPBA-CA UltraSCSI adapter, one BN21K-xx SCSI cable, and a country-specific power cord.

Step 5a—Storage Controllers

- Selection of two SCSI ports is mandatory for internal storage, see Step 1c.
- Charts indicate minimum level of operating system supported.

		Maximum # Supported	
Order Number	**Description**	**Tru64 UNIX V4.0E**	**OpenVMS V7.1-2**
KZPCM-DA	PCI-based two port UltraSCSI Single-ended adapter and 10/100Mbit Ethernet Combo adapter, uses 1 PCI slot. Internal 68-pin and 50-pin HD connectors and two external 68-pin VHDCI SCSI connectors.	4	4
BN37A-xx	VHDCI male to VHDCI male UltraSCSI cable; required for each external UltraSCSI shelf attached to KZPCM.		

Step 5a—Storage Controllers *(continued)*

		Maximum # Supported	
Order Number	**Description**	**Tru64 UNIX V4.0E**	**OpenVMS V7.1-2**
KZPBA-CA	PCI-based one port UltraSCSI Single-ended adapter, uses 1 PCI slot. Internal 68-pin and 50-pin HD connectors and external 68-pin HD connector.	4	4
KZPBA-CB	PCI-based one port UltraSCSI Differential adapter, uses 1 PCI slot, external 68-pin HD connector.	4	4
BN38C-xx	68-pin HD male to VHDCI male UltraSCSI cable; required for each external UltraSCSI shelf attached to KZPBA-CA/CB adapter.		
KZPAC-AA[1]	PCI-based one port UltraSCSI RAID controller with 4 MB cache memory, includes RAID Array 230/Plus Subsystem software and documentation kit. VHDCI female connector. Tape drives are not supported.	4	4
KZPAC-CA[1]	PCI-based three port UltraSCSI RAID controller with 4 MB cache memory, includes RAID Array 230/Plus Subsystem Software and documentation kit. Tape drives are not supported. SCSI cable is required for each active port. Requires BN31K-0E for external third port connection.	3	3
KZPAC-CB[1]	Same as KZPAC-CA with 8 MB cache memory	3	3
KZPSC-UB	Cache battery backup for KZPAC controller		
BN37A-xx	VHDCI male to VHDCI male UltraSCSI cable; required for each external UltraSCSI StorageWorks shelf attached to KZPAC. Note: Manufacturing may substitute BN37A-02 cable for certain cabinet configurations		
BN31K-0E[1]	SCSI cable/bulkhead assembly kit with KZPAC-CA/CB, allows external connection of one third port.		
KZPAC-SB[1]	SCSI cable/bulkhead assembly kit with two ports for KZPAC-CA/CB, allows external connection of two third ports.		

1. 18.2 GB disk drives are not supported on KZPAC-xx RAID controllers.
2. SCSI cable/bulkhead assembly kit supports one third port connection from KZPAC-CA/CB, allows external connection of one third port. AlphaServer DS20 includes ten bulkhead slots, six are active PCI I/O slots.
3. SCSI cable/bulkhead assembly kit supports two third port connections from KZPAC-CA/CB, allows external connection of two third ports.

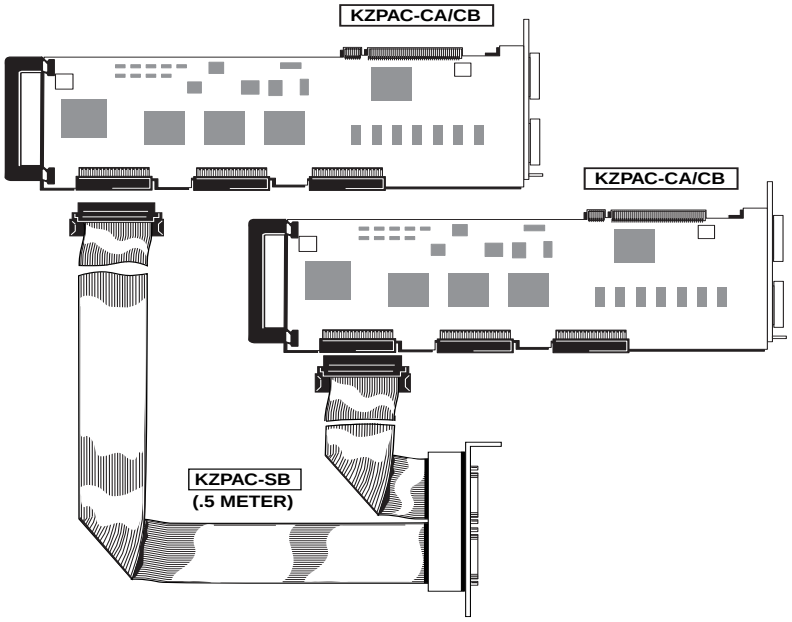

Step 5a—Storage Controllers *(continued)*

		Maximum # Supported	
Order Number	**Description**	**Tru64 UNIX V4.0E**	**OpenVMS V7.1-2**
CIPCA-BA	PCI-based CI adapter (OpenVMS systems only). Requires two PCI slots and CI cable for each adapter	—	2
BNCIA-xx	CI cable		
KFPSA-AA	PCI-based one port DSSI adapter (OpenVMS systems only) Connecting directly to StorageWorks shelf requires HSDxx controller.	—	4
BC29S-09	Connection to HSDxx controller installed in Cabinet shelf		

DSSI controllers

- Supported on OpenVMS systems only.
- Qualified for use only with KFPSA-AA DSSI adapter.
- QB-5C5AA-SA software kit required per external cache (i.e., 1 per HSD50, 2 per HSD52).

HSD50-AF	StorageWorks DSSI Array controller, supports 7 SCSI-2 disks, tapes, optical devices
HSD50-AH	StorageWorks DSSI Array controller with 16 MB cache, supports 7 SCSI-2 disks, tapes, optical disks
HSD50-AJ	StorageWorks DSSI Array controller with 32 MB cache, supports 7 SCSI-2 disks, tapes, optical disks
HSD52-AF	StorageWorks dual 6 channel DSSI Array controller with 32MB writeback cache
HSD52-AH	StorageWorks dual 6 channel DSSI Array controller with 64 MB writeback cache
HSD52-AJ	StorageWorks dual 6 channel DSSI Array controller with 128 MB writeback cache

Step 5b—M-series Cabinet Enclosure

For additional information on M-series Cabinet Enclosures see www.digital.com/alphaserver/products/m-series.html

M-series Top Gun Blue Cabinet Enclosures are available in two sizes:

- 67” high Cabinet Enclosure (H9A10-xx) 31U or 54.2” of usable vertical space.
- 79” high Cabinet Enclosure (H9A15-xx) 38U or 66.5” of usable vertical space.

Note: Order a Mounting Kit for each system installed in a Cabinet Enclosure.

Cabinet Configuration Chart for AlphaServer DS20 (11U) with StorageWorks Shelves (4U)

Cabinet Enclosure	Mounting Kit	Cabinet Height and Space		Systems	Shelves	Ballast Kit
H9A10-MC/MD	**2T-R1200-AB**	54.2 inches	31U	1 2	6 2	1 1
H9A15-MC/MD	**2T-R1200-AB**	66.5 inches	38U	1 2 3	6 6 2	2 1

Cabinet Configuration Chart for AlphaServer DS20 (11U) with StorageWorks RA3000 and Disk Shelves (12U)

- 12U of vertical cabinet space are reserved for one RA3000 controller shelf and up to five disk shelves mounted in top of cabinet, front to back. An additional 2U of vertical space is required for RA3000 controller shelf UPS.
- Disk shelves can be a combination of RA3000 DS-SWXRA-GN disk shelves and StorageWorks BA36R-RC/RD disk shelves.
  - RA3000 controller shelf supports up to a maximum of four DS-SWXRA-GN disk shelves.
  - The third and fourth DS-SWXRA-GN disk shelf ordered will be installed in rear of an M-series cabinet. Rear mounted shelves requires a 2 meter SCSI cable; order BN37A-02 SCSI cable separately for installation of third and fourth disk shelves in rear of cabinet.
- Systems are supported in remaining vertical space.

Step 5b—M-series Cabinet Enclosure *(continued)*

Cabinet Configuration Chart for AlphaServer DS20 (11U) with StorageWorks RA3000 and disk shelves (12U)

Cabinet Enclosure	Mounting Kit	Cabinet Height and Space		Systems	RA3000 + Shelves	Ballast Kit
H9A10-MC/MD	**2T-R1200-AB**	54.2 inches	31U	1	1 + 5	1
H9A15-MC/MD	**2T-R1200-AB**	66.5 inches	38U	1 2	1 + 5 1 + 5	2 1

Cabinet Configuration Chart for AlphaServer DS20 (11U) with StorageWorks BA370 (20U) and Disk Shelves

- 20U of vertical cabinet space is reserved for one front mounted BA370 Rackmount enclosure, or one front mounted and one rear mounted BA370 enclosure in top of cabinet, front to back. Note: Top Fan (1U) is removed from cabinet when BA370 Rackmount enclosure is installed.
- A Rear Cabinet Extender is **mandatory** when a second BA370 is ordered.
  - Select H9C10-TE Rear Cabinet extender for an H9A10, or H9C15-TE Rear Cabinet extender for an H9A15 Cabinet.
  - Rear Cabinet Extender provides 5.5-inches of depth to H9A10 or H9A15 cabinets.
- Systems and StorageWorks shelves are supported in remaining vertical space.
  - StorageWorks shelves are not supported in rear of Cabinet behind a front mounted BA370 Rackmount enclosure.

Cabinet Enclosure	Mounting Kit	Cabinet Height and Space		Drawers	BA370	Shelves
H9A10-MC/MD	**2T-R1200-AB**	54.2 inches	31U	1[1] 1[1]	1 Front BA370, **or** 2 Front & Back BA370s	—
H9A15-MC/MD	**2T-R1200-AB**	66.5 inches	38U	1[1] 1[1]	1 Front BA370, **or** 2 Front & Back BA370s	4 4

1. Installing one BA370 and one system in an H9A10 or H9A15 cabinet requires the **mandatory** selection of a ballast kit. A Ballast kit is **not** required if two BA370s and one system are installed in an H9A10 or H9A15 cabinet.

M-series Cabinet Enclosure Options

M-series Cabinet Enclosures require the **mandatory** selection of:

- H9A10 or H9A15 Cabinet, 120V or 240V variant.
- AlphaServer DS20 Rackmount Kit per system ordered.
- One 4.5 meter power cord per system ordered.
- Cabinet front door based on cabinet height.
- Factory Integration.
- Ballast kits as required.

Cabinet Enclosures

H9A10-MC	120 V dual 24 A controller, each with 10 NEMA 5-15R outlets, input power plug NEMA L5-30P, Americas, Asia Pacific Includes rear door, top fan tray, and 2 H7600-AA power distribution units
H9A10-MD	240 V dual 16 A controller, each with 12 IEC C13 outlets, input power plug IEC 309, 16A, Europe Includes rear door, top fan tray, and 2 H7600-DB power distribution units
H9A15-MC	120 V dual 24 A controller, each with 10 NEMA 5-15R outlets, input power plug NEMA L5-30P, Americas, Asia Pacific Includes rear door, top fan tray, and 2 H7600-AA power distribution units
H9A15-MD	240 V dual 16 A controller, each with 12 IEC C13 outlets, input power plug IEC 309, 16A, Europe Includes rear door, top fan tray, and 2 H7600-DB power distribution units

For custom integration of systems, options, and additional Compaq and third party devices, or for other cabinets, doors, and trim kits of a different color, contact Compaq CustomSystems at 1-800-AT-COMPAQ (1-800-282-6672), or contact your local authorized Compaq Certified Integration Partner.

Rackmount Kit

2T-R1200-AB	Rackmount Kit includes mounting shelf, slide rails, front dress bezel, interlock mechanism, and cable management bracket. System slides out front of cabinet for full service access. Each System installed in a cabinet requires one 4.5 meter power cord for each power supply ordered with system. BN20Z-4E for North American use, or 2T-04522-03 for non-North American use.
BN20Z-4E	4.5 meter power cord for North American use
2T-04522-03	4.5 meter power cord for non North American use

Step 5b—M-series Cabinet Enclosure *(continued)*

Cabinet Front Door

H9C10-TF	Top Gun Blue front door for H9A10-MC/MD Cabinet Enclosure
H9C15-TF	Top Gun Blue front door for H9A15-MC/MD Cabinet Enclosure

Factory Integration

YS-ASCAA-AA	Factory Integration of systems and storage devices assembled and configured in cabinet enclosure in predefined locations

Ballast Kit

Ballast is added to a cabinet at specific locations for specific configurations to meet safety regulations for installation, operation, and service. It is required in H9A15 cabinets when only one system is installed. Refer to Cabinet Configuration Chart.

H9C10-MC	Two 35-40 lbs. Steel plates

Shelves supported in M-series Cabinets

BA36R-RC	UltraSCSI single-ended RETMA rack, single-bus personality module, 180 W power supply
BA36R-RD	UltraSCSI single-ended RETMA rack, split-bus personality module, 180 W power supply
BA35R-MR	Rackmount StorageWorks controller shelf with RETMA mounting kit, and NEMA power for H9A10-MC/H9A15-MC cabinet, North America, Asia Pacific. Order BN30B-02 for mounting in H9A10-MD/H9A15-MD cabinet (Europe).
CK-BA35X-HH	180 W power supply

Shelves supported in SW8xx and 5xx Cabinets

DS-BA356-JD	UltraSCSI single-ended METRIC rack, single-bus personality module, 180 W power supply
DS-BA356-JE	UltraSCSI single-ended METRIC rack, split-bus personality module, 180 W power supply
DS-BA356-JF	UltraSCSI single-ended METRIC rack, single-bus, differential personality module, 180 W power supply

Removable Media Devices for External StorageWorks shelves

TLZ09-VA	8 GB 4 mm DAT 93 MB/min (compressed) narrow SCSI tape drive in StorageWorks carrier
DS-TLZ10-VA	12/24 GB 4 mm DAT narrow SCSI tape drive in StorageWorks carrier
TLZ9L-VA	32-64 GB 4 mm DAT SCSI tape drive loader in full-height StorageWorks carrier
DS-TZ89N-VW	35/70 GB DLT single-ended tape drive in StorageWorks carrier
TZ88N-VA	20/40 GB DLT 3 MB/s narrow SCSI cartridge tape drive in StorageWorks carrier
DS-RRD47-VA	600 MB 32X CD-ROM drive in StorageWorks carrier
DS-RRD47-VU	600 MB 32X CD-ROM, second drive supported in DS-RRD47-VA carrier

StorageWorks Power Supply

DS-BA35X-HH	180 W power supply

Compaq CustomSystems Support

Cabinets containing systems and storage must be assembled by qualified assemblers: Compaq Manufacturing, Compaq CustomSystems Group, or an authorized Compaq Certified Integration Partner.

For custom integration of systems, options, cabinet expansion offerings, and additional Compaq and third party devices, or for other cabinets, doors, and trim kits of a different color, contact Compaq CustomSystems at 1 800-AT-COMPAQ (1-800-282-6672), or your local authorized Compaq Certified Integration Partner.

Step 5c—External Storage Controllers

CI Controllers

- Supported on OpenVMS systems only.
- Requires CIPCA-BA Storage controller and cables.
- QB-5C4AA-SA software kit required per external cache (i.e., 1 per HSJ50, 2 per HSJ52).

HSJ50-AF	StorageWorks 6 channel CI Array controller 32 MB writeback cache and external cache battery
HSJ50-AH	StorageWorks 6 channel CI Array controller 64 MB cache and external cache battery
HSJ50-AJ	StorageWorks 6 channel CI Array controller 128MB cache and external cache battery
HSJ52-AF	StorageWorks Dual 6 channel CI Array controller 64 MB cache and dual external cache battery
HSJ52-AH	StorageWorks Dual 6 channel CI Array controller 128 MB cache and dual external cache battery
HSJ52-AJ	StorageWorks Dual 6 channel CI Array controller 256MB cache and dual external cache battery
HSJ54-AJ	StorageWorks Quad 6 channel CI Array controller 512MB cache and two dual external cache batteries

Controller Accessories

H879-AA	External SCSI 68-pin male 8-bit or 16-bit differential terminator
H885-AA	SCSI Tri-link connector, 68-pin, two female and one male connector
BN21W-0B	SCSI Y cable 68-pin, two female and one male
BA35R-MR	Rackmount StorageWorks controller shelf with RETMA mounting kit, and NEMA power for H9A10-MC/ H9A15-MC Cabinet, Americas, Asia Pacific. Order BN30B-02 for mounting in H9A10-MD/ H9A15-MD cabinet (Europe)
BN30B-02	IEC to IEC power cord (Gray) for BA35R-MR self mounted in H9A1x-MD Cabinet (Europe)
BN35S-02	IEC to IEC power cord (Black) for BA35R-MR shelf mounted in H9A1x-MD Cabinet (Europe)
BA35X-HF	Power supply for N+1 redundant support in UltraSCSI StorageWorks controller shelf
SC008-AC	Star Coupler Passive Hub device, supports eight CI ports

Step 5d—UltraSCSI RAID Array Controllers and UltraSCSI RAID Packaged Solutions

RAID Array 3000 Rackmount Controller Shelf

- RA3000 is currently supported on Tru64 UNIX running minimum of V4.0D operating system software.
- Supported SCSI adapter: KZPBA-CB PCI-based one port UltraSCSI Differential adapter.
- Selection of an RA3000 Solutions Software Kit (QB-5TWAB-SA) is required.

DS-SWXRA-GH RA3000 Rackmount controller shelf with one controller, 110 V (Blue).

Includes: Ultra SCSI BA356 controller shelf, one HSZ22 two channel controller with 16 MB cache, integrated Environmental Monitoring Unit (EMU), two 180 Watt power supplies, two dual port host differential UltraSCSI I/O SBBs, Dual channel UltraSCSI single-ended personality modules, one 120V 1000VA rackmount UPS, 5 meter host SCSI cable (BN37A-05), BN38E-0B adapter, UPS serial cable, PC connection serial cable (DB-9), two 68 HD tri-link adapters (H8861-AA), two North American power cords, and RETMA mounting bracket. Disk shelves and disks are not included.

Requires: Solutions Software Kit for platform, host adapter, RA3000 disk shelf, and disks
Options: Second HSZ22 controller, up to 3 additional RA3000 disk shelves, cache memory upgrade

Step 5d—UltraSCSI RAID Array Controllers and UltraSCSI RAID Packaged Solutions *(continued)*

DS-SWXRA-GK RA3000 Rackmount controller shelf with one controller, 230 V (Blue).

Includes: UltraSCSI BA356 controller shelf, one HSZ22 two channel controller with 16 MB cache, integrated Environmental Monitoring Unit (EMU), two 180 Watt power supplies, two dual port host differential UltraSCSI I/O SBBs, Dual channel UltraSCSI single-ended personality modules, one 230V 1000VA rackmount UPS, 5 meter host SCSI cable (BN37A-05), BN38E-0B adapter, UPS serial cable, PC connection serial cable (DB-9), two 68 HD tri-link adapters (H8861-AA), RETMA mounting bracket. Disk shelves and disks are not included.

Requires: Solutions Software Kit for platform, two country-specific power cords, host adapter, RA3000 disk shelf, and disks

Options: Second HSZ22 controller, up to 3 additional RA3000 disk shelves, cache memory upgrade

RAID Array 3000 Rackmount Disk Shelf

- Select one to four disk shelves.
- Third and fourth DS-SWXRA-GN disk shelf ordered will be installed in rear of an M-series cabinet. Rear mounted shelves require a 2 meter SCSI cable (BN37A-02)—order SCSI cable separately for installation of third and fourth disk shelves.

DS-SWXRA-GN RA3000 Rackmount disk shelf (Blue)
Includes: UltraSCSI BA356 disk shelf, two 180 W power supplies, single-ended UltraSCSI personality card, one half meter SCSI cable (BN37A-0E), two North American power cords, and RETMA mounting bracket. Disks are not included. Order two country-specific power cords for non North American use.

HSZ22 Controller

Note: Second HSZ22 controller ordered is field installable **only**, it will not be factory installed. Requires BN37A-0E SCSI jumper cable, order separately.

DS-HSZ22-AA Second HSZ22 controller with 16 MB of cache and two 16 MB SIMMs for mirror cache, one BN37A 05 5 meter UltraSCSI cable, one BN38E-0B cable adapter—field installable only.
Note: Second HSZ22 controller does not require an additional Solution Software Kit.

DS-HSZ22-AB Second HSZ22 controller with 32 MB of cache and two 32 MB SIMMs for mirror cache, one BN37A 05 5 meter UltraSCSI cable, one BN38E-0B cable adapter—field installable only.
Note: Second HSZ22 controller does not require an additional Solution Software Kit.

RA3000 Solutions Software Kit for Tru64 UNIX

- StorageWorks Command Console (SWCC) software
- Platform specific software
- Installation scripts, and installation documentation.

QB-5TWAB-SA RA3000 Solutions Software Kit for Tru64 UNIX

BA370 Rackmounted Enclosure

A Rear Cabinet Extender is **mandatory** when a second BA370 is ordered for an H9A10 or H9A15 M-Series Cabinet. Rear Cabinet Extender provides 5.5-inches of depth to H9A10 or H9A15 cabinets to allow two BA370 enclosures to be installed front to back in cabinet.

2T-BA370-AS **BA370 Front mount rackmount enclosure** includes RETMA rackmount kit. First BA370 enclosure must be front mounted in cabinet, 20U height

2T-BA370-AR **BA370 Rear mount rackmount enclosure** includes RETMA rackmount kit. Second BA370 enclosure must be rear mounted in cabinet, 20U height
Note: Rear Cabinet Extender, H9C10-TE or H9C15-TE, is mandatory for second BA370.

H9C10-TE Rear Cabinet Extender, Top Gun Blue, for H9A10-MC/MD cabinets

H9C15-TE Rear Cabinet Extender, Top Gun Blue, for H9A15-MC/MD cabinets

Step 5d—UltraSCSI RAID Array Controllers and UltraSCSI RAID Packaged Solutions *(continued)*

ESA 10000 Storage Arrays and RAID Array 7000 (RA7000) Options

- ESA 10000 Storage Arrays and RAID Array 7000 (HSZ70 Product Set) are supported on AlphaServer DS20 systems.
- The HSZ70 is supported on KZPBA-CB UltraSCSI differential controller.

ESA 10000 Enterprise Storage Arrays

See StorageWorks Packaged Solutions in StorageWorks Chapter of *Systems and Options Catalog*, or on the WEB at http://www.digital.com/info/SOHOME/ for additional configuration information on HSZ70 controllers in ESA 10000 and RA7000.

DS-SWXES-AA/AB ESA 10000 high capacity/general business base unit

Includes**:** Data Center 600 mm enclosure
2 BA370-AA Rackmounted shelves with 5 shelf power supplies each, expandable to 8
2 HSZ70 six port controllers 64 MB mirrored write back cache each, expandable to 128 MB each
6 Ultra SCSI expansion cables
1 10 meter host to controller cable (BN37A-10)
Serial line assembly with adapters (9 pin and 25 pin)
Power cord and documentation
Supports up to 48 drives

Requires: HSZ70 Solutions Software kit for platform, host adapter, and disks to be ordered separately
Options: 64 MB cache upgrade and fully redundant power

DS-SWXES-BA/BB ESA 10000 high bandwidth base unit

Includes: Data Center 600 mm enclosure
2 BA370-AA Rackmounted shelves with 5 shelf power supplies each, expandable to 8
4 HSZ70 six port controllers 64 MB mirrored write back cache each, expandable to 128 MB each
2 10 meter host to controller cables (BN37A-10)
Serial line assembly with adapters (9 pin and 25 pin)
Power cord and documentation
Supports up to 48 drives

Requires: HSZ70 Solutions Software kit for platform, host adapter, and disks to be ordered separately
Options: 64 MB cache upgrade and fully redundant power

DS-SWXES-CA/CB ESA 10000 dual expansion base unit

Includes: Data Center 600 mm enclosure
2 BA370-AA Rackmounted shelves with 5 shelf power supplies each, expandable to 8
12 Ultra SCSI expansion cables
SW600 cabinet joiner kit
Power cord and documentation
Supports up to 48 drives

Requires: HSZ70 Solutions Software kit for platform, host adapter, and disks to be ordered separately
Options: Fully redundant power

DS-SWXES-DA/DB ESA 10000 single expansion w/ dual controllers base unit

Includes: Data Center 600 mm enclosure
1 BA370-AA Rackmounted shelf with 5 shelf power supplies, expandable to 8
2 HSZ70 six port controllers 64 MB mirrored write back cache each, expandable to 128 MB each
1 10 meter host to controller cable (BN37A-10)
Serial line assembly with adapters (9 pin and 25 pin)
Power cord and documentation
Supports 24 drives, expandable to 48 with BA370 rackmount upgrade.

Requires: HSZ70 Solutions Software kit for platform, host adapter, and disks to be ordered separately
Options: 64 MB cache upgrade, fully redundant power, and BA370 rackmount upgrade.

Step 5d—UltraSCSI RAID Array Controllers and UltraSCSI RAID Packaged Solutions *(continued)*

RAID Array 7000 (RA7000)

DS-SWXRA-HA RAID Array 7000 with Dual controllers

Includes: 24 SBB Departmental Cabinet
2 HSZ70 6 port controllers with 64 MB mirrored write-back cache each, expandable to 128 MB each
I/O expansion module
Dual cache battery in SBB with cable
Five 180 watt power supplies, expandable to eight
Fully redundant cooling
Environmental Monitor Unit (EMU)
5 meter host to controller cable BN37A-05 with BN38E-0B VHDCI to 68 HD conversion cable,
Serial line kit, controller to controller jumper cable for redundant controllers, and U.S. power cord.

Requires: HSZ70 Solutions Software Kit for platform, host adapter, and disks to be ordered separately
Options: 64 MB cache upgrade, Up to two RA7000 Expansion cabinets. Optional power supplies.

DS-SWXRA-HB RAID 24 UltraSCSI SBB Pedestal Expansion cabinet

DS-SWXRA-HC RAID Array 7000 with Single controller

Includes: 24 SBB Storage Cabinet
1 HSZ70 6 port controller with 64 MB mirrored write-back cache, expandable to 128MB
I/O expansion module
Single cache battery in SBB with cable
Five 180 watt power supplies expandable to eight
Fully redundant cooling
Environmental Monitor Unit (EMU)
5 meter host to controller cable BN37A-05 with BN38E-0B VHDCI to 68 HD conversion cable,
Serial line kit, controller to controller jumper cable for redundant controllers, and U.S. power cord.

Requires: HSZ70 Solutions Software Kit for platform, host adapter, and disks to be ordered separately
Options: Second HSZ70 controller and cache battery; 64 MB cache upgrade; Up to two RA7000 Expansion cabinets. Optional power supplies.

Adapters and Platform Specific Solutions Software

- Each KZPBA-CA adapter ordered to support HSZ70(s) requires an HSZ70 Solutions Software Kit.
- HSZ70 Solutions Software Kits must be ordered for each new HSZ70 controller in a configuration.
- HSZ70 Solutions Software Kits provide tools needed to link ESA 10000 to a wide variety of vendor platforms.
- HSZ70 Solutions Software Kits with -SA variants included documentation
  HSZ70 Solutions Software Kits with -SB variants do not include documentation, select for each additional adapter ordered if documentation is available onsite.

HSZ70 Solutions Software Kits include:

- PCMCIA card containing software for storage controller.
- StorageWorks Command Console (SWCC) software, and software licenses.
- HSZ70 and SWCC supporting documentation.

Select Adapter and HSZ70 Solutions Software Kit for appropriate platform

Supported Adapters	HSZ70 Solutions Software Kit	Host Platform
KZPBA-CB	**QB-5SBAB-SA/SB** **QB-5SBAC-SA/SB**	Tru64 UNIX V4.0E OpenVMS V7.1-2

UltraSCSI RAID Array Controller

DS-HSZ70-AH StorageWorks UltraSCSI RAID Array controller includes 64 MB cache, 6 UltraSCSI single-ended channels, CLI cable kit, controller to controller jumper cable, and two ECB cables. Requires HSZ70 Solutions Software Kit and external cache battery (QB-5SBAB-SA/SB for Tru64 UNIX, QB-5SBAC-SA/SB for OpenVMS).

Step 5d—UltraSCSI RAID Array Controllers and UltraSCSI RAID Packaged Solutions *(continued)*

Cache Upgrade

Select cache upgrade for HSZ70 controllers. Redundant controllers require equal amounts of cache

DS-HSSIM-AB	64 MB Cache Upgrade for HSZ70

Disk Expansion Cabinet

Note: Order Expansion Cable Kit for each Disk Expansion Cabinet selected.

DS-SWXRA-HB	Disk Expansion Cabinet, includes 24 disk slots, 5 power supplies, redundant cooling, EMU and PVA, power cable
DS-BNK37-1E	Expansion Cable Kit, required for each Disk Expansion Cabinet DS-SWXRA-HB
DS-BA35X-HH	180 Watt Power Supply. Fully redundant power requires three additional power supplies, one additional DS-BA35X-HE power control unit, and one additional DS-SW6XP-AA/AB power distribution unit.
DS-BA35X-HE	ac Power Control Unit, required when more than five 180 Watt power supplies are installed
DS-SW6XP-AA/AB	SW600 Power Distribution Unit, quantity of 1 required for each SW600 for full power redundancy.

Additional Options

DS-HS35X-BC	Single replacement external cache battery, one battery in a single Blue SBB
DS-HS35X-BD	Dual replacement external cache battery, two batteries in a single Blue SBB, supports cache of dual redundant controllers. Requires ordering 1 Power Verification and Addressing (PVA) DS-BA35X-EC
DS-BA35X-BA	Battery shelf for SW600 cabinet
DS-BA35X-MK	Dual speed fan kit
DS-BA35X-MN	Single-ended I/O module
DS-BA35X-EB	Environmental Monitor Unit (EMU)
DS-BA35X-EC	Power Verification and Addressing (PVA)
BN37A-xx	Host to controller cable
BN38E-0B	68-pin HD to VHDCI UltraSCSI conversion cable
H9C10-JC	H9A10 Cabinet Joiner Kit for SW600
H8865-AA	UltraSCSI Single-ended external terminator
H8863-AA	UltraSCSI Differential external terminator
DS-BA370-AA	Rackmountable BA370 shelf includes five 180 W power supplies, eight high power blowers, RETMA and Metric mounting kit, not supported in M-series Cabinet Enclosure.
DS-SW600-AA	60 Hz 600 mm Storage Cabinet includes single phase power distribution unit DS-SW6XP-AA
DS-SW600-AB	50 Hz 600 mm Storage Cabinet includes single phase power distribution unit DS-SW6XP-AA

Step 6—Monitors

RAID Configuration Utility is accessible via the console port for Tru64 UNIX and OpenVMS systems. Optional graphics capability is available.

Graphics monitors other than those listed below can be used if compatible with SVGA graphics ordered with a system.

Note: Selection of a video extension cable and a country specific power cord is mandatory for all monitor variants.
See Step 6a for video extension cable
See Step 6b for country specific power cords

3R-VRQV5-24/11	15" (13.8" viewable image size) Corporate Series auto-scan color monitor, flat square Invar CRT, 0.28 mm dot pitch, VGA to 1024 x 768 @ 85 Hz, TCO 95, MPRII, Energy Star, attached 1.8 meter video cable. Requires mandatory selection of video extension cable and country specific power cord for all variants. –24 = Northern Hemisphere without power cord –11 = Southern Hemisphere without power cord

Step 6—Monitors *(continued)*

SN-VRQP7-24/23 17” (16.0” viewable image size) professional series auto-scanning color monitor, Trinitron CRT, 0.25 mm aperture grill pitch, VGA to 1280 x 1024 at 75 Hz, TCO 95, MPR-II, Energy Star, attached 1.8 meter video cable. Requires mandatory selection of video extension cable and country specific power cord for all variants.
–24 = Northern Hemisphere without power cord
–23 = Southern Hemisphere without power cord

SN-VRQP1-24/23 21" (19.6" viewable image size) auto-scanning color monitor, Trinitron CRT, 0.25 mm aperture grill pitch, VGA to 1600 x 1200 at 75 Hz NI, TCO 95, Energy Star, includes a 1.8 meter video cable. Requires mandatory selection of video extension cable and country specific power cord for all variants.
–24 = Northern Hemisphere without power cord
–23 = Southern Hemisphere without power cord

Step 6a—Video Extension Cable

BN39C-02 1.8 meter video extension cable—mandatory for each monitor ordered

Step 6b—Monitor Power Cords

BN26J-1K North American, 120 V, 75 inches long
3X-BN46F-02 Japan (Dentori approved) 2 m long, 125V, 12A
BN19H-2E Australia, New Zealand, 2.5m long
BN19C-2E Central Europe, 2.5 m long
BN19A-2E UK, Ireland, 2.5 m long
BN19E-2E Switzerland, 2.5 m long
BN19K-2E Denmark, 2.5 m long
BN19M-2E Italy, 2.5 m long
BN19S-2E Egypt, India, South Africa, 2.5 m long
BN18L-2E Israel, 2.5 m long

Step 7—Graphics Adapters

- RAID Configuration Utility is accessible via the console port for Tru64 UNIX and OpenVMS systems. Optional graphics capability is available.
- Select graphics adapter, monitor, and country specific keyboard for Tru64 UNIX and OpenVMS systems if required.
- Tru64 UNIX systems support multi-head homogeneous graphics. A monitor is recommended for each graphics adapter.

		Maximum # Supported	
Order Number	**Description**	**Tru64 UNIX V4.0E**	**OpenVMS V7.1-2**
SN-PBXGB-AA	Powerstorm 3D30 2D/3D 8-plane graphics adapter	1	1
SN-PBXGI-AD	PowerStorm 4D51T 3D Graphics, 16 MB texture memory 1280 x 1024, High Performance 3D shading, texture mapping, OpenGL	4	—

Step 8—Networks and Communications

		Maximum # Supported	
Order Number	**Description**	**Tru64 UNIX V4.0E**	**OpenVMS V7.1-2**
DE500-BA	PCI-based 10/100-Mbit 1 port Fast Ethernet controller (Twisted Pair)	2	2
DE504-BA	PCI-based 10/100-Mbit 4 Port Fast Ethernet controller (Twisted Pair)	1	1
BN25G-xx	Cable for 10BaseT Twisted Pair connection		
DE500-FA	PCI-based 10/100-Mbit Fast Ethernet controller (MMF)_	2	2
BN34B-xx	SC-SC Dual FO cable, mm, pp. Xx = length in meters		
DEFPA-AB	PCI-based FDDI Adapter, single attachment station (SAS), multi-mode fiber (MMF), SC connector	2	2
DEFPA-DB	PCI-based FDDI Adapter, DAS, MMF, SC connector	2	2
BN34D-xx	MIC-SC dual fiber optic cable		
BN34B-xx	SC to SC dual fiber optic cable		
DEFPA-UB	PCI-based FDDI Adapter, SAS, TP-PMD, requires BN25H-03	2	2
DEFPA-MB	PCI-based FDDI Dual Adapter, DAS, TP-PMD, requires BN25H-03	2	2
BN25H-03	3 m (9.8 ft.) FDDI crossover cable		
PBXDA-AA	PCI-based 4 Port Asynchronous Controller, cable included	2	2
PBXDA-AB	PCI-based 8 Port Asynchronous Controller, cable included	2	2
PBXDA-AC	PCI-based 16 Port Asynchronous Controller, cable included	2	2
CXI01-AB **CXI01-AC** **CXI01-AF**	Asynchronous multiport MUX expander XEM Asynchronous MUX cable converter (RJ45-DB25) Asynchronous MUX adapter (RJ45-MJ11), 8 pack		

Step 9—Additional Power Supply

- One additional power supply may be added to AlphaServer DS20 Pedestal system for N+1 redundancy.
- Redundant Power Supply requires a country-specific power cord.

H7899-AA 675 W Redundant Power Supply Option, requires country-specific 4.5 meter rackmount power cord

Step 10—Keyboards, Power Cords, and Documentation

Systems ordered in North America include U.S. English keyboard and 120V power cord. Selection of a country-specific keyboard and power cord is mandatory for all non-North American orders.

Tru64 UNIX Keyboard	OpenVMS Keyboard	Country
SN-LKQ47-AA	**LK461-A2**	US/English
SN-LKQ47-AB	**LK461-AB**	Belgian
SN-LKQ47-AC	**LK461-AC**	Canadian/French
SN-LKQ47-AD	**LK461-AD**	Danish
SN-LKQ47-AE		UK
SN-LKQ47-AF	**LK461-AF**	Finnish
SN-LKQ47-AG	**LK461-AG**	German
	LK461-AH	Dutch
SN-LKQ47-AI	**LK461-AI**	Italian
SN-LKQ47-AJ		Japanese
SN-LKQ47-AK	**LK461-AK**	Swiss/French
	LK461-AL	Swiss/German

Step 10—Keyboards, Power Cords, and Documentation *(continued)*

Tru64 UNIX Keyboard	OpenVMS Keyboard	Country
SN-LKQ47-AM	**LK461-AM**	Swedish
SN-LKQ47-AN	**LK461-AN**	Norwegian
SN-LKQ47-AP	**LK461-AP**	French
	LK461-AQ	Canadian/English
SN-LKQ47-AR		Latin-American
SN-LKQ47-AS	**LK461-AS**	Spanish
SN-LKQ47-AT	**LK461-AT**	Hebrew
SN-LKQ47-AV	**LK461-AV**	Portuguese
SN-LKQ47-AX		Bhcsy
SN-LKQ47-BA		International
SN-LKQ47-BH	**LK461-BH**	Greek
SN-LKQ47-BI		Taiwanese
SN-LKQ47-BK		Korean
	LK461-BL	Romanian
SN-LKQ47-BP	**LK461-BP**	Polish
SN-LKQ47-BQ	**LK461-BQ**	Hungarian
SN-LKQ47-BR		Arabic
SN-LKQ47-BT	**LK461-BT**	Cyrillic
SN-LKQ47-BU	**LK461-BU**	Turkish
SN-LKQ47-BV	**LK461-BV**	Czech
	LK461-BW	Turkish-French
	LK461-BY	Yugoslavian
SN-LKQ47-CB		Thai
SN-LKQ47-CV		S. Chinese
SN-LKQ47-CZ	**LK461-CZ**	Slovak

Pedestal Power Cords

Systems ordered in North America include one BN26J-1K 120 V North American power cord. Order one country specific power cord for all systems ordered in Europe and AP.

BN26J-1K	North American, 120 V, 75 inches long
3X-BN46F-02	Japan (Dentori approved) 2 m long, 125V, 12A
BN19H-2E	Australia, New Zealand, 2.5 m long
BN19C-2E	Central Europe, 2.5 m long
BN19A-2E	UK, Ireland, 2.5 m long
BN19E-2E	Switzerland, 2.5 m long
BN19K-2E	Denmark, 2.5 m long
BN19M-2E	Italy, 2.5 m long
BN19S-2E	Egypt, India, South Africa, 2.5 m long
BN18L-2E	Israel, 2.5 m long

Rackmount Power Cords

Each system installed in a cabinet requires a Rackmount Kit 2T-R1200-AB, and one 4.5 meter power cord for each power supply ordered with system.

BN20Z-4E	4.5 m rackmount power cord for North America
2T-04522-03	4.5 m rackmount power cord for non-North America

Step 10—Keyboards, Power Cords, and Documentation *(continued)*

Documentation

QZ-014AA-GZ	Additional AlphaServer DS20 User Guide (print and CD), Installation Card, and Release Notes

Step 11—Printers and Remote Console

Systems include two full duplex asynchronous serial ports and one bi-directional enhanced parallel port.

Asynchronous serial ports have 9-pin D-subminiature connectors. A 9-pin to MMJ adapter (H8571-J) is required for each connection. See printer section of *Systems and Options Catalog* for serial and parallel printer information.

Step 11a—Console Terminal

- RAID Configuration Utility is accessible via the console port for Tru64 UNIX and OpenVMS systems.
- Console terminal with EIA-232 25-pin DSUB connector required unless otherwise available.
- Shielded console cable (BC16E-25) is required for console terminal unless available onsite.

VT510-xx	VT510 terminal
BC16E-25	Shielded console cable with six-pin MMJ connectors

Step 12—Software

Tru64 UNIX

Software Processor Code = E

- Tru64 UNIX Packaged systems include Traditional Unlimited User license.
- Tru64 UNIX Packaged systems require operating system media and documentation for first system on site.

Tru64 UNIX Media and Documentation—required for first system on site

QA-MT4AA-H8	Tru64 UNIX media and online documentation on CD-ROM
QA-MT4AA-GZ	Tru64 UNIX full hard copy documentation

Tru64 UNIX Layered Products CD-ROM

QA-054AA-H8	Layered products media and documentation for Tru64 UNIX on CD-ROM

DECnet for Tru64 UNIX

QL-MTJAE-AA	DECnet/OSI end-system license for Tru64 UNIX
QL-MTKAE-AA	DECnet/OSI extended function license for Tru64 UNIX

DECsafe ASE license

QB-05SAE-AA	TruCluster Available Server license and documentation for Tru64 UNIX Alpha systems—media available on layered product CD-ROM
QL-05SAE-AA	TruCluster Available Server license for Tru64 UNIX Alpha systems

OpenVMS

Software Processor Code = E

OpenVMS Concurrent Use Licenses are **not** specific to a single system and can be moved between systems at user discretion. OpenVMS Concurrent Use Licenses can also be shared in a mixed OpenVMS VAX and OpenVMS Alpha Cluster.

Step 12—Software *(continued)*

OpenVMS Concurrent Use Licenses

QL-MT3AA-3B	OpenVMS Concurrent Use 1-user license
QL-MT3AA-3C	OpenVMS Concurrent Use 2-user license
QL-MT3AA-3D	OpenVMS Concurrent Use 4-user license
QL-MT3AA-3E	OpenVMS Concurrent Use 8-user license
QL-MT3AA-3F	OpenVMS Concurrent Use 16-user license
QL-MT3AA-3G	OpenVMS Concurrent Use 32-user license
QL-MT3AA-3H	OpenVMS Concurrent Use 64-user license
QL-MT3AA-3J	OpenVMS Concurrent Use 128-user license
QL-MT3AA-3K	OpenVMS Concurrent Use 256-user license
QL-MT2AE-AA	OpenVMS Traditional unlimited user license

OpenVMS Media and Documentation—required for first system on site

QA-MT1AA-H8	OpenVMS media and online documentation CD-ROM
QA-001AA-GZ	OpenVMS hard copy documentation

OpenVMS Layered Products CD-ROM

QA-03XAA-H8*	Layered products media and documentation for OpenVMS on CD-ROM

* Includes DIGITAL Enterprise Integration Server for OpenVMS media and documentation.

DIGITAL Enterprise Integration Package

QA-5LVAA-H8	DIGITAL Enterprise Integration Server for OpenVMS media and documentation

Optional OpenVMS Licenses

QL-MTGAE-AA	DECnet extended function license for OpenVMS
QL-MTHAE-AA	DECnet end-system to extended function upgrade license for OpenVMS
QL-MUZAE-AA	OpenVMS Cluster license for Alpha systems
QL-2A1AE-AA	OpenVMS Volume Shadowing license

DSSI Information

EK-410AB-MG	DSSI VMScluster Installation Guide
EK-D4AXP-TS	DSSI VMScluster Troubleshooting Guide

Step 13—Hardware and Software Supplemental Support Services

Hardware—Americas and Asia Pacific only

- Systems include three-year hardware warranty, onsite with 5 x 9, 24-hour response time.
- An option ordered as part of the Initial System Sale takes on the Warranty of the enclosure.
- An option added after the Initial System Sale takes on the Warranty of the enclosure until the enclosure warranty ends.
- All unique AlphaServer DS20 options have a minimum of 1 Year Return to Compaq Warranty.
- Select optional Hardware Supplemental Support Services if required.

Step 13—Hardware and Software Supplemental Support Services *(continued)*

Supplemental Service for System with 1 GB of memory or less.

FM-TC4HR-36	5 x 9, 4-hour response time
FM-TC512-36	5 x 12, 4-hour response time
FM-TC616-36	6 x 16, 4-hour response time
FM-TC724-36	7 x 24, 4-hour response time
FM-TCXHW-60	Years 1-5, next day, onsite
FM-TC4HR-60	Years 1-5, 5x9, 4-hour response time
FM-TC512-60	Years 1-5, 5x12, 4-hour response time
FM-TC616-60	Years 1-5, 6x16, 4-hour response time
FM-TC724-60	Years 1-5, 7x24, 4-hour response time

Supplemental Service for System with more than 1GB of memory.

FM-TF4HR-36	5 x 9, 4-hour response time
FM-TF512-36	5 x 12, 4-hour response time
FM-TF616-36	6 x 16, 4-hour response time
FM-TF724-36	7 x 24, 4-hour response time
FM-TFXHW-60	Years 1-5, next day, onsite
FM-TF4HR-60	Years 1-5, 5x9, 4-hour response time
FM-TF512-60	Years 1-5, 5x12, 4-hour response time
FM-TF616-60	Years 1-5, 6x16, 4-hour response time
FM-TF724-60	Years 1-5, 7x24, 4-hour response time

Installation Services

FM-TC12X-IN	Hardware product installation for AlphaServer DS20
FM-TCMEM-IN	Add-on memory installation for AlphaServer DS20
FM-TCSMP-IN	Add-on CPU installation for AlphaServer DS20

Software—Americas and Asia Pacific only

- Tru64 UNIX and OpenVMS Systems include 90-day Conformance to SPD and Telephone Advisory Support. Select optional Software Supplemental Support Services, if required.
- Software service upgrades for Tru64 UNIX includes advisory and remedial software support with new version license rights for operating system for time period indicated.
- Software service upgrades for OpenVMS include advisory and remedial software support with new version license rights for operating system and Enterprise Integration Package for time period indicated.
- Software service upgrades for SMP Upgrades running Tru64 UNIX or OpenVMS include new version license rights for Tru64 UNIX or OpenVMS SMP Upgrades for the time period indicated. (One required for **each** SMP Upgrade).

FM-10UNS-12	12-month Software Supplemental Support for Tru64 UNIX AlphaServer DS20 systems
FM-10UNS-36	36-month Software Supplemental Support for Tru64 UNIX AlphaServer DS20 systems
FM-10UNS-60	60-month Software Supplemental Support for Tru64 UNIX AlphaServer DS20 systems
FM-10VMS-12	12-month Software Supplemental Support for OpenVMS AlphaServer DS20 systems
FM-10VMS-36	36-month Software Supplemental Support for OpenVMS AlphaServer DS20 systems
FM-10VMS-60	60-month Software Supplemental Support for OpenVMS AlphaServer DS20 systems

Software—Americas and Asia Pacific only

FM-12SMP-12	12-month Software Supplemental Support for OpenVMS or Tru64 UNIX AlphaServer DS20 SMP Upgrade
FM-12SMP-36	36-month Software Supplemental Support for OpenVMS or Tru64 UNIX AlphaServer DS20 SMP Upgrade
FM-12SMP-60	60-month Software Supplemental Support for OpenVMS or Tru64 UNIX AlphaServer DS20 SMP Upgrade

Step 13a—Hardware and Software Supplemental Support Services (Europe only)

Europe does **not** have specific part numbers for Hardware and Software Supplemental Support Services. Prices are quoted based on worldwide service reference pricing, contact MCS Sales in your country for information on Hardware and Software Supplemental Support Services.

AlphaServer DS20 System Diagram Front View

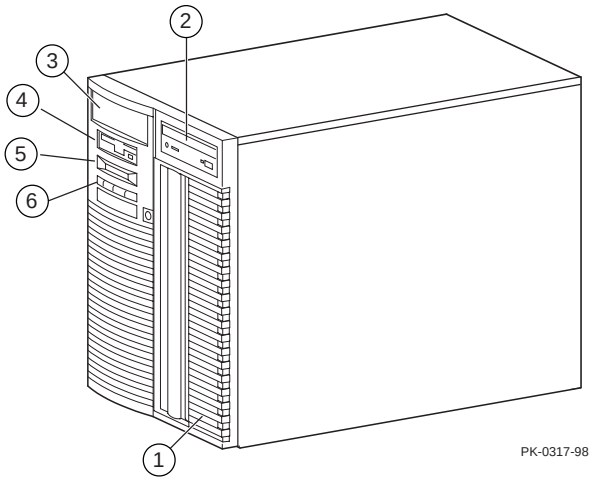

1. StorageWorks shelf for hard disk drives
2. SCSI CD-ROM drive
3. Optional removable media drive bay
4. Floppy diskette drive
5. Control panel display
6. Control panel switches

AlphaServer DS20 System Diagram Side and Back View

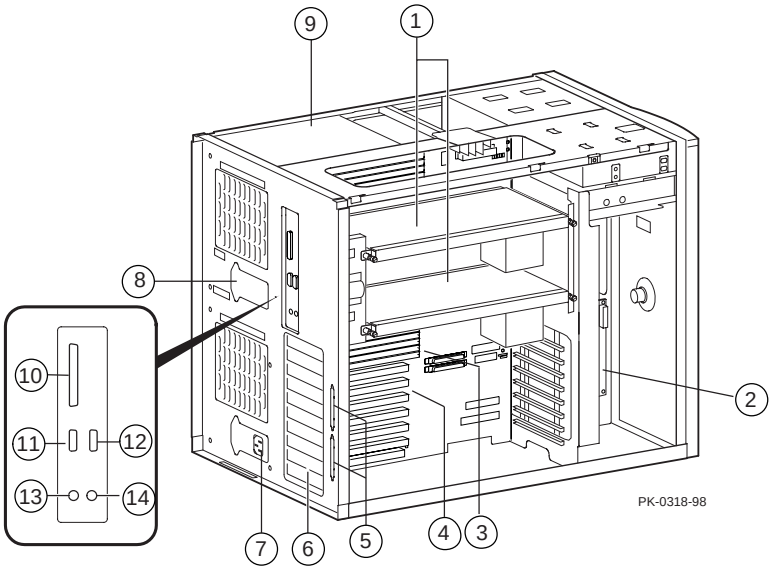

1. CPU modules
2. Server feature card
3. Memory DIMMs
4. PCI slots
5. SCSI breakouts
6. PCI/ISA bulkhead ports
7. Power inlet and power supply
8. Optional power inlet
9. Fan or optional power supply
10. Parallel port
11. Serial port (COM2)
12. Serial port (COM1)
13. Keyboard port
14. Mouse port

System Specifications

Shipping Dimension		
Height	60 cm (23.8 in.)	
Width	43 cm (16.9 in)	
Depth	65 cm (25.6 in)	
Weight	43 kg (95 lb) typical	
	71 kg (156 lb) maximum	
Installed Dimensions		
Height	46 cm (18.1 in.)	
Width	35.8 cm (14.1 in.)	
Depth	58.6 cm (23.1 in.)	
Weight	39 kg (86 lb) typical	
	51 kg (113 lb) maximum	
Clearances	**Operating**	**Service**
Front	75 cm (29.5 in.)	75 cm (29.5 in.)
Rear	15 cm (6 in.)	75 cm (29.5 in.)
Sides	None	75 cm (29.5 in.)
Environmental		
Temperature	Operating*	10–40° C (50–104° F)
	Rate of change	11° C/hr (20° F/hr)
	Nonoperating	-40–66° C (-40–151° F)
	Storage (60 days)	-40–66° C (-40–151° F)
	Rate of change	20° C/hr (36F/hr)
Relative humidity	Operating	10–90%
	Nonoperating	10–95%
	Storage (60 days)	10–95%
	Rate of change	20%/hr
Maximum wet bulb temperature	Operating	28° C (82° F)
	Storage (60 days)	46° C (115°F)
Minimum dew point temperature	Operating	2° C (36° F)
	Storage (60 days)	Not tested
Maximum heat dissipation	Current	
Dual supply	4097 Btu/hr	
Air flow and quality	Intake location	Front
	Exhaust location	Rear
	Particle size	N/A
	Concentration	N/A
Altitude	Operating†	3048 m (10,000 ft)
	Nonoperating	12192 m (40,000 ft)
Mechanical shock	Operating	10 G 10 ms
	Nonoperating	20 G peak 30 ms
Vibration	Operating	10-500 Hz .1 G peak
	Nonoperating	1.03Grms 5-300Hz
Acoustics		AverageDeclared
	Operating	5.7 L^{wA}, B 38 $L^{p}A^{m}$, dba
	Idle	5.6 L^{wA}, B 37 $L^{p}A^{m}$, dba
Electrical—Power Supplies are universal, PFC, auto Ranging, 100/240 Vac		
Nominal ac voltage	100-120 Vac	220-240 Vac
Operating Voltage range	90-128 Vac	180-256 Vac
Power source phase	Single	Single
Nominal frequency	60 Hz	50 Hz
Frequency range	59-61 Hz	49-51 Hz
Maximum inrush current per line core	11 Amps	22 Amps
RMS current (maximum)	12 Amps	5 Amps
Single power supply (Single cord set)	7.4 Amps each supply	3.7 Amps each supply
Dual power supply (Multiple cord set)	11.7 Amps @ 100Vac	4.9 Amps @ 220Vac
RMS current (typical)	9.3 Amps @ 120Vac	4.4 Amps @ 240Vac
Power cord	Type	IEC 320 C13
	Length	190 cm (75 in.)
	U.S. plug	NEMA 5-15

System Specifications *(continued)*

Regulatory	
Agency approvals	UL: Listed to UL1950 (3rd edition) CSA: Certified to CAN/CSA-C22.2 No. 950-M95 TUV: EN 60950 VDE 0805 GS marked FCC: Part 15.B Class A CE: EN55022, EN50082 VCCI Class II ITE BCIQ: CISPR22, CNS13438 C-Tick: CISPR22, AS/NZS 3548
Reviewed to	AS/NZ 3260:1993 Australian/New Zealand Standard EN 60950/A4: 1997 European Norm IEC 950 (2nd edition, 3rd amend)

* Maximum operating temperature at Sea Level. Reduce by 1 C (1.8 F) for each 600 m (2000 ft) above Sea Level.

† Higher altitudes are possible if maximum operating temperature is reduced (see Temperature, above); other restrictions may apply, such as maximum permissible altitude for hard drives.