AlphaServer DS20 Linux Ready
V1.0—29 March 1999
Systems and Options Catalog

Product Description

The Compaq AlphaServer DS20 is a 500MHz EV6 based Alpha microprocessor server with 4 MB level two cache. The AlphaServer DS20 supports two CPUs, and is available in Pedestal configurations without an operating system to allow the installation of Linux on these systems.

The AlphaServer DS20 system's high-reliability features include: hot swap disk drives, redundant power supplies, ECC memory, heat sensor, fan failure sensor, and power supply sensor. Integrated on the system motherboard is a diskette controller, two serial ports, one parallel port, and keyboard and mouse controller.

AlphaServer DS20 Pedestal System supports up to 10 internal storage devices including one floppy diskette drive, one CD-ROM, one additional 5.25-inch removable media device, and seven hot swap StorageWorks disk drives. The system supports up to 128 GB of internal storage with seven 18.2 GB disk drives.

System Ordering Rules

- AlphaServer DS20 systems require the mandatory selection of: a system disk, two SCSI ports, and a network adapter. Users can select 4.3 GB, 9.1 GB, or 18.2 GB disk drive as the system disk.
- To order a complete system select: (1) a system, (2) a system disk, (3) two SCSI ports, and (4) an Ethernet Adapter.

Compaq and the names of Compaq products referenced herein are either trademarks and/or service marks or registered trademarks and/or service marks of Compaq.

DIGITAL is a Trademark of Compaq Computer Corporation.

Microsoft, Windows, Windows NT, SQL Server, Office and BackOffice are either trademarks or registered trademarks of Microsoft Corporation.

Intel and Pentium are registered trademarks of Intel Corporation. Linux is a registered trademark of Linus Torvalds in several countries.

Other product and company names mentioned herein may be trademarks and/or service marks of their respective owners.

Step 1—AlphaServer DS20 Pedestal Systems

Configuration menus require the mandatory selection of:

- LINUX system from Step 1a
- Mandatory components:
  - One system disk drive
  - Two SCSI ports[1]
  - One Ethernet adapter

1. Two SCSI ports are required for internal removable media devices, and internal StorageWorks disk shelf operating in single-bus mode. **Note:** One additional SCSI port and an H8253-AA UltraSCSI bus splitter kit are required to operate StorageWorks disk shelf in split-bus mode.

Pedestal Systems include

- Alpha microprocessor 21264 500 MHz CPU with 4 MB ECC onboard cache.
- Pedestal enclosure with:
  - 6 expansion slots
    Five 64 bit PCI slots and one 64-bit PCI/ISA combination slot
  - 16 DIMM memory slots support 3 memory options
  - 10 storage slots
    One diskette drive slot (1.44MB diskette drive included)
    One 600 MB 32X CD-ROM drive slot (CD-ROM included)
    One additional removable media slot
    Seven StorageWorks hard drive slots.
  - Two serial ports, support full duplex asynchronous modem control
  - One bi-directional enhanced parallel port
  - PS/2 style keyboard port and mouse port.
  - 675 Watt self-switching (120/240V, 60/50Hz) power supply[1].
- 1.44 MB diskette drive in dedicated slot.
- 600 MB 32X CD-ROM—uses one removable media slot.
- 128 MB, 256 MB, or 512 MB.
- 3-button mouse.
- U.S. English keyboard and 120V power cord with North America orders.
- Selection of a country-specific keyboard and power cord is mandatory for all non-North American orders.
- Hardware Warranty: Three-year onsite.

1. Included power supply provides power for normal system operation. System supports an additional optional power supply for N+1 redundancy.

Step 1a—Compaq AlphaServer DS20 OS-less Pedestal System

- Systems ordered in North America include U.S. English keyboard and 120 V power cord. Selection of a country-specific keyboard and power cord is mandatory for all non-North American orders.
- System has been tested with Red Hat 5.2 and requires kernel 2.2.x.

Compaq 6/500 MHz CPU Pedestal System without Operating System Software

Note: Pedestal systems have six available PCI slots. Installation of mandatory options and recommended graphics reduces available PCI slots.

Order Number	Memory	2 SCSI Ports	Hard Disk Drive	Network Adapter	Graphics[1]	Monitor
DJ-55NJA-CA	128 MB	Mandatory	Mandatory	Mandatory	Recommended	Recommended
DJ-55NJA-DA	256 MB	Mandatory	Mandatory	Mandatory	Recommended	Recommended
DJ-55NJA-EA	512 MB	Mandatory	Mandatory	Mandatory	Recommended	Recommended

Step 1b—Mandatory Options

- Selection of a minimum of two SCSI ports, a system disk drive, and a Network Adapter is **mandatory**.
- Additional options are supported, select as required.

Select one system disk drive—Mandatory

Order Number	System Disk
DS-RZ1CF-VW	4.3 GB 7200 RPM UltraSCSI disk
DS-RZ1DF-VW	9.1 GB 7200 RPM UltraSCSI disk
DS-RZ1EF-VW[1]	18.2 GB 7200 RPM UltraSCSI disk

Select two SCSI ports—Mandatory

- Two SCSI ports are mandatory to support internal storage:
  - Internal removable media devices are supported on KZPCM-DA and KZPBA-CA adapters only. Internal StorageWorks seven disk shelf requires one SCSI port when configured in single-bus mode[1]
- System includes SCSI cable(s) to connect SCSI adapters/controllers to internal storage.

1. To configure StorageWorks disk shelf in split-bus mode one addition SCSI port is required.

The requirement of two SCSI ports can be fulfilled by ordering:

- One KZPCM-DA two port UltraSCSI single-ended adapter, or
- Two KZPBA-CA one port UltraSCSI single-ended adapter

Order Number	SCSI Adapter
KZPCM-DA	PCI-based two port UltraSCSI Single-ended adapter and 10/100 Mbit Ethernet Combo adapter
KZPBA-CA	PCI-based one port UltraSCSI Single-ended adapter

Select one Ethernet Adapter—Mandatory

Note: Ethernet adapter is not required if KZPCM is selected as the SCSI adapter.

Order Number	Network Adapter and Minimum O/S version supported
DE500-BA	PCI-based 10/100 Mbit Fast Ethernet adapter UTP
DE504-BA	PCI-based 10/100 Mbit Quad Channel Ethernet adapter

Step 2—Additional CPU Modules (SMP Add-ons and Upgrades)

AlphaServer DS20 system supports one additional CPU.

3X-KN310-AD SMP upgrade includes one 6/500 CPU. Linux SMP support must be obtained separately. Required Linux Kernel 2.2.x

Step 3—Memory

- System supports up to four memory kits (each kit includes 4 industry-standard ECC DIMMs).
- System includes one memory kit.
- System supports three additional memory kits for a system maximum of 2 GB memory

MS340-BA 128 MB(4 x 32 MB DIMMs) memory kit

MS340-CA 256 MB(4 x 64 MB DIMMs) memory kit

MS340-DA 3(4 x 128 MB DIMMs) memory kit

Step 4—Internal Storage

Pedestal Enclosure supports a total of ten storage devices:

- One dedicated diskette drive slot (1.44 MB diskette drive included).
- One 5.25” removable media slot (600 MB 32X CD-ROM included).
- One 5.25” additional removable media slot.
- Seven 3.5-inch internal hard disk drive slots.

Internal Storage Disk Drives

- Selection of one System Disk Drive is mandatory.
- Up to six additional hard disk drives are supported in internal storage disk shelf.

Note: Internal storage disk shelf is configured in single-bus mode. To configure internal storage disk shelf in split-bus mode one additional SCSI port and an H8253-AA UltraSCSI bus splitter kit are required.

DS-RZ1CF-VW	4.3 GB 7200 RPM UltraSCSI disk drive
DS-RZ1DF-VW	9.1 GB 7200 RPM UltraSCSI disk drive
DS-RZ1EF-VW	18.2 GB 7200 RPM UltraSCSI disk drive

Internal UltraSCSI Cable Kit

H8253-AA	UltraSCSI bus splitter kit includes SCSI bus repeater card, two data cables, Y power cable harness, and SCSI active terminator assembly, and installation guide. Required to configure internal storage shelf in split bus mode.

Internal Removable Media Devices

- Systems include CD-ROM drive in 5.25” half-height removable media slot.
- Systems support one additional 5.25” half-height removable media device.

RRD47-VD	600 MB 32X CD-ROM drive (RRD47) 5.25” Top Gun Blue

Step 5—External Storage

UltraSCSI Configuration Rules

- UltraSCSI configurations require UltraSCSI components (controllers, adapters, shelves, disks, and cables).
- UltraSCSI adapters support UltraSCSI disks at UltraSCSI speeds in UltraSCSI Top Gun Blue shelves (DS-BA356-xx).
- Fast10 BA356-xx SCSI shelves can not be retrofitted. Replace Fast10 SCSI shelf with DS-BA356-xx shelf when adding an UltraSCSI disk and when connecting to UltraSCSI adapter.
- UltraSCSI and Fast10 drives can be mixed in DS-BA356 Top Gun Blue UltraSCSI shelf. UltraSCSI adapter negotiates maximum transfer speed of drives.

UltraSCSI Connectors and Cables

- KZPBA-CA PCI one port UltraSCSI Single-ended adapter, 68HD connector, requires BN38C cables (2 to 20 m) to connect to UltraSCSI shelf.
- KZPBA-CB PCI one port UltraSCSI Differential adapter, 68HD connector, requires BN38C cables (2 to 25 m) to connect to UltraSCSI shelf.
- KZPCM-DA PCI two port UltraSCSI Single-ended adapter and 10/100M-bit Ethernet Combo adapter. Internal 68-pin and 50-pin HD connectors and two external 68-pin VHDCI connectors

BN38C VHDCI to 68HD Cables—KZPBA UltraSCSI adapter to UltraSCSI shelf

BN38C-xx	VHDCI male to 68HD male. xx=2, 3, 5, 10, and 20 meter lengths

Step 5—External Storage *(continued)*

BN37A VHDCI to VHDCI Cables— KZPCM UltraSCSI adapter to UltraSCSI shelf

BN37A-0C	0.3 m VHDCI male to VHDCI male
BN37A-0E	0.5 m VHDCI male to VHDCI male
BN37A-01	1.0 m VHDCI male to VHDCI male
BN37A-1E	1.5 m VHDCI male to VHDCI male
BN37A-02	2.0 m VHDCI male to VHDCI male
BN37A-2E	2.5 m VHDCI male to VHDCI male
BN37A-xx	3.0 m VHDCI male to VHDCI male. xx=3, 5, 10, 15, 20, and 25 meter lengths

UltraSCSI StorageWorks Pedestals and Shelves

UltraSCSI Top Gun Blue shelf provides support for UltraSCSI disk drives. Shelf is available in single-bus or split-bus configurations. Shelf includes a personality module and a 180 W power supply.

UltraSCSI shelf supports:

- Seven 3.5-inch hard disk drives, or
- One 5.25-inch device and four 3.5-inch hard disk drives, or
- Two 5.25-inch devices and one 3.5-inch hard disk drive.

Note: Installation of redundant power supply reduces number of 3.5” drive slots by one.

Pedestal Enclosure

DS-BA356-KF	UltraSCSI single-ended pedestal, single-bus personality module, 180 W power supply
DS-BA356-KG	UltraSCSI single-ended pedestal, split-bus personality module, 180 W power supply
DS-BA356-KH	UltraSCSI pedestal, differential personality module, 180 W power supply
DS-BA35X-HH	180 W power supply

Step 5a—Storage Controllers

- Selection of two SCSI ports is mandatory for internal storage, see Step 1b.

Order Number	Description
KZPCM-DA	PCI-based two port UltraSCSI Single-ended adapter and 10/100Mbit Ethernet Combo adapter, uses 1 PCI slot. Internal 68-pin and 50-pin HD connectors and two external 68-pin VHDCI SCSI connectors.
KZPBA-CB	PCI one port UltraSCSI Differential adapter, 68HD connector, requires BN38C cables (2 to 25 m) to connect to UltraSCSI shelf.
KZPBA-CA	PCI one port UltraSCSI Single-ended adapter, 68HD connector, requires BN38C cables (2 to 20 m) to connect to UltraSCSI shelf
BN37A-xx	VHDCI male to VHDCI male UltraSCSI cable; required for each external UltraSCSI shelf attached to KZPCM.

Step 6—Monitors

Graphics monitors other than those listed below can be used if compatible with SVGA graphics ordered with a system.

Note: Selection of a video extension cable and a country specific power cord is mandatory for all monitor variants.
See Step 6a for video extension cable
See Step 6b for country specific power cords

SN-VRQV5-24/23 15" (13.8" viewable image size) Corporate Series auto-scan color monitor, flat square Invar CRT, 0.28 mm dot pitch, VGA to 1024 x 768 @ 75 Hz, TCO 95, MPRII, Energy Star, attached 1.8 meter video cable. Requires mandatory selection of video extension cable and country specific power cord for all variants.
–24 = Northern Hemisphere without power cord
–23 = Southern Hemisphere without power cord

Step 6—Monitors *(continued)*

SN-VRQP7-24/23 17” (16.0” viewable image size) professional series auto-scanning color monitor, Trinitron CRT, 0.25 mm aperture grill pitch, VGA to 1280 x 1024 at 75 Hz, TCO 95, MPR-II, Energy Star, attached 1.8 meter video cable. Requires mandatory selection of video extension cable and country specific power cord for all variants.
–24 = Northern Hemisphere without power cord
–23 = Southern Hemisphere without power cord

SN-VRQP1-24/23 21" (19.6" viewable image size) auto-scanning color monitor, Trinitron CRT, 0.25 mm aperture grill pitch, VGA to 1600 x 1200 at 75 Hz NI, TCO 95, Energy Star, includes a 1.8 meter video cable. Requires mandatory selection of video extension cable and country specific power cord for all variants.
–24 = Northern Hemisphere without power cord
–23 = Southern Hemisphere without power cord

Step 6a—Video Extension Cable

BN39C-02 1.8 meter video extension cable—mandatory for each monitor ordered

Step 6b—Monitor Power Cords

BN26J-1K North American, Japan, 120 V, 75 inches long
BN19H-2E Australia, New Zealand, 2.5m long
BN19C-2E Central Europe, 2.5 m long
BN19A-2E UK, Ireland, 2.5 m long
BN19E-2E Switzerland, 2.5 m long
BN19K-2E Denmark, 2.5 m long
BN19M-2E Italy, 2.5 m long
BN19S-2E Egypt, India, South Africa, 2.5 m long
BN18L-2E Israel, 2.5 m long

Sep 7—Graphics Adapters

- Select graphics adapter, monitor, and country specific keyboard for Linux if required.
- System supports maximum of one graphics adapter.

SN-PBXGK-AA Powerstorm 4D10T 4MB graphics adapter

Step 8—Networks and Communications

Order Number	Description
DE500-BA	PCI-based 10/100-Mbit 1 port Fast Ethernet controller (Twisted Pair)
DE504-BA	PCI-based 10/100-Mbit 4 Port Fast Ethernet controller (Twisted Pair)
BN25G-xx	Cable for 10BaseT Twisted Pair connection

Step 9—Additional Power Supply

- One additional power supply may be added to AlphaServer DS20 Pedestal system for N+1 redundancy.
- Redundant Power Supply requires a country-specific power cord.

H7899-AA 675 W Redundant Power Supply Option, requires country-specific power cord

Step 10—Keyboards, Power Cords, and Documentation

Keyboards

Systems ordered in North America include U.S. English keyboard and 120V power cord. Selection of a country-specific keyboard and power cord is mandatory for all non-North American orders.

Compaq Keyboard	Country
SN-LKQ47-AA	US/English
SN-LKQ47-AB	Belgian
SN-LKQ47-AC	Canadian/French
SN-LKQ47-AD	Danish
SN-LKQ47-AE	UK
SN-LKQ47-AF	Finnish
SN-LKQ47-AG	German
SN-LKQ47-AI	Italian
SN-LKQ47-AK	Swiss/French
SN-LKQ47-AM	Swedish
SN-LKQ47-AN	Norwegian
SN-LKQ47-AP	French
SN-LKQ47-AR	Latin-American
SN-LKQ47-AS	Spanish
SN-LKQ47-AV	Portuguese
SN-LKQ47-AX	Bhcsy
SN-LKQ47-BA	International
SN-LKQ47-BH	Greek
SN-LKQ47-BI	Taiwanese
SN-LKQ47-BK	Korean
SN-LKQ47-BP	Polish
SN-LKQ47-BQ	Hungarian
SN-LKQ47-BR	Arabic
SN-LKQ47-BT	Cyrillic
SN-LKQ47-BU	Turkish
SN-LKQ47-BV	Czech
SN-LKQ47-CB	Thai
SN-LKQ47-CZ	Slovak

Pedestal Power Cords

Systems ordered in North America include one BN26J-1K 120 V North American power cords. Order one country specific power cords for all systems ordered in Europe and AP.

BN26J-1K	North American, Japan, 120 V, 75 inches long
BN19H-2E	Australia, New Zealand, 2.5m long
BN19C-2E	Central Europe, 2.5 m long
BN19A-2E	UK, Ireland, 2.5 m long
BN19E-2E	Switzerland, 2.5 m long
BN19K-2E	Denmark, 2.5 m long
BN19M-2E	Italy, 2.5 m long
BN19S-2E	Egypt, India, South Africa, 2.5 m long
BN18L-2E	Israel, 2.5 m long

Step 10—Keyboards, Power Cords, and Documentation *(continued)*

Documentation

QZ-014AA-GZ	Additional AlphaServer DS20 User Guide (print and CD), Installation Card, and Release Notes

Step 11—Printers and Remote Console

Systems include two full duplex asynchronous serial ports and one bi-directional enhanced parallel port.

Asynchronous serial ports have 9-pin D-subminiature connectors. A 9-pin to MMJ adapter (H8571-J) is required for each connection. See printer section of *Systems and Options Catalog* for serial and parallel printer information.

Step 12—Software

Operating system software is not supplied with this system.

See the AlphaServer DS20 Linux-Ready web site for more details: http://www.digital.com/alphaserver/linux/index.html

Step 13—Hardware Support Services

Hardware—Americas and Asia Pacific only

- Systems include three-year hardware warranty, onsite with 5 x 9, 24-hour response time.
- Option order as part of the Initial System Sale take on the Warranty of the enclosure
- Option added after the Initial System Sale take on the Warranty of the enclosure until the enclosure warranty ends.
- All unique AlphaServer DS20 options have a minimum of 1 Year Return to Compaq Warranty.
- Select optional Hardware Supplemental Support Services if required.

FM-TC4HR-36	5 x 9, 4-hour response time
FM-TC512-36	5 x 12, 4-hour response time
FM-TC616-36	6 x 16, 4-hour response time
FM-TC724-36	7 x 24, 4-hour response time
FM-TCXHW-60	Years 1-5, next day, Onsite
FM-TC4HR-60	Years 1-5, 5x9, 4-hour response time
FM-TC512-60	Years 1-5, 5x12, 4-hour response time
FM-TC616-60	Years 1-5, 6x16, 4-hour response time
FM-TC724-60	Years 1-5, 7x24, 4-hour response time

Step 13a—Hardware and Software Supplemental Support Services (Europe only)

Europe does **not** have specific part numbers for Hardware. Prices are quoted based on worldwide service reference pricing, contact MCS Sales in your country for information on Hardware Support Services.

AlphaServer DS20 System Diagram Front View

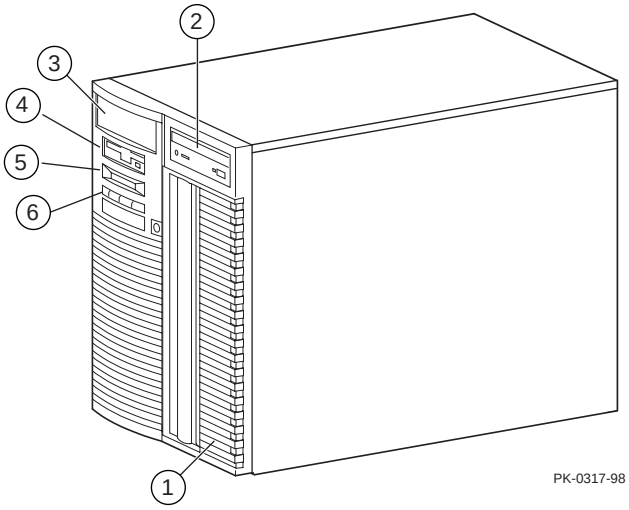

1. StorageWorks shelf for hard disk drives
2. SCSI CD-ROM drive
3. Optional removable media drive bay
4. Floppy diskette drive
5. Control panel display
6. Control panel switches

AlphaServer DS20 System Diagram Side and Back View

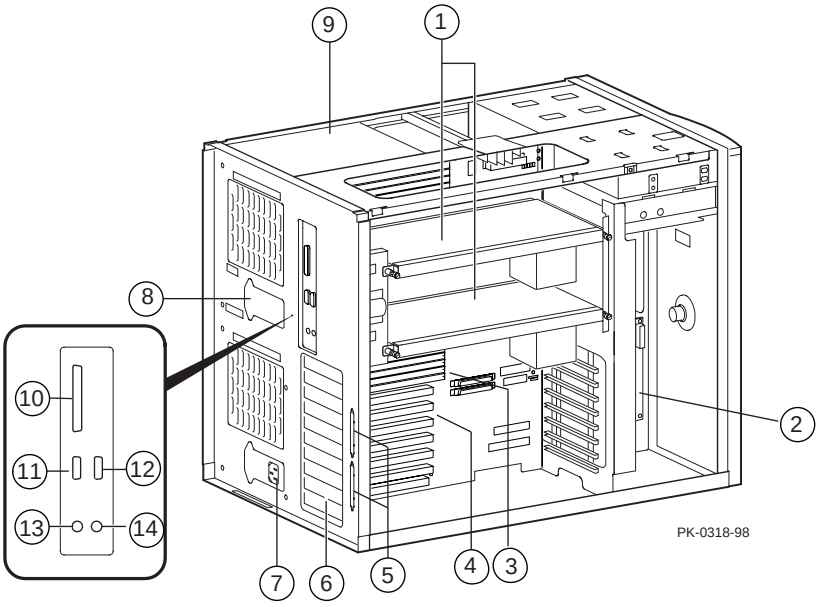

1. CPU modules
2. Server feature card
3. Memory DIMMs
4. PCI slots
5. SCSI breakouts
6. PCI/ISA bulkhead ports
7. Power inlet and power supply
8. Optional power inlet
9. Fan or optional power supply
10. Parallel port
11. Serial port (COM2)
12. Serial port (COM1)
13. Keyboard port
14. Mouse port

System Specifications

Shipping Dimension		
Height	60 cm (23.8 in.)	
Width	43 cm (16.9 in)	
Depth	65 cm (25.6 in)	
Weight	43 kg (95 lb) typical	
	71 kg (156 lb) maximum	
Installed Dimensions		
Height	46 cm (18.1 in.)	
Width	35.8 cm (14.1 in.)	
Depth	58.6 cm (23.1 in.)	
Weight	39 kg (86 lb) typical	
	51 kg (113 lb) maximum	
Clearances	**Operating**	**Service**
Front	75 cm (29.5 in.)	75 cm (29.5 in.)
Rear	15 cm (6 in.)	75 cm (29.5 in.)
Sides	None	75 cm (29.5 in.)
Environmental		
Temperature	Operating*	10–40° C (50–104° F)
	Rate of change	11° C/hr (20° F/hr)
	Nonoperating	-40–66° C (-40–151° F)
	Storage (60 days)	-40–66° C (-40–151° F)
	Rate of change	20° C/hr (36F/hr)
Relative humidity	Operating	10–90%
	Nonoperating	10–95%
	Storage (60 days)	10–95%
	Rate of change	20%/hr
Maximum wet bulb temperature	Operating	28° C (82° F)
	Storage (60 days)	46° C (115°F)
Minimum dew point temperature	Operating	2° C (36° F)
	Storage (60 days)	Not tested
Maximum heat dissipation	Current	
Dual supply	4097 Btu/hr	
Air flow and quality	Intake location	Front
	Exhaust location	Rear
	Particle size	N/A
	Concentration	N/A
Altitude	Operating†	3048 m (10,000 ft)
	Nonoperating	12192 m (40,000 ft)
Mechanical shock	Operating	10 G 10 ms
	Nonoperating	20 G peak 30 ms
Vibration	Operating	10-500 Hz .1 G peak
	Nonoperating	1.03Grms 5-300Hz
Acoustics		AverageDeclared
	Operating	5.7 L^{wA}, B 38 $L^{p}A^{m}$, dba
	Idle	5.6 L^{wA}, B 37 $L^{p}A^{m}$, dba
Electrical—Power Supplies are universal, PFC, auto Ranging, 100/240 Vac		
Nominal ac voltage	100-120 Vac	220-240 Vac
Operating Voltage range	90-128 Vac	180-256 Vac
Power source phase	Single	Single
Nominal frequency	60 Hz	50 Hz
Frequency range	59-61 Hz	49-51 Hz
Maximum inrush current per line core	11 Amps	22 Amps
RMS current (maximum)	12 Amps	5 Amps
Single power supply (Single cord set)	7.4 Amps each supply	3.7 Amps each supply
Dual power supply (Multiple cord set)	11.7 Amps @ 100Vac	4.9 Amps @ 220Vac
RMS current (typical)	9.3 Amps @ 120Vac	4.4 Amps @ 240Vac
Power cord	Type	IEC 320 C13
	Length	190 cm (75 in.)
	U.S. plug	NEMA 5-15

System Specifications *(continued)*

Regulatory	
Agency approvals	UL: Listed to UL1950 (3rd edition) CSA: Certified to CAN/CSA-C22.2 No. 950-M95 TUV: EN 60950 VDE 0805 GS marked FCC: Part 15.B Class A CE: EN55022, EN50082 VCCI Class II ITE BCIQ: CISPR22, CNS13438 C-Tick: CISPR22, AS/NZS 3548
Reviewed to	AS/NZ 3260:1993 Australian/New Zealand Standard EN 60950/A4: 1997 European Norm IEC 950 (2nd edition, 3rd amend)

* Maximum operating temperature at Sea Level. Reduce by 1 C (1.8 F) for each 600 m (2000 ft) above Sea Level.

† Higher altitudes are possible if maximum operating temperature is reduced (see Temperature, above); other restrictions may apply, such as maximum permissible altitude for hard drives.