CS20

Quick Start Installation Guide

www.api-networks.com

51-0062-0A

A Tour of the CS20 System

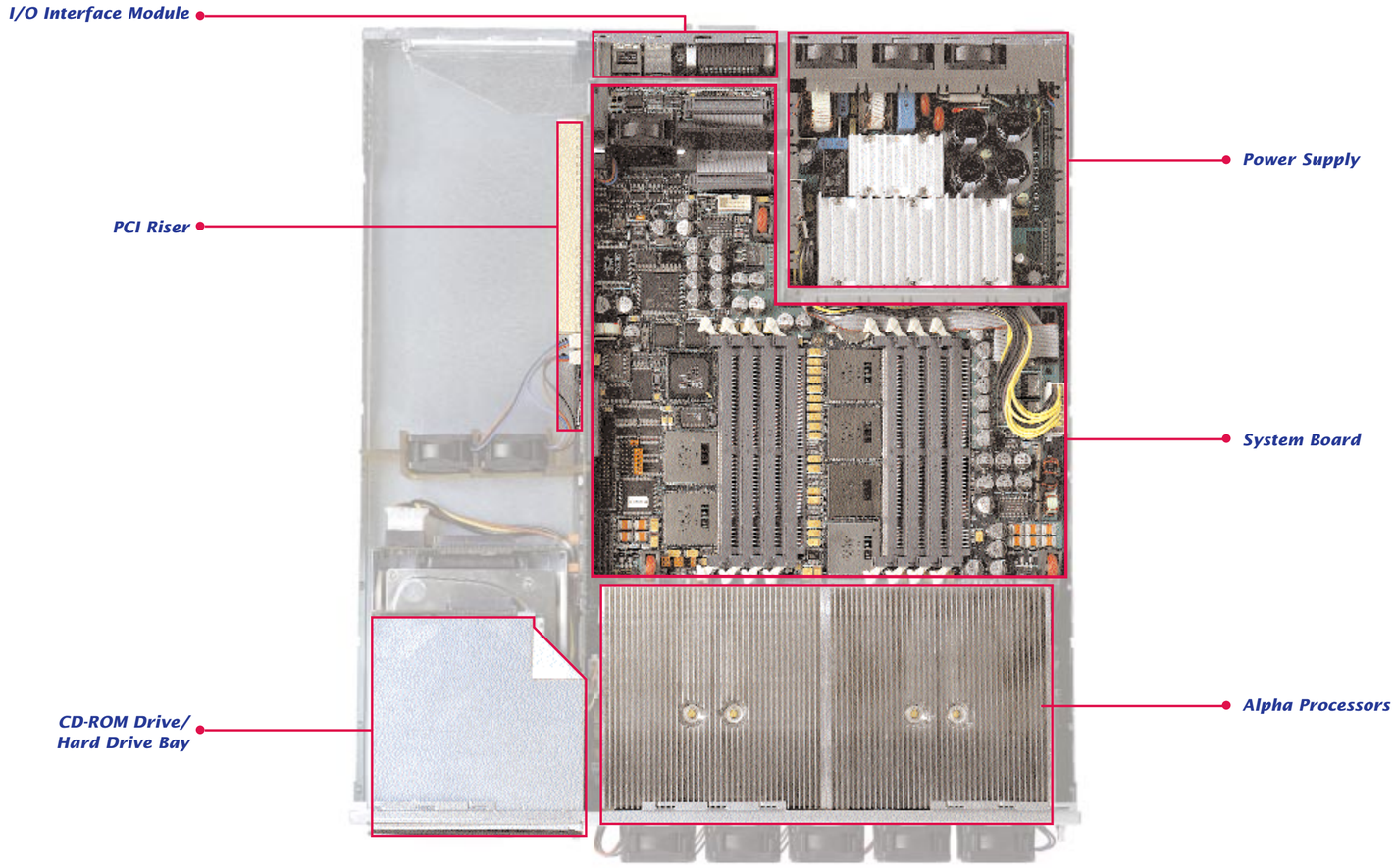

B Unpack & Set Up

The CS20 system from API NetWorks, Inc. is configured as a dual-processor system.

Remove the components carefully from their cartons and anti-static packaging bags. Always take appropriate electrostatic discharge safety measures when handling boards or modules.

NOTE: System setup and installation requires the use of both a Phillips-head and a flat-head screwdriver.

The CS20 product is shipped with the following items:

- CS20 System
- Accessory Kits, including Disk Carrier Kit and Rack-Mount Kit
- Disk Carrier Kit for SCSI:
  - Four 6-32 UNC screws
  - Drive carrier left and right arms
  - Drive handle
  - Four tension clips
  - SCSI disk cable
  - SCSI backplane
- Rack-Mount Kit:
  - Two M3 screws
  - Eight shoulder screws
  - Four chassis slides
  - Two rackmount front and two rackmount rear slides
  - Two chassis-locking brackets
- Front Hard Disk Assembly
- Documentation Kit:
  - ***CS20 Quick Start Installation Guide*** (this document)
  - ***CS20 System Guide*** **(51-0064-0A)**

C Cover Removal

The CS20 system ships with a cover and bezel in place. Before you can access the system to install devices, you must first remove the bezel and cover.

1. To remove the bezel, insert a finger into the finger guides on each end of the bezel and pull the bezel away from the box to expose the front of the system.
2. Set the bezel aside for later replacement.
3. Remove the Phillips-head screw at the back of the system.
4. Remove the chassis slides and lock bracket.
5. Slide the cover back and lift it off from the system.

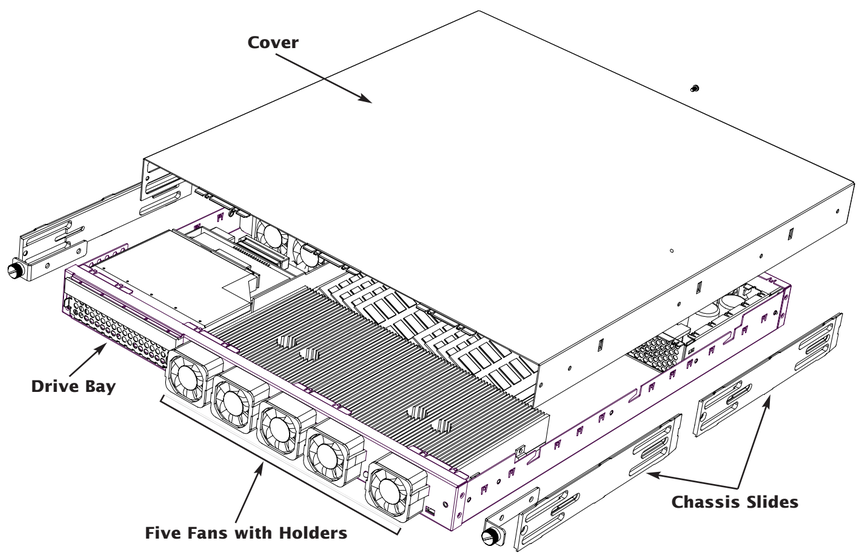

D Installation of Memory DIMMs

Memory Configuration

The memory subsystem is composed of:

- Two DIMM banks, designated Bank 0 and Bank 1.
- Each bank has four slots (sockets) that accept **168-pin, PC100 SDRAM PLL Registered/Buffered based SPD DIMMs**.
- Slots are configured in an *alternating* pattern.

Before installing DIMMs, carefully review the picture and guidelines below.

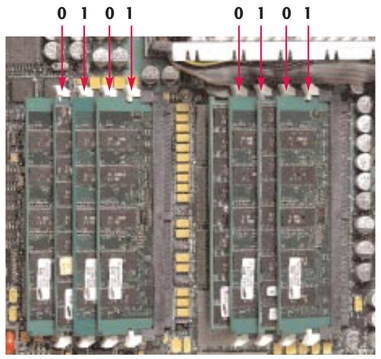

Memory Guidelines

- A bank **must** be fully populated (all four slots in one bank must be filled).
- Bank 0 **must** be populated first.
- A bank **must** utilize the **same** type, size, and speed DIMMs.
- Bank 0 and Bank 1 do **not** have to have same type, size, and speed DIMMs.
- Memory is supported in a size range between 256 MB (min) to 2 GB (max).

Some typical memory bank configurations

Total System Memory	Bank 0	Bank 1
256 MB	64 MB x 4	
512 MB	64 MB x 4	64 MB x 4
768 MB	128 MB x 4	64 MB x 4
1 GB	128 MB x 4	128 MB x 4
2 GB	256 MB x 4	256 MB x 4

E Installation of PCI Devices

Install PCI Devices

Follow these steps to install PCI devices:

1. Remove PCI clamping bracket screw and bracket.
2. Remove PCI blanking panel.
3. Install PCI device.

NOTE: Ensure that the RFI shield is positioned correctly.

4. Replace PCI clamping bracket and screw.

F Installation of PCI Devices

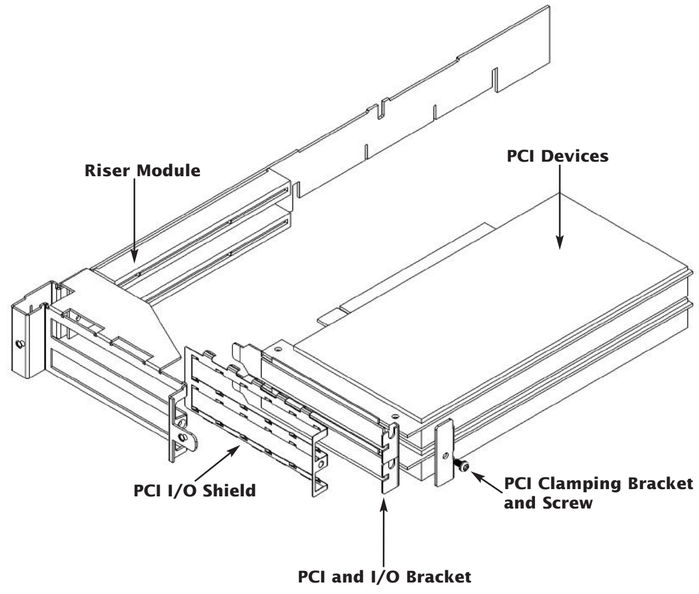

Follow these steps to replace the system cover:

1. Slide the cover into place.
2. Replace and tighten the screws in the back of the system.
3. Screw the four supplied chassis slides and rack brackets onto the system sides.
4. The system is now ready for rack mounting.

G Installation of Rear-Panel I/O

Rear-Panel I/O Connections

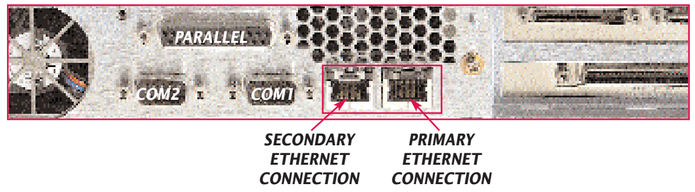

The rear-panel of the CS20 system includes a parallel port, COM1 and COM2 ports, and two Ethernet connections (one Primary and one Secondary), as shown.

Remote system management is handled through the primary Ethernet port.

H Installation of SCSI Hard Drive

Follow these steps to install the SCSI hard drive:

NOTES:
- This installation can be done while the system cover is in place.
- The drawing shows the cover off for informational purposes only.
- Use only a 1-inch-high SCA SCSI drive.

1. Assemble the drive carrier.
2. Insert the drive into the carrier.
3. Secure the drive with the tension clips and screws provided.
4. Remove chassis cover.
5. Install SCSI backplane and cable.

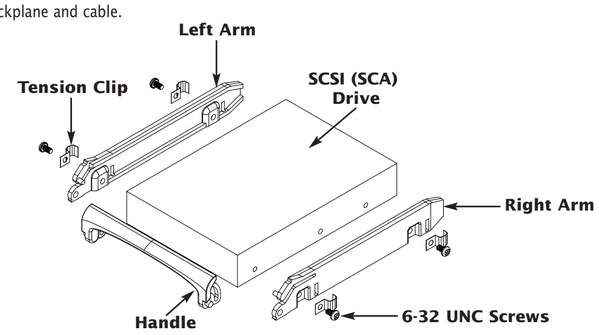

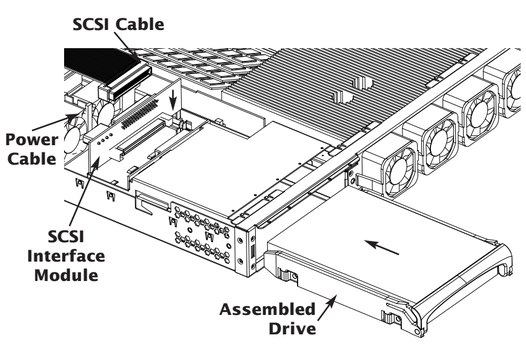

I Removal of SCSI Hard Drive

Follow these steps to remove the hard drive:

1. Rotate the handle on the drive carrier to a downward position.
2. Grip the handle, and pull the drive carrier out of the system.

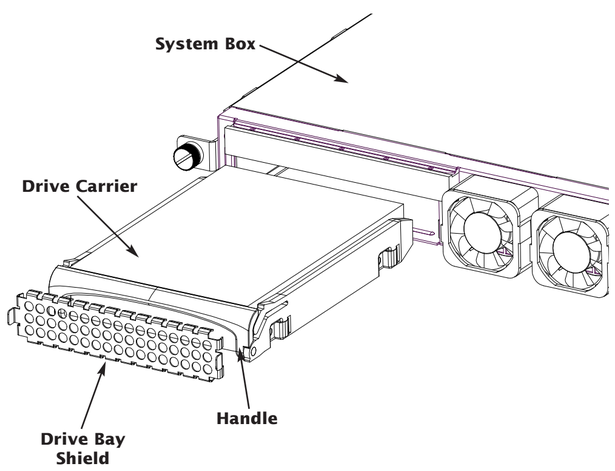

J Final Tasks

Follow these steps to replace the bezel:

1. Grip both ends of the bezel with the finger grips.
2. Push the bezel onto the system, and engage the ball studs into the bezel clips.

Reference Materials

For procedures on booting the CS20 and other information, see the ***CS20 System Guide*, 51-0064-0A**.

A copy of the *CS20 User Manual* is also available from our website: **http://www.api-networks.com**

Also, refer to the AlphaLinux website: **http://www.alphalinux.org**